IAEA - 115

FOREWORD

The IAEA's programme in nuclear power places great emphasis on production, utilization and reprocessing of different types of nuclear materials which together constitute the key to economic nuclear power. During 1968-1969 the Agency held a number of panels and symposia on the nuclear fuel cycle, among them: Sol-gel processes for ceramic nuclear fuels, thorium utilization, plutonium utilization, economics of nuclear fuels.

At present both advanced and developing countries are intensifying their programme concerned with nuclear power. Thus, while the total installed nuclear capacity in 1965 was equal to 6285 MW(e), in 1970 it is anticipated to be about 23 000 MW(e).

This quick progress in nuclear power depends upon successfully dealing with different types of problems, one of them being the reprocessing of highly irradiated fuels.

Much of the current fuel reprocessing development work now is directed towards reprocessing fuels that are highly radioactive because of both higher irradiation levels and shorter cooling times. The problem of reprocessing highly radioactive fuel is very important not only for the fast reactor fuel cycle, but also for the thermal reactors, because of the promising developments towards achieving a higher burn-up and the economic incentives for a shorter cooling time.

As part of its programme on nuclear fuel cycle, the International Atomic Energy Agency convened a panel of experts from 27-30 May 1969 to review the available information on various aspects of aqeuous and non-aqueous reprocessing of nuclear fuel elements with high radioactivity level, both from fast reactors and from advanced types of thermal reactors.

The proceedings of this panel, presented in this document, include review and topical papers on the development of the reprocessing of highly irradiated fuels in various countries and Summary and Recommendations of the Panel to the IAEA.

The Agency wishes to express its appreciation to the authors of papers, to all the participants who made spirited contributions to the discussions which contributed to the success of the meeting, and to the Chairman Prof. M. Zifferero for guiding the work of the panel.

TABLE OF CONTENTS

Foreword 3
Contents 5
Treatment of highly irradiated plutonium-aluminium alloy targets to produce transplutonium elements 7
A. Chesne and R. Berger
Treatment of the oxides of slightly enriched uranium – the French contribution to the Japanese plant project 21
G. Lefort and M. de Rubercy
Treatment of fuels for fast neutron reactors – treatment of irradiated fuel needles from Rapsodie 45
X. Talmont and P. Miquel
Apparatus for the treatment of highly irradiated fuels 59
P. Michel and J. Dollfus
Treatment of enriched uranium alloys by the halide volatilization method experiences on irradiated fuels 79
M. Bourgeois and M. Perrot
Chemical treatment of highly irradiated fuels 99
P. Faugeras and J. Sauteron
Status of work in the United Kingdom 115
B.F. Warner
Fuel reprocessing in India: experience and programme 129
N. Srinivasan
Reprocessing of highly irradiated fuels – some alternatives 137
N. Srinivasan
Pyrochemical separation and extraction of plutonium in highly irradiated ceramic fuels 149
A. Avogadro and J.G. Wurm
Liquid metal decanning of highly irradiated UO_2-PuO_2 stainless steel clad fuels 167
J.G. Wurm and M. Payrissat
Development of combined aqueous reprocessing procedures for thorium-containing fuel elements 201
E. Merz et al.
Status of reprocessing of highly radioactive fuels in the USA 225
J.A. Buckham
Control of fission product activity during short-cooled fuel processing connected with the ICPP Rala Process 247
J.R. Bower and J.A. Buckham
Effect of irradiation on the dissolution characteristics of important f fuel and cladding materials 257
K.L. Rohde and J.A. Buckham
Fast contactors in the WAK 267
W. Knoch and B. Roth
Flowsheet studies on processing of plutonium fuels by solvent extraction 289
G. Koch, W. Ochsenfeld, and E. Schwind

Present status and organization of advanced fuel reprocessing in
the Federal Republic of Germany 311
W. Schüller

Reprocessing of Japan Experimental Fast Reactor Fuel in
Purex Reprocessing Plant 327
S. Sato, T. Hoshino and K. Naito

Perspectives of reprocessing of highly irradiated nuclear fuels
by extraction method 351
B.V. Chevchenko

The Chemical processing of highly irradiated fuels 383
M. *Ziffero*

List of Participants 387

TRAITEMENT DES CIBLES D'ALLIAGE PLUTONIUM–ALUMINIUM FORTEMENT IRRADIEES EN VUE DE LA PRODUCTION D'ELEMENTS TRANSPLUTONIENS

André CHESNE et René BERGER

COMMISSARIAT A L'ENERGIE ATOMIQUE
Direction des Matériaux et Combustibles Nucléaires
Département de Chimie
Services de Chimie des Combustibles Irradiés
Section d'Etudes Chimiques Radioactives

ABSTRACT

Four elements containing altogether 20.95 g of plutonium in the form of a 10% Pu plutonium-aluminium alloy were irradiated in the EL3 reactor up to an integrated flux of 5×10^{21} n/cm^2. The elements were treated in the "Pétrus" cell at Fontenay-aux-Roses. The procedure is original in that it used nitric acid medium for all the operations and trilaurylamine (TLA) for separation of plutonium. The treatment comprises:

- Dissolving the annular elements in sodium hydroxide and/or nitric acid;
- Separation of plutonium in two cycles of extraction with TLA (5 vol.%) in nitric acid medium, each cycle being followed by re-extraction with a nitrosulphuric solution;
- Separation of the transplutonium elements in two cycles of extraction with D_2EHPA (8 vol.%), each consisting in extracting the actinides and lanthanides from a solution with a high content of aluminium nitrate and lithium nitrate, followed by selective re-extraction of the transplutonium elements with a lithium nitrate solution containing diethylenetriaminopenta acetic ions;
- Americium-curium separation by fixation on an anionic resin followed by elution with a nitric acid solution containing a complexing agent.

These treatments yielded 2.6 g of plutonium, 150 mg of americium, 15 mg of curium. The total yields of plutonium and transplutonium elements were 97% and 90%, respectively. The decontamination factors were higher than 10^5.

Resume

Quatre éléments contenant en tout 20,95 g de plutonium sous forme d'alliage plutonium-aluminium à 10 % de Pu ont été irradiés dans le réacteur EL3 jusqu'à un flux intégré de 5.10^{21} n/cm^2. Leur traitement a été effectué dans la cellule "Pétrus" de Fontenay-aux-Roses. L'originalité du procédé tient à l'utilisation du milieu nitrique pour toutes les opérations et à l'emploi de la trilaurylamine (TLA) pour la séparation du plutonium. Ce traitement comprend en effet:

- une dissolution sodique et/ou nitrique des "ronds de serviette",
- une séparation du plutonium par deux cycles d'extraction à la TLA (5 % en volume) en milieu nitrique suivis chacun d'une réextraction par une solution nitro-sulfurique.
- une séparation des éléments transplutoniens par deux cycles d'extraction au D_2EHPA (8 % en volume) consistant chacun à extraire les actinides et les lanthanides d'une solution chargée de nitrates d'aluminium et de lithium, puis à réextraire sélectivement les transplutoniens par une solution de nitrate de lithium contenant des ions diéthylène-triaminopenta-acétiques,
- une separation américium/curium par fixation sur une résine anionique suivie d'une élution par une solution nitrique contenant un agent complexant.

A l'issue de ces traitements on a obtenu 2,6 g de plutonium, 150 mg d'américium et 15 mg de curium. Le rendement global en plutonium et en transplutoniens a été respectivement de 97 % et de 90 %. Les facteurs de décontamination ont été supérieurs à 10^5.

I - INTRODUCTION

Depuis quelques années les besoins en isotopes d'éléments transuraniens vont en croissant grâce en particulier à leur utilisation dans les générateurs autonomes d'énergie à des fins médicales ou pour des missions spatiales.

Dès 1959 un programme d'irradiation de plutonium en vue de l'obtention de quantités pondérables d'américium et de curium a été lancé en France. Au fur et à mesure de l'extension de ce programme il s'est avéré souhaitable de mettre au point des méthodes d'extraction et de purification des éléments transplutoniens qui puissent être exploitées industriellement dans les appareillages utilisés couramment lors du traitement des combustibles irradiés. En particulier nous avons orienté nos recherches vers des procédés de séparation par extraction liquide-liquide s'effectuant en milieu nitrique pour leur plus grande partie. On peut ainsi espérer, par rapport aux techniques d'échange d'ions que nous avons préalablement utilisées [1], obtenir plus de souplesse dans les procédés et d'autre part un rendement de récupération important et des facteurs de décontamination élevés, tout en bénéficiant de conditions d'exploitation plus aisées.

Le traitement chimique décrit ici constitue donc un premier essai, sur cibles irradiées, d'un mode de purification du plutonium et des éléments transplutoniens dont la théorie a été faite par ailleurs [2].

L'aspect général de ce traitement chimique ayant donné lieu à une publication antérieure [3], nous discuterons ici principalement la partie récupération du plutonium.

II - TRAITEMENT CHIMIQUE

Les cibles soumises à l'irradiation étaient constituées d'alliage Pu-Al (plutonium 10 % en masse) gainé d'aluminium et mis sous forme de "ronds de serviette". Ceux-ci, introduits dans le réacteur EL3 en novembre 1960, contenaient au total 20,950 grammes de plutonium.

Le flux moyen dans le canal de la pile était de 0,82 x 10^{14} n.cm^{-2}.sec^{-1} et au bout de trois ans d'irradiation (29 novembre 1960 au 20 mai 1964) le flux intégré reçu était de 0,5 x 10^{22} n.cm^{-2}.

Les "ronds de serviette" ont été traités après démantèlement de l'assemblage d'irradiation suivi d'un temps de désactivation prolongé (29 mois). Le procédé utilisé comprenait trois étapes :

1 - dissolution

2 - séparation et purification du plutonium

3 - séparation et purification des éléments transplutoniens

Les opérations ont été réalisées dans la cellule "Pétrus" [4] qui fournissait une protection de 1,20 m de béton, et dans des boîtes à gants blindées (5 mm de plomb) pour le second cycle de purification du plutonium [5]. Les divers appareillages mis en oeuvre ont été décrits par ailleurs [6].

1 - Dissolution.

Deux types de mise en solution de la cible ont été essayés : une attaque sodique de la cible suivie de la dissolution acide du résidu et une attaque par l'acide nitrique aboutissant directement à une solution de nitrates propre à l'extraction.

Lors de la dissolution mixte le mélange NaOH = 4,6 M - $NaNO_3$ = 4,1 M a été utilisé à 80°C pour dissoudre la gaine d'aluminium et désagréger le noyau d'alliage. Après filtration et lavage à la soude 1 M, le résidu a été dissous complètement dans le mélange HNO_3 = 6 M - $Hg(NO_3)_2$ = 0,02 M - NaF = 0,01 M porté à l'ébullition.

La dissolution directe de la cible s'est effectuée dans le mélange HNO_3 = 7,4 M - $Hg(NO_3)_2$ = 0,02 M - HF = 0,02 M (conditions finales). La vitesse de dissolution a été contrôlée par adjonction soit d'acide, soit de catalyseur au cours de la réaction.

Dans le premier cas les ronds de serviette étaient introduits dans une solution bouillante de composition suivante HNO_3 = 0,1 M - $Hg(NO_3)_2$ = 0,052 M - HF = 0,052 M. On a ensuite introduit à débit constant (2 $ml.mn^{-1}$) de l'acide nitrique concentré jusqu'à l'obtention d'une concentration d'acide nitrique de 3,7 M. La vitesse de réaction devint extrêmement lente lorsque tout l'aluminium du gainage fut dissous. L'alliage non attaqué fut ensuite mis en solution en amenant l'acidité à la valeur de 7,4 M et en continuant l'ébullition.

Dans le second cas la dissolution fut entreprise avec le mélange HNO_3 7,7 M - HF = 0,021 M à l'ébullition. On ajouta en continu une solution de nitrate mercurique jusqu'à l'obtention d'une concentration en Hg^{++} de $4,6 \times 10^{-5}$ M. Après dissolution de la gaine on a dû porter la concentration en ions Hg^{++} à $2,2 \times 10^{-2}$ M pour achever la dissolution de l'alliage. On a pu estimer la vitesse de dissolution de l'alliage Pu-Al à 20 $mg.cm^{-2}.h^{-1}$.

Afin d'éliminer la silice de la solution nitrique on a effectué un traitement à la gélatine suivi d'une filtration (40 mg de gélatine par gramme de plutonium).

2 - Séparation et purification du plutonium

Plusieurs solvants sont utilisables pour réaliser la séparation du plutonium et sa purification. Notre longue expérience des amines tertiaires [7] nous a tout naturellement conduits à utiliser le nitrate de trilaurylammonium en mélange avec le dodécane et l'octanol-2 [8].

Les solutions issues de l'attaque chimique de la cible ont été ajustées aux conditions suivantes :

HNO_3 = 1 M $Al(NO_3)_3$ = 1,5 M.

La concentration du plutonium variait entre 0,2 et 0,7 $g.l^{-1}$.

Le schéma du cycle de séparation du plutonium est indiqué sur la figure 1.

Après réextraction du plutonium en solution sulfo-nitrique celle-ci est ajustée par addition d'acide nitrique et de nitrate de lithium aux valeurs suivantes :

HNO_3 = 2 M
H_2SO_4 = 0,0125 M
$LiNO_3$ = 1 M

Le second cycle de purification met en jeu un solvant de composition identique à celui du premier cycle. Le plutonium est finalement obtenu en solution sulfo-nitrique (0,25 M H_2SO_4, 0,05 M HNO_3) à une concentration de 30 g/l.

3 - Séparation et purification des éléments transplutoniens.

Les phases aqueuses résiduelles de l'extraction du plutonium contiennent les éléments transplutoniens et les produits de fission ainsi que des teneurs élevées en ions Al^{+++}. La séparation des éléments transplutoniens a été effectuée par extraction liquide-liquide, le solvant choisi étant l'acide di-2-éthyl-hexyl-phosphorique. En plus d'une bonne stabilité chimique, ce produit commercial, comparé à la TLA, permet d'obtenir dans les séparations actinides-lanthanides (par exemple Am-Eu) des facteurs de séparation plus élevés. Cette séparation de groupes est effectuée en utilisant l'action complexante de l'acide éthylène-triamino-pentacétique (D.T.P.A.). Le schéma général de la séparation du couple Am-Cm des produits de fission-terres rares est représenté sur la figure 2.

Le mélange américium-curium, après le 2ème cycle de purification, a été ajusté en milieu hydro-alcoolique (80 % en volume d'éthanol) aux conditions suivantes :

HN_4NO_3 = 1,33 M HNO_3 = 0,05 - 0,1 N

Cette solution hydro-alcoolique a été passée sur une colonne de résine Dowex 1 X 8. Après lavage de la colonne avec la solution à 80 % d'éthanol : NH_4NO_3 = 1,33 M - HNO_3 = 0,085 M, l'élution du curium a été effectuée par la même solution hydro-alcoolique contenant en plus 0,025 M de DTPA. Après élution du curium, l'américium fut ensuite élué par HNO_3 1 N.

III - RESULTATS ET DISCUSSION

1. - Dissolutions

Des deux procédés de mise en solution de la cible, l'attaque sodique fournit un premier effluent qui contient certains produits de fission solubles en milieu alcalin (Cs). La dissolution des oxydes résiduels aboutit à une solution contenant les éléments transuraniens à une concentration élevée. Dans le cas de la dissolution nitrique directe cette concentration est limitée par la présence de l'aluminium qui se trouve intégralement en solution (voir tableai I). Aucun résidu radioactif insoluble n'a été noté dans l'un ou l'autre cas.

Tableau I

COMPOSITION DES SOLUTIONS NITRIQUES APRES DISSOLUTION

Espèce	Unité	DISSOLUTION mixte	DISSOLUTION acide
HNO_3	M	3,6	2,0
Al^{3+}	M	-	1,2
Pu	$g.l^{-1}$	1,1	0,2
activité α	$Ci.l^{-1}$	2,0	0,23

La dissolution mixte présente le désavantage d'imposer la filtration d'une solution visqueuse, le résidu insoluble représentant les matières à récupérer. Pour une application industrielle, la dissolution acide serait donc préférable.

La vitesse de dissolution de la gaine a été d'environ 300 $mg.cm^{-2}.h^{-1}$ dans chaque cas. Par contre les vitesses de dissolution du résidu ont été très différentes puisque dans un cas il s'agissait surtout d'oxydes et dans l'autre d'alliage PuAl. On a obtenu les valeurs approximatives suivantes :

Procédé mixte	:	600 $mg.cm^{-2}.h^{-1}$
Procédé acide	:	20 " " " (1)

Les gaz formés durant cette opération ont été piégés, après dessication, sur charbon actif. La spectrographie gamma a révélé la présence de ^{85}Kr.

2 - Extraction du plutonium par le nitrate de trilaurylammonium

Les résultats obtenus lors de la séparation et de la purification du plutonium sont résumés dans le tableau II.

Tableau II

SEPARATION DU PLUTONIUM
FACTEURS DE DECONTAMINATION

Facteurs de décontamination	1er Cycle		2e Cycle	Global
	a	b		
β globaux	5.200	950	70	3,2 x 10^5
γ "	9.000	700	100	7,8 x 10^5
Ru	1.700	370	160	2,5 x 10^5
Am, Cm, Ce, Eu	10^5	10^5	10^5	10^{10}

(a) Solution provenant de la dissolution mixte
(b) Solution provenant de la dissolution acide

L'activité spécifique de la solution (a) était plus forte que celle de la solution (b).

---

(1) Que l'attaque soit contrôlée par l'acidité ou par la concentration en catalyseur, on n'a pas observé de différence importante : la dissolution complète a duré 8 h dans le premier cas et 9 h15 dans le second.

Des écarts assez considérables sont à noter pour les deux solutions en ce qui concerne les facteurs de décontamination relatifs aux β, γ globaux et au Ru lors du premier cycle. En fait les valeurs élevées ont été obtenues dans des conditions anormales de saturation du solvant, la présence d'une 3ème phase ayant été notée. Par contre les valeurs les plus faibles correspondent à la solution la moins riche en plutonium et en émetteurs β γ. Cette solution ayant été traitée dans le même appareillage d'extracteurs une contamination est probable.

En ce qui concerne le comportement hydraulique des solutions dans les extracteurs on doit signaler l'absence complète de tout précipité d'interphase.

Les produits des premiers cycles des solutions (a) et (b) ont été réunis pour alimenter le second cycle de purification. Celui-ci fournit des facteurs de décontamination plus faibles mais qui permettent d'atteindre une décontamination globale acceptable. Le taux de récupération du plutonium a été supérieur à 99,9 %.

Cette première expérience d'utilisation de nitrate de trilaurylammonium en tête de procédé doit être renouvelée, en particulier dans le cas où le temps de désactivation est plus court. Une amélioration du facteur de décontamination du plutonium en ruthénium doit être recherchée. Le facteur saturation du solvant semble à cet égard jouer un rôle important.

IV - BIBLIOGRAPHIE

/1/ A. CHESNE - R. BERGER
Separation of transuranium elements from irradiated plutonium
NSA 21 : 36085 (1967)

/2/ G. KOEHLY
Note CEA N 816 (Sept. 67) p. 381-396

/3/ R. BERGER - G. KOEHLY - C. MUSIKAS - R. POTTIER - R. SONTAG
"Processing of highly irradiated Al-Pu alloy"
Conférence présentée à San Francisco - Avril 1968
155 th National A.C.S. Meeting

[4] R. SONTAG - R. BERGER
"Cellule blindée Pétrus pour la production et l'étude du Californium 252"
Rapport CEA R n° 3232

[5] Ph. GUILLOT et al.
Note CEA N 616 (déc. 66) - p. 354-358

[6] R. SONTAG
Note CEA N 816 (Sept. 67) p. 397-405

G. KOEHLY
Note CEA N 816 (Sept. 67) p. 406-409

[7] M. de TRENTINIAN - A. CHESNÉ
"Extraction et purification du plutonium par une amine tertiaire"
Rapport CEA R 1426 (1960)

A. CHESNÉ - A. BATHELLIER - G. KOEHLY
Nuclear Science and Engineering 17.557.565 (1963)

A. BATHELLIER - G. KOEHLY - J.J. PEREZ - A. CHESNÉ
"Utilisation de la trilaurylamine au retraitement des combustibles irradiés"
Rapport CEA R 2594

[8] G. KOEHLY
Note CEA N 816 (Sept. 67) p. 377-380

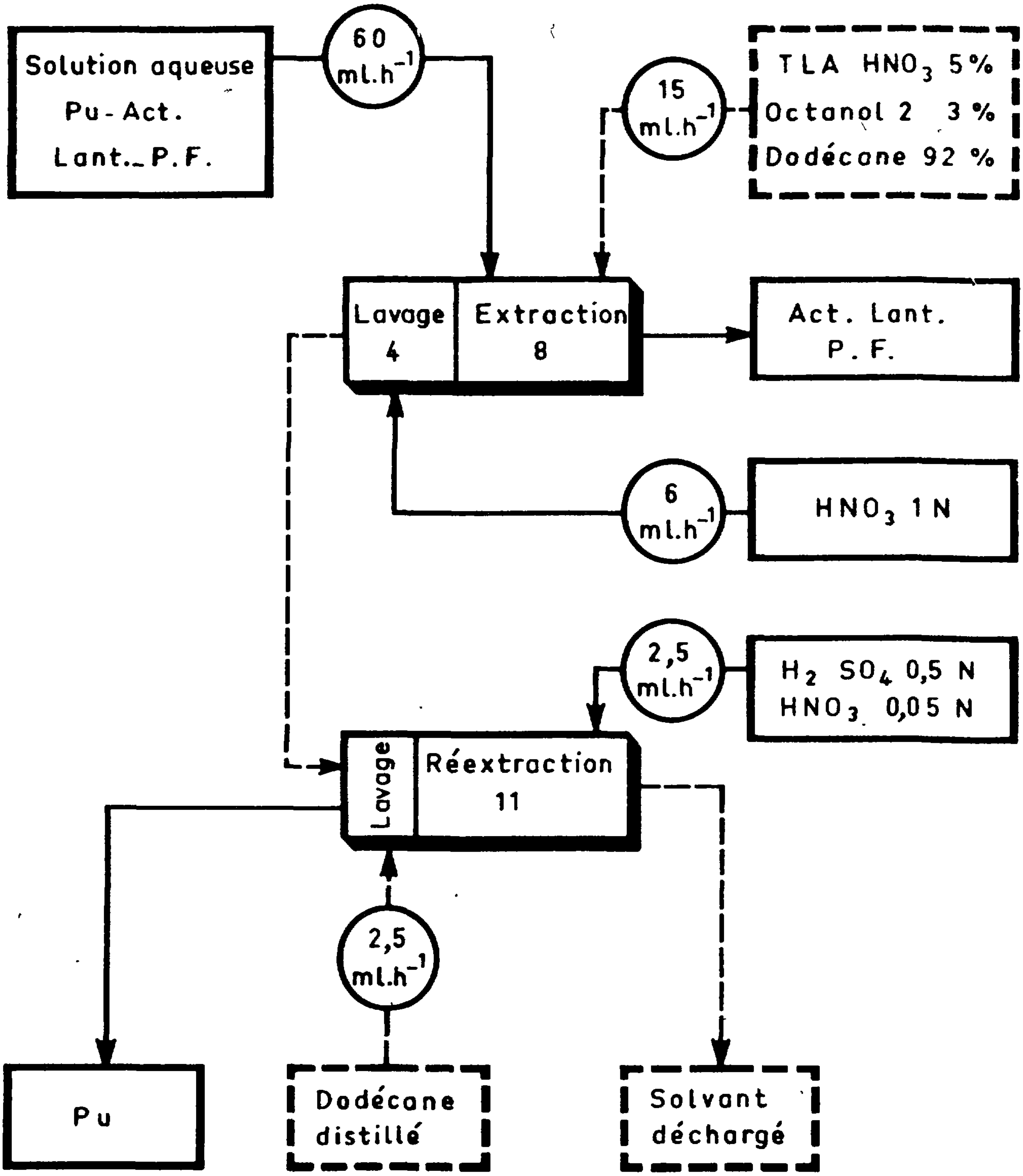

Fig.1._ Cycle de séparation du Plutonium .-
Schéma d'alimentation des batteries.

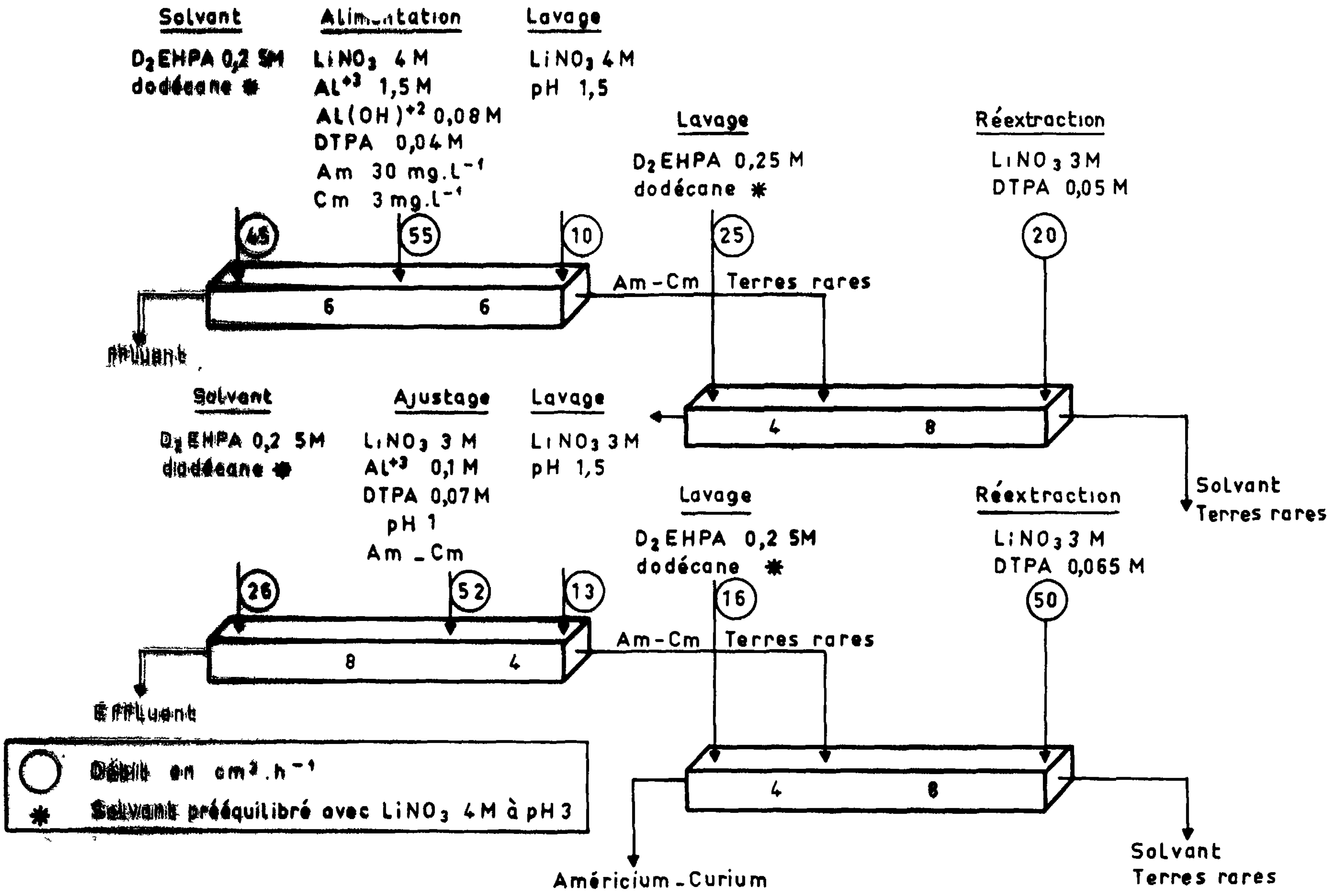

Fig. 2. – Purification de l'Américium et du Curium par extraction par l'acide Di 2 - Éthylhexyl phosphorique.

TRAITEMENT DES OXYDES D'URANIUM LEGEREMENT ENRICHI

CONTRIBUTION FRANÇAISE AU PROJET D'USINE JAPONAISE

Guy LEFORT
et
Michel de RUBERCY (Saint–Gobain Techniques Nouvelles)

COMMISSARIAT A L'ENERGIE ATOMIQUE
Direction des Matériaux et Combustibles Nucléaires
Département de Chimie
Services de Chimie des Combustibles Irradiés
Service de Génie Chimique Radioactif

ABSTRACT

In entrusting Saint-Gobain Techniques Nouvelles with the study of a multi-purpose retreatment plant for treating, in particular, the oxides of enriched uranium, the Atomic Fuel Corporation asked that active tests be performed to verify the performance of the method adopted.

The scheme proposed by Saint-Gobain was tested in the laboratories of the Commissariat à l'Energie Atomique with fuel elements, some of which were strongly irradiated (about 20 000 MWd/t). These experiments enabled us to determine the expected decontamination factors for an industrial plant, and yielded very encouraging data on the purity of the finished products, fissile material yield and the safety margins of the method. We could determine also the role of certain elements, particularly zirconium, which accelerates the decay of tributylphosphate. By using a zirconium complexing-agent (hydrofluoric ion in weak concentration) in the extraction process, it is possible to obtain appreciably improved industrial results without any far-reaching modification of the plants.

RESUME

En confiant à Saint-Gobain Techniques Nouvelles l'étude d'une usine de retraitement polyvalente, capable en particulier de traiter des oxydes d'uranium enrichi, l'Atomic Fuel Corporation a demandé que soient effectués des essais actifs afin de vérifier les performances du procédé retenu.

L'étude du schéma proposé par Saint-Gobain a donc fait l'objet d'essais dans les laboratoires du Commissariat à l'Energie Atomique, avec des éléments combustibles dont certains étaient très irradiés ($\sim$ 20.000 MWj/t). Ces expériences ont permis de déterminer les facteurs de décontamination que l'on pouvait espérer obtenir dans une installation industrielle et de donner des indications très encourageantes sur la pureté des produits finis, le rendement en matière fissile et les marges de sécurité du procédé. Elles ont permis aussi de préciser le rôle de certains éléments, en particulier le zirconium qui accélère la dégradation du tributylphosphate. L'utilisation d'un complexant du zirconium : l'ion fluorhydrique en faible concentration à l'extraction, permet d'améliorer très sensiblement les résultats d'exploitation en usine sans amener de modification profonde dans les installations.

I - INTRODUCTION

En même temps qu'elle confiait à Saint-Gobain Techniques Nouvelles les études d'une usine polyvalente capable de traiter de l'uranium naturel et des oxydes d'uranium hautement enrichi [1][2], l'Atomic Fuel Corporation demandait que soient effectués parallèlement des essais pour vérifier les performances du procédé retenu. Dans le cadre d'accords internationaux entre la France et le Japon, le Commissariat à l'Energie Atomique a collaboré avec Saint-Gobain Techniques Nouvelles pour l'élaboration du schéma de procédé et pour la partie expérimentale.

Après une étude théorique approfondie des différents cycles d'extraction nécessaires pour obtenir des facteurs de décontamination suffisants, on a commencé l'expérimentation avec des matériaux non irradiés. Ces expériences "α" ont servi à ajuster les schémas proposés pour limiter au maximum les pertes de produits fissiles et assurer la sécurité du procédé. Les résultats obtenus ont été ensuite confirmés et complétés avec des combustibles fortement irradiés ("essais α, γ").

II - CONDUITE DES ETUDES

1 - Objectifs

On vise des performances élevées avec des pertes de l'ordre de 0,20 % pour l'uranium et 0,25 % pour le plutonium, pour l'ensemble des extractions. Les spécifications retenues pour les produits finis sont celles que préconise l'U.S.A.E.C. [3] :

Uranium : Pu < 10 ppb
Activité $\gamma < 200$ % de l'activité de U en équilibre séculaire

Plutonium : Impuretés métalliques < 5000 ppm
Activité $\beta + \gamma < 50.10^{-6}$ Ci.g^{-1}

2 - Etude théorique

Le calcul peut déterminer a priori la répartition de l'acide nitrique et des matières fissiles entre les deux phases, ainsi que les conditions opératoires requises pour atteindre les spécifications souhaitées. Les répartitions de l'uranium et de l'acide nitrique ont été déterminées par la méthode graphique décrite par J.T. WOOD et J.A. WILLIAMS [4] en utilisant les courbes de distribution de CODDING [5] et du C.E.A. [6]. Ensuite, les concentrations du plutonium ont été calculées étage par étage à l'aide de coefficients de partage choisis dans la littérature [7][8] en fonction de l'acidité et de la concentration uranium de chaque étage. La séparation uranium-plutonium se fait par réduction sélective du plutonium au moyen du nitrate uraneux [9].

Le calcul a été repris ultérieurement pour faire intervenir le plutonium VI dont la présence a été mise en évidence au cours des essais.

3 - Etude pratique

Les différentes campagnes d'essais en α et α γ ont eu pour but de vérifier que :

- le schéma proposé était correct et les pertes admissibles,
- la séparation uranium-plutonium était suffisamment efficace,
- les facteurs de décontamination permettaient d'une part d'obtenir des produits finis conformes aux spécifications imposées et confirmaient d'autre part les hypothèses prises par S.G.N. pour calculer les protections biologiques,
- les concentrations maximales de plutonium atteintes en cas de dérèglement ou d'erreurs opératoires étaient admissibles pour la sécurité du procédé.

On a abouti ainsi au schéma représenté par les figures 1, 2 et 3, qui devrait pouvoir être directement appliqué à l'échelle industrielle.

De plus, on a cherché à déterminer les effets de la dégradation du solvant par les produits très radioactifs, en recyclant le solvant après traitement. C'est au cours de ces expériences que l'on a mis en évidence les réactions parasites qui se manifestent par l'abaissement des facteurs et décontamination et par l'apparition de précipitations abondantes aux interphases de l'extraction, quelle que soit l'origine du solvant.

III - DESCRIPTION DES ESSAIS

Toutes les études théoriques ont été menées par l'équipe de Saint-Gobain mais les essais ont tous été réalisés dans le bâtiment de Radiochimie du Centre de Fontenay-aux-Roses, avec la collaboration du Département de Chimie du C.E.A.

1 - Installations

Les mises aux points α ont été menées en boîtes à gants, tandis que les essais α γ (mille curies β γ pour la dissolution) ont été réalisés dans la cellule "Cyrano", chaîne α γ de 25 cm de plomb comportant une enceinte totalement étanche en acier inoxydable [10].

Les analyses ont été réalisées dans un laboratoire adjacent comportant des boîtes à gants et la chaîne α γ "Carmen".

Les essais du 3ème cycle (quelques curies β γ) ont été faits dans la cellule "Bergerac" étanche α et protégée par 5 cm de plomb.

2 - Appareillage et réactifs

Les extractions sont réalisées dans de petites batteries de mélangeurs-décanteurs comportant 16 à 21 étages (capacité : 25 ml par étage environ).

Tous les réactifs utilisés sont identiques à ceux qui sont en usage dans les installations de retraitement. Pour les essais α γ

on part d'une dissolution nitrique d'éléments "cristal de neige" (pastilles d'UO_2 enrichi à 4 %) gainés en aluminium, irradiés dans le réacteur EL3 jusqu'à environ 20.000 MWj/t^{-1} et refroidis pendant 275 jours en moyenne. On fait l'ajustage pour obtenir une activité de l'ordre de 250 $ci.l^{-1}$ β γ tout en enrichissant en plutonium pour être proche du type de combustible prévu (1 g de plutonium pour 90 g d'uranium).

Pour opérer dans les conditions les plus défavorables, les essais ont été effectués avec un solvant usagé provenant de Marcoule et comportant une activité résiduelle de 300 $\mu Ci.l^{-1}$ (Zr + Ru).

3 - Contrôle

Tous les débits et toutes les solutions de sortie sont contrôlés chaque heure. En fin d'essai, on échantillonne les deux phases en équilibre dans tous les étages.

Les problèmes analytiques se trouvent compliqués par le taux de combustion très élevé des combustibles traités. En effet, la présence de quantités très importantes de produits de fission dans la charge (plusieurs grammes par litre) nous a imposé de modifier certaines méthodes d'analyse en usage dans les usines d'exploitation. Par ailleurs, la très forte radioactivité de certains échantillons (plusieurs curies β γ par ml à la dissolution) rend difficile l'application des méthodes utilisant les résines échangeuses d'ions ou d'autres matières organiques sensibles aux rayonnements.

Les analyses chimiques les plus fréquentes concernent l'acidité, l'uranium, le plutonium et le rapport TBP/dodécane. Les facteurs de décontamination et l'activité γ pour chacune des étapes du traitement sont mesurés avec une chaîne de spectrométrie comportant un analyseur 400 canaux. La bande d'énergie explorée s'étend de 0 à 1,7 MeV environ, ce qui est suffisant pour caractériser et analyser les émetteurs γ rencontrés (^{95}Zr + ^{95}Nb, ^{103}Ru, ^{106}Ru + ^{106}Rh, ^{137}Cs, ^{141}Ce, ^{144}Ce, ^{144}Pr). L'ensemble hautement stabilisé permet, en passant par un ordinateur IBM 360-50, de réaliser un grand nomnre d'analyses par comparaison avec des étalons.

Au total, les essais ont demandé plus de 20.000 dosages et mesures, 3 à 6.000 vérifications de débit de pompe, 2.000 relevés de température, etc.

4 - Durée des essais

La durée d'un essai est fixée par le temps nécessaire pour atteindre l'équilibre dynamique du processus d'extraction, ce qui, pour les deux premiers cycles essayés en série, impose plus de 60 heures. La remise en état et la collection des résultats d'analyses demandent environ 15 jours pour les essais α et plus d'un mois pour les essais α γ.

Après la mise au point théorique du schéma, les travaux qui ont comporté 22 essais - dont 5 α β γ - se sont étendus sur une période de 14 mois, avec une équipe qui a été, en moyenne, de 18 personnes (ingénieurs et techniciens).

IV - ETUDE DES EXTRACTIONS

Le schéma global du traitement est représenté sur les figures 1, 2 et 3. On s'y reportera pour connaître les caractéristiques chiffrées des diverses extractions examinées.

1 - Premier cycle

Son but est de séparer l'uranium et le plutonium des produits de fission : il comporte une extraction suivie d'un lavage (I) et une réextraction simultanée de U et Pu (II).

1.1. Extraction I.

Les conditions choisies doivent être théoriquement suffisantes pour assurer l'extraction de l'uranium et du plutonium avec un rendement de 99,98 %, même si celui-ci se trouve en partie (15 %) sous une forme moins extractible (PuO_2^{++}). L'élévation de la température favorise l'extraction du plutonium et augmente l'insolubilité du TBP en phase aqueuse, mais elle agit en sens contraire sur le partage de l'uranium. (L'expérience montre qu'il ne faut pas dépasser 35°C). Le débit de lavage (0,2 fois celui du solvant) a été choisi pour obtenir une bonne décontamination sans trop diminuer les facteurs d'extraction pour U et Pu.

1.2. Extraction II.

Son but est de réextraire en phase aqueuse le plutonium et l'uranium en réduisant au maximum le facteur de dilution. Il s'agit en effet de jouer sur tous les paramètres pour éviter la concentration intercycle. On élimine les risques de polymérisation et d'hydrolyse du plutonium grâce à une injection d'acide concentré dans la partie centrale de la batterie.

1.3. Résultats.

Au cours des diverses expériences α γ, nous avons constaté la formation de précipités abondants au niveau des interphases de l'extraction I. Pour remédier à ce phénomène, nous avons utilisé deux méthodes : l'une, extrapolation des méthodes industrielles, consiste à chasser périodiquement le précipité par vidange brusque du pot encrassé; l'autre fait intervenir l'acide fluorhydrique, en petite quantité, pour complexer le zirconium in situ au cours de l'extraction. (voir chapitre V).

Le tableau I indique les principales modifications apportées et les résultats obtenus.

Les figures 4 et 5 montrent la répartition des principaux émetteurs γ lorsqu'on élimine mécaniquement les précipités. On remarque que la décontamination est essentiellement limitée par les éléments zirconium-niobium.

Les diagrammes de la figure 6 mettent en évidence l'évolution des concentrations des éléments U et Pu et de NHO_3 libre, en fonction du numéro des étages d'extraction. Pour le premier cycle, on note une concordance des profils théoriques et pratiques. La différence des pentes pour les concentrations du plutonium dans la section Extraction provient d'un changement de rapport de débit. L'infléchissement de la courbe aux étages 1 à 5 est dû à une mauvaise efficacité des micro-extracteurs dans les milieux dilués.

Des essais et des mesures similaires ont été réalisés sur les autres cycles; les conclusions sont résumées dans les tableaux II et III.

Il faut signaler que les fuites de plutonium en PC 2, dues peut-être à la présence de PuO_2^{++} peu extractible, devraient disparaître au stade industriel avec des appareils ayant un meilleur rendement. De même, il ne faut pas attacher trop d'importance à la présence excessive de plutonium dans l'uranium à la fin du 2ème cycle car l'injection de nitrate uraneux peut être réalisée d'une manière plus rationnelle en usine.

Enfin, le solvant utilisé dans le premier cycle a été traité et recyclé en continu une dizaine de fois par essai; son activité était réduite d'un facteur variant de 30 à 100 à chaque traitement.

V - RESULTATS D'ENSEMBLE

1 - Facteurs de décontamination

Les spécifications imposées aux produits finis correspondent à des facteurs de décontamination de 5.10^6 pour U et 10^7 pour Pu. Ces chiffres, répartis entre les divers cycles par analogie avec les résultats obtenus dans les usines françaises, figurent dans le Tableau IV sous la rubrique "Résultats prévus". Les chiffres expérimentaux sont assez différents mais la moyenne des résultats montre que la décontamination est suffisante. Le tableau V donne les niveaux d'activité pour chaque étape du processus d'extraction.

2 - Rendement des extractions

Les résultats obtenus (Tableau VI) comparés aux chiffres prévus montrent que le traitement est satisfaisant sur le plan des rendements d'extraction, excepté pour le plutonium à l'extraction III. Les performances de cette extraction devraient être meilleures avec des appareils de type industriel.

3 - Rendement des séparations U/Pu

La solution de plutonium issue de l'extraction IX titre 1 $mg.l^{-1}$ d'U, ce qui est nettement inférieur à la spécification exigée. Par contre, les valeurs trouvées pour les fuites en plutonium dans l'uranium sont excessives. Cependant, il y a quelques doutes sur ce chiffre expérimental, car il est difficile d'assurer l'absence totale de contamination sur les échantillons prélevés dans les cellules actives. De toute façon, on aura la possibilité de parfaire la décontamination en plutonium dans le troisième cycle U.

4 - Sécurité du procédé

Afin d'apprécier les marges de sécurité du procédé pour les pertes en matière fissile et pour les accumulations éventuelles de plutonium (risques de criticité), on a effectué des essais complémentaires de perturbations volontaires de plusieurs paramètres (variations d'acidité, variations de débits, présence de Pu VI, etc... Ces essais ont montré que le procédé retenu présente de larges garanties de fonctionnement qui pourront d'ailleurs être encore accrues par un appareillage approprié (doubles mesures de débits des réactifs importants, compteurs α γ et à neutrons, etc...)

VI - LES PRECIPITES D'INTERPHASES

1 - Etude et observation des précipités

Lors des essais décrits ci-dessus, on a observé l'apparition d'agglomérats d'interphases de couleur brune ou grisâtre, selon que l'on injecte des charges brutes ou filtrées. Ils s'amoncellent d'une façon progressive dans les étages d'extraction et plus particulièrement dans le pot qui reçoit la charge. Après 50 à 60 renouvellements des réactifs dans l'extracteur, les suspensions de plus en plus abondantes gagnent tous les étages d'extraction, sont entraînées par le solvant dans la section de lavage et finissent par obstruer les canalisations et perturber le fonctionnement de l'extraction.

Les analyses font ressortir des accumulations importantes de produits de fission (Zr, Nb, Ru) dans les pots encrassés. Mais les bilans effectués sur les solutions entrantes et sortantes montrent que seul le Zr est retenu notablement dans l'extracteur et semble faire partie intégrante des précipités. (Tableau VII).

L'analyse complète de ces dépôts n'est pas encore achevée mais on peut affirmer qu'ils sont essentiellement dûs aux impuretés du combustible (carbone, silice, oxydes insolubles ...) et surtout à l'interaction des produits de dégradation du TBP avec le Zr (l'insolubilité des sels formés croissant dans le sens DBP-MBP-PO_4H_3). L'importance de ces réactions augmente avec les dommages subis par le solvant et la concentration du zirconium. L'un et l'autre étant eux-mêmes fonctions de l'activité spécifique du combustible et de la quantité de précipités déjà accumulés aux interphases, le phénomène est en quelque sorte autocatalytique.

2 - Recherche d'une méthode pour éviter les précipités.

Le procédé qui consiste à chasser périodiquement le précipité permet d'assurer le fonctionnement normal de l'extracteur et une décontamination suffisante, mais l'opération doit être réalisée fréquemment et il est à craindre qu'elle s'avère fastidieuse et difficilement exploitable en usine pour des combustibles très irradiés.

Le but de ce travail étant de définir un schéma d'extraction présentant la sécurité de marche maximale, après avoir rempli nos engagements vis-à-vis de SGN pour son contrat avec l'AFC, nous avons poursuivi nos travaux en recherchant d'autres méthodes capables de ralentir la formation des précipités, voire celle des butylphosphates de zirconium.

Deux sortes de moyens pouvaient être envisagées:

- mise en oeuvre d'appareils assurant un entraînement continu des précipités (agitation lente dans les décanteurs, extracteurs centrifuges, colonnes pulsées ...)

- utilisation de réactifs spécifiques (gel de silice, acide mandélique ...) permettant une précipitation du zirconium avant extraction [11][12][13].

Toutes ces méthodes impliquant des modifications importantes de l'appareillage prévu ou imposant des études de mise au point longues et délicates, nous avons cherché un antidote approprié pour annihiler les effets du zirconium, "in situ" dans l'extraction. L'acide fluorhydrique nous a paru répondre à cette condition, sans exiger de changement fondamental dans l'appareillage ni dans la chimie du procédé, malgré les difficultés inhérentes à son emploi et les raisons qui l'avaient fait exclure jusqu'ici des installations de retraitement.

3 - Utilisation de l'acide fluorhydrique

3.1. Avantages.

On ne donnera pas ici les différents éléments théoriques qui nous permettent de prévoir les meilleures conditions d'emploi; ils ont été développés par ailleurs [14][15][16][17]. Retenons seulement que l'ion fluorure forme des complexes avec à peu près tous les cations contenus dans les solutions nitriques constituant la charge, mais que la force de ces complexes est très différente suivant le corps et l'acidité. Pratiquement, les fonctions de formation de tous ces complexes ($\bar{X}$M) sont indépendantes de la concentration de ces différents corps; mais elles sont reliées entre elles et à la concentration totale du fluor en phase aqueuse (fig. 7).

Ces graphiques montrent que la force des complexes va en décroissant dans le sens Zr, Pu, Al, U, avec une nette supériorité pour le zirconium, ce qui justifie les additions fluorhydriques.

L'expérience prouve que, pour une valeur de $\bar{X}$ Zr comprise entre 1,5 et 2 dans le pot d'introduction, les précipités d'interphases n'apparaissent pratiquement pas. Corrélativement les facteurs de décontamination (surtout celui de Zr) s'améliorent nettement.
Si on se fixe une valeur pour cet étage en se servant du graphique (fig. 7) on déduit les coefficients des autres corps.

Ainsi $\bar{X}$ Zr = 2 impose $\bar{X}$ Pu = 0,4 $\bar{X}$ U = 0,04 $\bar{X}$ Al = 0,15

mais $\bar{X}$ Zr = 1,5 impose $\bar{X}$ Pu = 0,2 $\bar{X}$ U = 0,02 $\bar{X}$ Al = 0,07

Comme on connaît la concentration des principaux cations de la phase aqueuse on peut calculer la quantité totale de fluor nécessaire.

3.2. Inconvénients.

a) Corrosion - Les études menées par le service spécialisé du C.E.A. montrent que l'attaque des aciers inoxydables est pratiquement nulle à 50° si la concentration en acide fluorhydrique n'excède pas 10^{-2} M; on peut, d'ailleurs, limiter encore plus l'action corrosive de cet acide par des additions appropriées d'aluminium. Ce corps intervient assez peu dans les calculs de quantité de fluor nécessaire, quand il est en compétition avec le zirconium.

b) Fuites de plutonium - Le fluor forme un complexe assez fort avec le plutonium (fig. 7) et il risque de provoquer des fuites prohibitives de matières fissiles. Théoriquement l'aluminium ajouté avec les réactifs ou dans les étages dilués d'extraction devrait permettre de neutraliser l'excès de fluor libéré par le départ des matières fissiles dans le solvant. Toutefois l'aluminium précipitant en milieu butylphosphorique, il faut éviter d'en ajouter un excès.

c) Extraction de l'acide fluorhydrique dans le solvant - L'acide fluorhydrique a un coefficient de partage de l'ordre de 0,03 pour des solutions contenant 50 $g.l^{-1}$ d'U. Si on l'injecte avec la solution de lavage, une proportion qui peut ne pas être négligeable passe donc dans le solvant de réextraction. Ce phénomène peut n'avoir aucune répercussion si l'installation a été prévue en conséquence mais ce n'est pas le cas dans ce schéma. De toute façon sa présence dans les pieds de colonne du premier cycle impose d'étudier à nouveau le poste de concentration de ces solutions. Des travaux importants restent encore à faire pour finir de maitriser tous ces problèmes.

3.3. Essais complémentaires sur la complexation du zirconium

a) Essais α

Nous avons reproduit les précipités d'interphase en l'absence d'activité β γ en ajoutant des acides mono et dibutylphosphoriques dans le solvant et du zirconium dans la charge; de tous les corps ajoutés pour simuler les impuretés des combustibles irradiés (Si, Mo, Ru, Cs, Al, Zr) seul le zirconium entraîne une précipitation abondante, ce qui corrobore les observations précédentes.

L'expérience montre qu'il faut ajouter une quantité de fluor telle que la fonction de formation du complexe $\bar{X}$ Zr soit supérieure à 1,5 pour limiter convenablement la précipitation des butylphosphates de zirconium. Pour des valeurs de $\bar{X}$ Zr qui dépassent 2 on obtient une efficacité accrue, mais le milieu devient trop complexant et on observe une baisse du rendement en matières fissiles (fuite importante de plutonium dans les raffinats). Pour neutraliser l'excès de fluor libre dans les parties diluées on peut ajouter de l'aluminium qui, par son effet de masse, joue le rôle d'un tampon sur le degré de complexation.

b) Essai α γ

Nous n'avons fait qu'un seul essai α γ complémentaire (1000 $Ci.l^{-1}$ β γ). Il nous a permis d'apprécier le rôle particulièrement spectaculaire du fluor contre les précipités d'interphase ainsi que la disparition presque complète du zirconium des impuretés restant dans les matières fissiles à la sortie de l'extraction I (fig. 8 et 9). Les résultats chiffrés ont été reportés dans les tableaux I et VII.

VII - CONCLUSION

Ces essais nous ont amenés à confronter des études théoriques de schémas d'extractions aux résultats expérimentaux. Ils nous ont permis de définir une installation avec le maximum de sécurité, aussi bien pour sa mise en service que pour son exploitation normale.

Par ailleurs, nous avons pu observer et réduire les effets de la dégradation accélérée du solvant aux très fortes activités. Les résultats favorables déjà obtenus laissent espérer que nous aboutirons prochainement à des solutions qui apporteront une amélioration notable aux installations déjà en service tout en présentant un grand intérêt pour les futures usines qui traiteront des combustibles fortement irradiés.

Les programmes de recherche et de développement restent encore chargés - par exemple, apparition de plutonium VI ou régénération du solvant - mais déjà on peut affirmer que l'extrapolation du procédé Purex aux combustibles très irradiés est tout à fait possible, avec des pertes en matières fissiles et des facteurs de décontamination compatibles avec une exploitation économique des usines.

REFERENCES BIBLIOGRAPHIQUES

[1] CURILLON R., VIENNOT J.
L'ensemble industriel de traitement des combustibles irradiés au Japon.
Energie Nucléaire, 1968, 10.3

[2] LEFORT G., MIQUEL P., de RUBERCY M.
Etude et expérimentation des schémas des extractions de l'usine japonaise.
Energie Nucléaire, 1968, 10.3

[3] Federal Register - United States - Atomic Energy Commission
Rules and Regulation, titre 10, Atomic Energy

[4] WOOD J.T., WILLIAMS J.A.
Computations of the performance of a miltucomponent solvent extraction system. The separation of uranium and plutonium from fission products by tributylphosphate.
Trans. Ind. Chem. Engrs, 1958, 36, pp. 382-393

[5] KAPL 602 - Cooding Haas Heumann

[6] Génie Chimique - août 1961, vol. 86, n° 2, pp. 29-38

[7] Chemical processing of reactor fuels 1961. Nuclear science and Technology A.
Edited by John F. Flagg Academic Press Inc. (London)

[8] VERGNAUD C.
Etude de la solubilité du nitrate de plutonyle en vue de son extraction par solvant.
Rapport CEA R.2496 (1966)

[9] TALMONT X.
Utilization of U IV in a second cycle of purification of plutonium by TBP - Solvent extraction Chemistry of Metals. Proceeding of the international conference sponsored by the United Kingdom Atomic Energy Authority, 27-30 Sept. 1965. Harwell Berks edited by Mc Kay ed in chief London, Melbourne, Toronto, 1965, pp. 103-115

[10] LEFORT G., PAQUIS R.
A new type of chemistry cell for high specific activity at Fontenay-aux-Roses. Proceedings of the 12th conference on remote systems technology.
A.N.S. nov. 1964, pp. 15-24

[11] RODRIGUEZ PARRA, URIARTE HUEDA et LOPEZ PEREZ
23 Déc. 1965, Annales de la Société Espagnole du Real en physique et chimie, série B, chimie, tome LXII, p.1275

[12] SALOMON et LOPEZ-MENCHERO
E T R 203 et 213 (Avril et Juin 1967)

[13] JOON et DEURLOO
Décontamination of U by complexation of fission Zr Nb and Ru. K R 115, Déc. 1966

[14] SCHLEA et LOWE - D P 842

[15] LEFORT G. et MIQUEL P.
Le traitement des combustibles à base d'oxyde d'uranium légèrement enrichi.
B.I.S.T. n° 127, Juin 1967, p. 43-60

[16] Note CEA n° 969 - Rapport semestriel du D.C. n° 4
Juin 67 - Nov. 67, pp. 163-188

[17] Note CEA n° 1044 - Rapport semestriel du D.C. n° 5
Déc. 67 - Mai 68, pp. 163-179

REMERCIEMENTS

Ce travail n'a pu être réalisé qu'avec la collaboration d'une équipe nombreuse. Nous tenons à remercier plus particulièrement Messieurs MARILLIER et DONCIEUX, de Saint-Gobain Techniques Nouvelles, qui ont pris une part très importante dans l'organisation de ces études, ainsi que Messieurs MIQUEL, BALLET, ISAAC et DARGIER de SAINT-VAULRY, qui ont mené ces travaux avec dynamisme et compétence.

Tableau I - 1er CYCLE

		Valeurs théoriques	Essais actifs (α) $\frac{\text{Pu VI}}{\text{Pu total}} = 40\%$	Essais actifs ($\alpha\gamma$) sans HF	Solution retenue pour l'usine	Essais actifs ($\alpha\gamma$) avec HF
Nbre d'étages	Extraction	8	8	8	9	9
	Lavage	8	8	8	8	8
	Réextraction	11	13	13	12	13
Rapport des volumes A/O	Extraction	0,73	0,71	0,68	0,71	0,71
	Lavage	0,2	0,2	0,2	0,2	0,2
	Réextraction	1,05	1,05	1,15	1,15	1,25
Raffinats PC 1	U ($mg.l^{-1}$)	20	0,7	5		5
	Pu ($mg.l^{-1}$)	0,7	1,2	1		1
Solvant sortant de réextraction SR 1	U ($mg.l^{-1}$)	40	65	3		1
	Pu ($mg.l^{-1}$)	0,4	0,2	0,2		0,1

Tableau II - 2ème CYCLE

		Valeurs théoriques	Essais actifs α	Essais actifs αγ	Solution retenue pour l'usine
Nombre d'étages	Extraction	9	14	14	14
	Lavage	7	7	7	7
	Extraction IV	11	11	11	11
	Extraction V	8	8	11	9
Rapport des volumes A/O	Extraction	1,56	1,56	1,54	1,54
	Lavage	0,125	0,125	0,125	0,125
	Extraction V	1,05	1,05	1,15	1,15
Raffinats PC 2	U (mg.l^{-1})	10	0,7	10	
	Pu (mg.l^{-1})	0,66	1	2,5	
Solvant sortant de la réextraction SR 2	U (mg.l^{-1})	24	18	10	
	Pu (mg.l^{-1})		0,1	0,05	
Pu contenu dans U (µg.l^{-1})		0,6	100	100	
U contenu dans Pu (g.l^{-1})		-	2	0,5	1

Tableau III - 3ème CYCLE PLUTONIUM

		Valeurs théoriques	Essais actifs α	Essais actifs $\alpha\gamma$	Solution retenue pour l'usine
Nombre d'étages	Extraction	9	9	9	9
	Lavage	6	6	6	6
	Extraction IX	11	13	13	13
Raffinats PC 3	Pu ($mg.l^{-1}$)	0,6	0,1	0,13	
U dans Pu ($mg.l^{-1}$)		75	6	1	
Pu dans le solvant recyclé ($mg.l^{-1}$)			0,5	1,25	

Tableau IV - FACTEURS DE DECONTAMINATION MOYENS

(lorsque les précipités d'interphases de l'extraction I sont périodiquement chassés)

	Résultats prévus			Moyenne des résultats à 20 % près				
	Zr + Nb	Ru	Activité totale	Zr + Nb	Ru + Rh	Ce + Pr	Cs	Activité totale des émetteurs
1er cycle	400	700	700	U-Pu 150	5.000	30.000	9.000	900
2e cycle	400	120	500	U 2.000	40	60	50	600
				Pu 140	30	25	40	100
1er et 2e cycles	160.000	84.000	350.000	U 300.000	230.000	1.600.000	400.000	600.000
				Pu 20.000	150.000	700.000	400.000	100.000
3e cycle U	75	10	20	L'essai n'a pas été réalisé mais, compte tenu d'un lavage peu acide, on admet un FD de 10				
3e cycle Pu	150	10	50	1.200	100	1.000	1.000	1.000
U	1,2 10^7	10^6	5 10^6	3 10^6	2,5 10^6	1,5 10^7	4 10^6	6 10^6
Pu	2,4 10^7	10^6	1,5 10^7	2,5 10^7	1,5 10^7	7 10^8	4 10^8	10^8

Tableau V - NIVEAUX D'ACTIVITE PAR KILOGRAMME DE MATIERE FISSILE

		Zirconium + Niobium	Ruthénium	Activité totale des émetteurs γ
Entrée 1er cycle (Ci)	U	220	170	1.400
	Pu	20.000	16.000	120.000
Entrée 2e cycle (Ci)	U	1,3	0,04	1,4
	Pu	115	3,3	140
Entrée 3e cycle (m Ci)	U	0,6	0,75	2,3
Entrée 3e cycle (m Ci)	Pu	760	120	1.300
Solutions finales (µ Ci)	U	60	70	240
	Pu	600	100	700

Tableau VI - PERTES DE MATIERE FISSILE

	Pertes prévues				Pertes mesurées			
	Uranium		Plutonium		Uranium		Plutonium	
	%	Concentration mg.l^{-1}	%	Concentration mg.l^{-1}	%	Concentration mg.l^{-1}	%	Concentration mg.l^{-1}
1er cycle								
Solution épuisée de l'extraction I PC1	0,020	20	0,045	0,71	0,01	5 à 10	0,02	0,3
Solvant sortant de l'extraction II SD1	0,04	40	0,04	0,4	0,01	10 au pot 12	0,02	0,2
2e cycle								
Solution épuisée de l'extraction III PC2	0,03	20	0,13	0,71	0,01	3 à 10	0,43	2,5
Solvant sortant de l'extraction IV	-	-	-				-	0,1
Solvant sortant de l'extraction V	0,04	24				3 au pot 10		
3e cycle U								
Solution épuisée de l'extraction VI	0,03	13	-	$0,6.10^{-3}$				
Solvant sortant de l'extraction VII	0,03	21						
3e cycle Pu.								
Solution épuisée de l'extraction VIII	0,001	1,5	0,035	0,6		2	0,001	0,1
Nitrate de Pu sortant de l'extraction IX	0,005	75				1 à 2		0
Total	0,2 %		0,25 %		0,1 %		0,5 %	

Tableau VII - RETENTION DU ZIRCONIUM DANS L'EXTRACTION I

(rapport A/O = 0,72)

	N° des essais γ	Solution aqueuse chargée	Solution aqueuse épuisée	Solvant chargé	Pertes de Zr %
		^{95}Zr en curie par litre			
Essais sans HF	1	65	30	non dosé	35
	2	35	15	0,3	40
	3	38	44	non dosé	50
	4	44	17	0,3	45
avec HF	5	35	35	néligeable	0

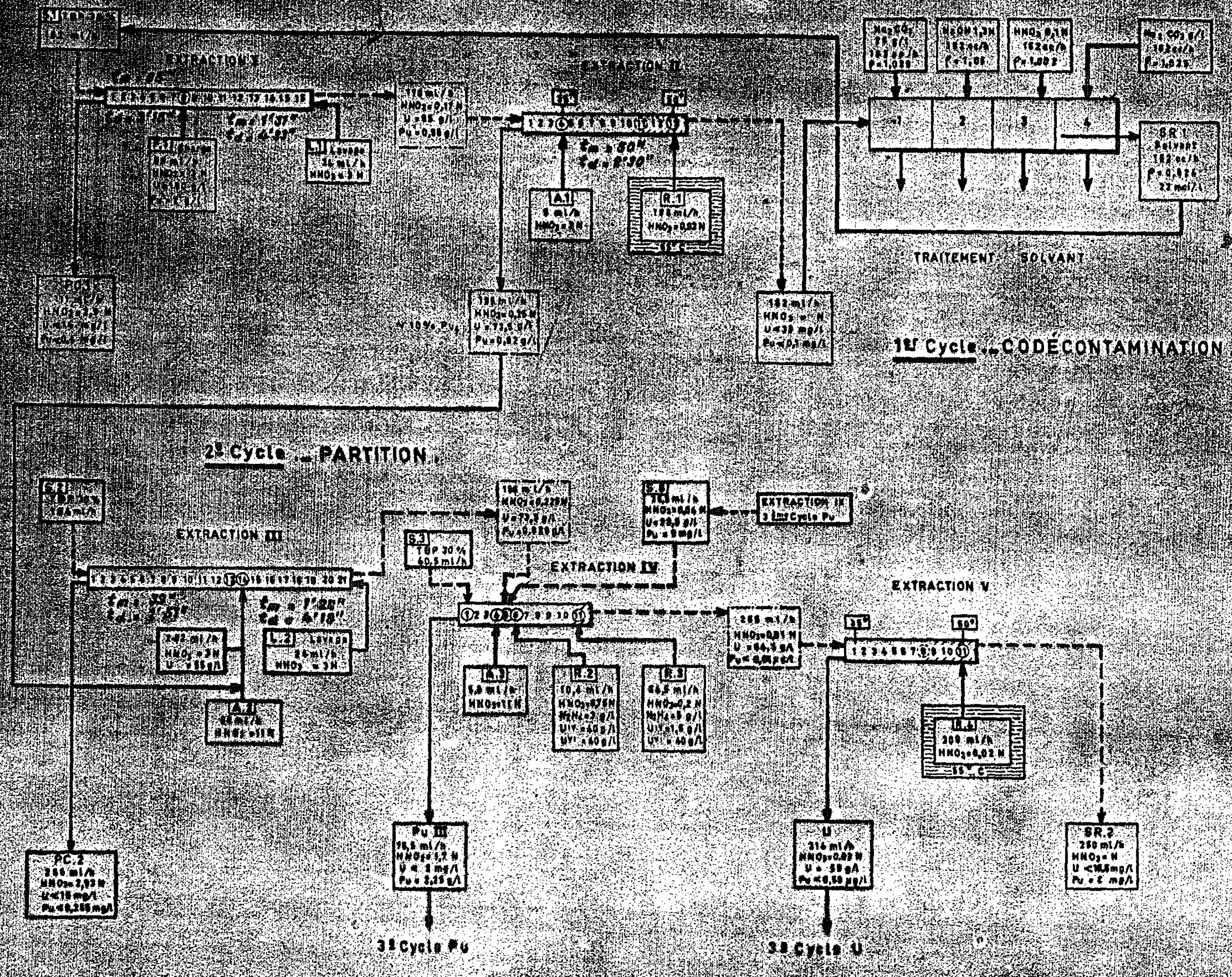

t_m = temps de contact dans le mélangeur.
t_d = temps de contact dans le décanteur.

Fig. 1.- "CYRANO" - Schémas de traitement pour les UO_2 légèrement enrichis et fortement irradiés.

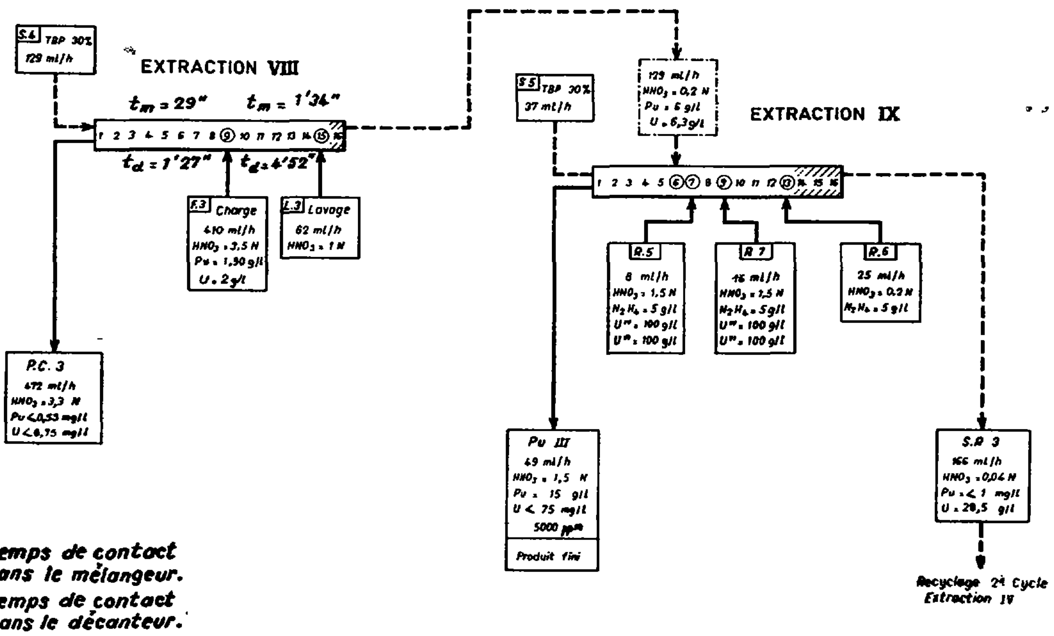

t_m = *temps de contact dans le mélangeur.*

t_d = *temps de contact dans le décanteur.*

FIG. 2.— 3ème CYCLE Pu

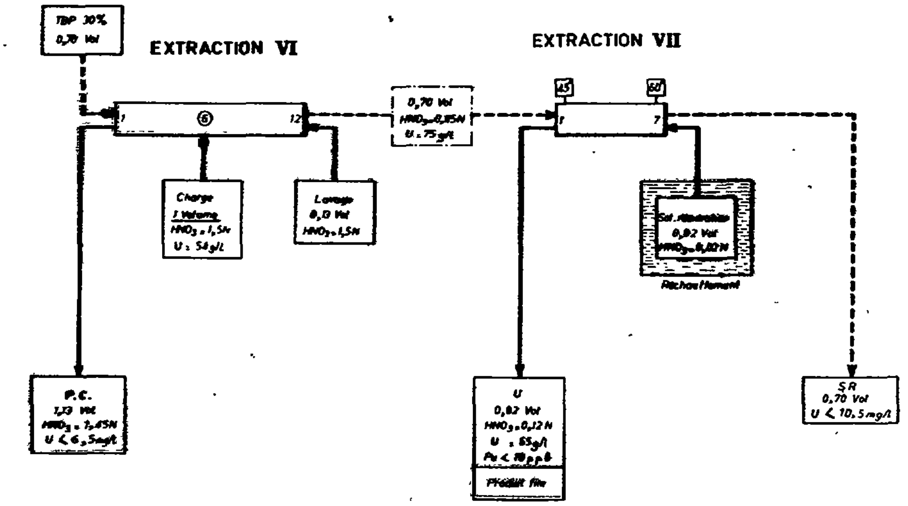

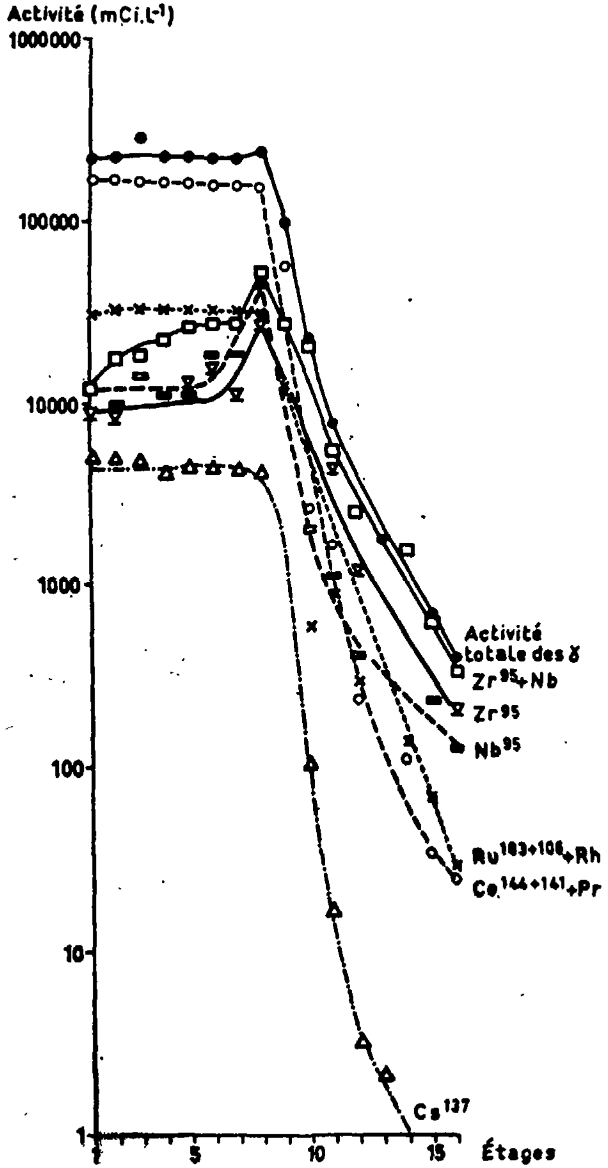

FIG. 4. — *EXTRACTION 1 - Distribution des émetteurs γ phase aqueuse (essai sans FH).*

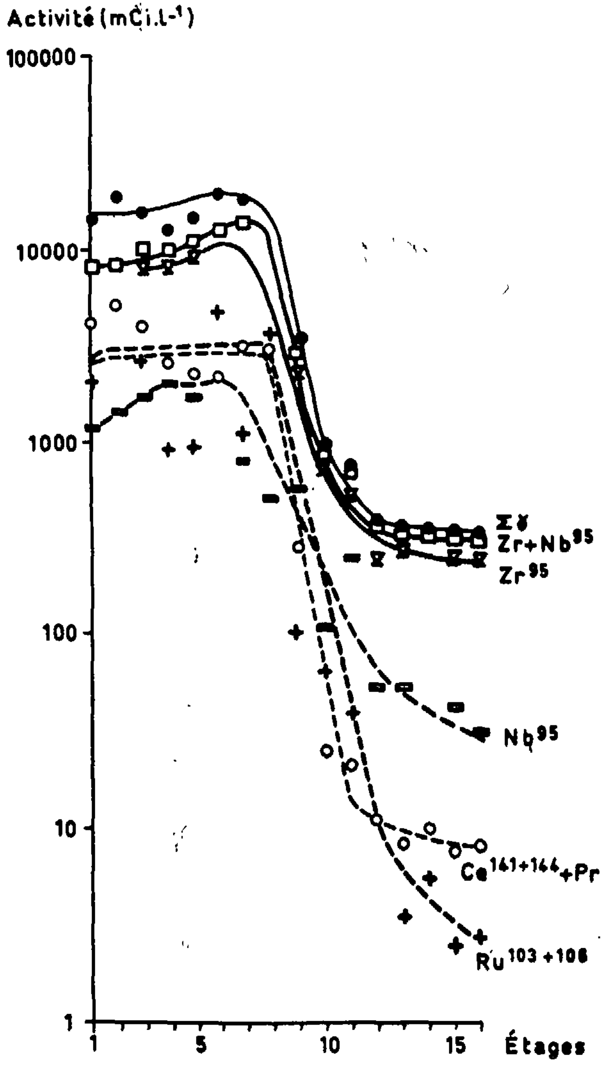

FIG. 5. — *EXTRACTION 1 - Distribution des émetteurs γ phase solvant (essai sans FH).*

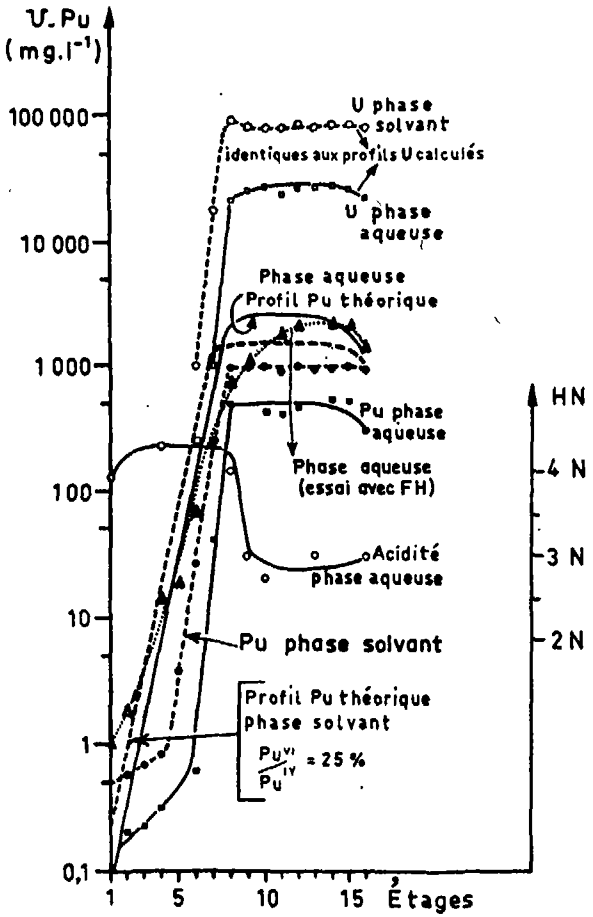

FIG. 6. — *Profils de concentration* [$U—Pu—H^+$]. *(Extraction I).*

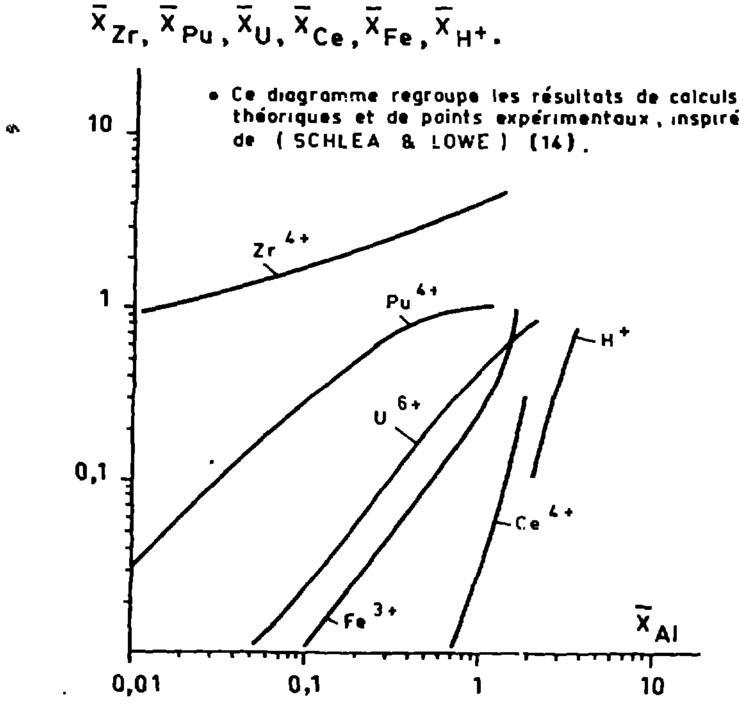

Fig. 7.– Répartition des complexes fluorés en milieu nitrique.

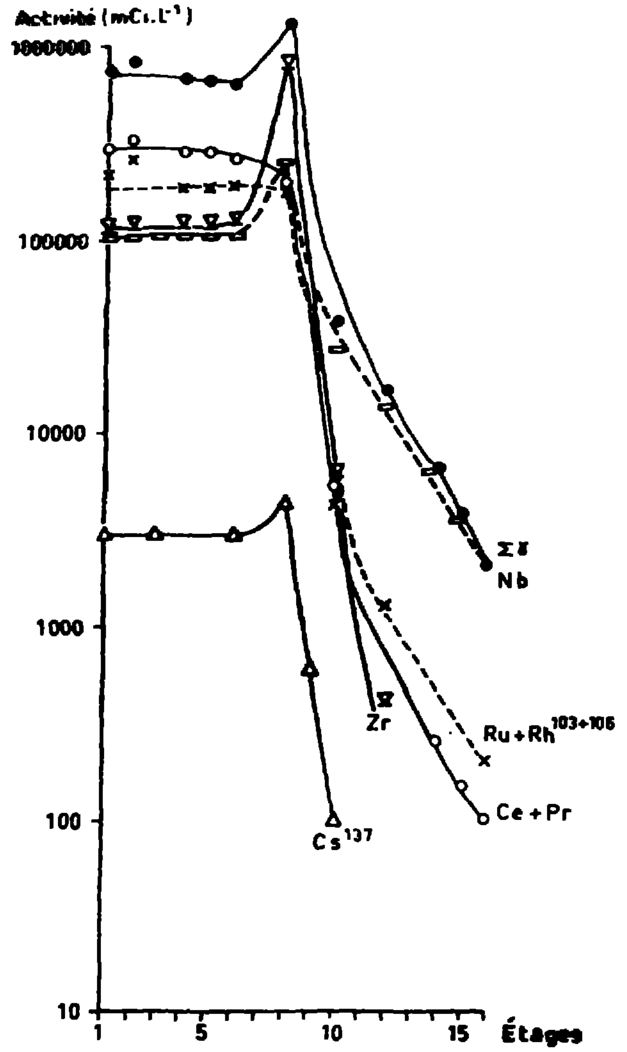

FIG. 8. — *EXTRACTION 1 - Distribution des émetteurs γ en phase aqueuse (essai avec FTI).*

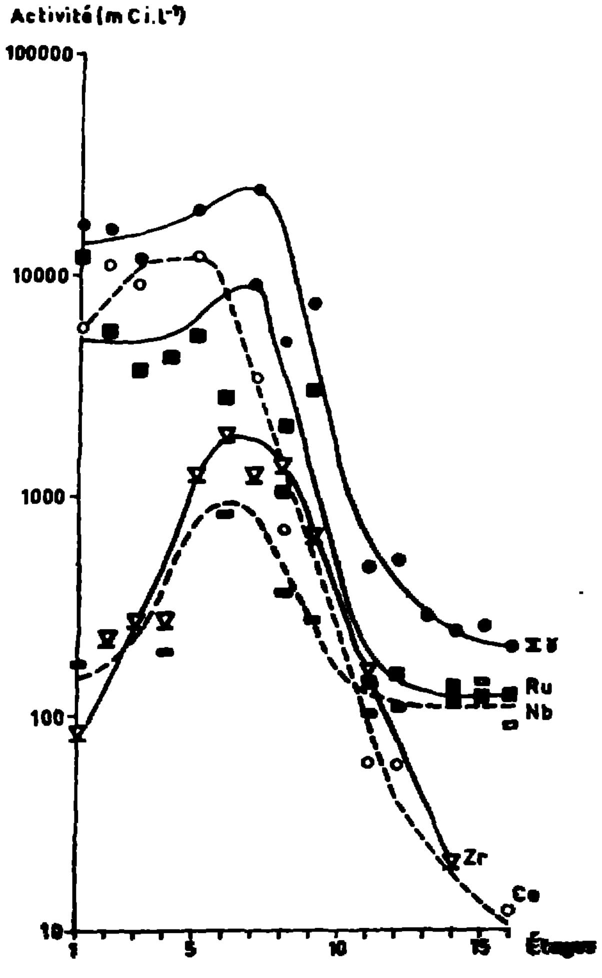

FIG. 9. — *EXTRACTION 1 - Distribution des émetteurs γ en phase solvant (essai avec FTI).*

TRAITEMENT DES AIGUILLES IRRADIEES
DU REACTEUR A NEUTRONS RAPIDES RAPSODIE

Xavier TALMONT et Pierre MIQUEL

COMMISSARIAT A L'ENERGIE ATOMIQUE
Direction des Matériaux et Combustibles Nucléaires
Département de Chimie
Services de Chimie des Combustibles Irradiés
Service de Génie Chimique Radioactif
Section de Traitement des Combustibles au Plutonium

ABSTRACT

The method adopted for treating fuels irradiated in the core of Rapsodie is based on the selective extraction of uranium and plutonium with tributyl phosphate, without separation of the two elements. The fuel needles are cut, and mixed oxide of uranium and plutonium is then dissolved with nitric acid. Uranium nitrate and plutonium nitrate are separated from the fission products in three liquid-liquid extraction cycles and then reprecipitated with ammonia.

This method was tried out and developed in the Fontenay-aux-Roses laboratories. The last tests performed in the "Cyrano" shielded-cell chain were with fuel irradiated at 40 000 MWd/t in Rapsodie.

A plant named "AT1", which can treat one core of Rapsodie per year, has been built at the La Hague centre. It started functioning in January 1969. Despite some difficulties due to the presence of insoluble fission products, the results are very satisfactory as regards both the yields of enriched uranium and plutonium and the decontamination factors. The finished products are well up to the specifications laid down.

RESUME

Le procédé retenu pour le traitement des combustibles irradiés dans le coeur de Rapsodie est basé sur l'extraction sélective de l'uranium et du plutonium par le phosphate tributylique, sans séparation des deux éléments. L'oxyde mixte d'uranium et de plutonium est dissous par l'acide nitrique après cisaillage des aiguilles. Les nitrates d'uranium et de plutonium sont séparés des produits de fission en trois cycles d'extraction liquide-liquide puis reprécipités ensemble par l'ammoniaque.

Ce procédé a été expérimenté et mis au point dans les laboratoires de Fontenay-aux-Roses. Les derniers essais effectués dans la chaîne de cellules blindées "Cyrano" ont été réalisés avec du combustible irradié à 40.000 MWj/t dans Rapsodie.

Un atelier nommé "AT1" pouvant traiter un coeur de Rapsodie par an a été construit au Centre de La Hague. Il est entré en fonctionnement en janvier 1969. Malgré quelques difficultés occasionnées par la présence de produits de fission insolubles, les résultats obtenus sont très satisfaisants tant pour le rendement en uranium enrichi et en plutonium que pour les facteurs de décontamination. Les spécifications imposées au profuit fini sont largement respectées.

I - INTRODUCTION

Les études concernant le traitement des combustibles irradiés des réacteurs rapides ont été commencées en France avec le projet de construction du réacteur expérimental Rapsodie. Le combustible envisagé initialement était un alliage ternaire U - Pu - Mo. Il a été abandonné en faveur de l'oxyde mixte UO_2-PuO_2 gainé d'acier inoxydable qui est représentatif du combustible de la filière par sa composition : PuO_2 25 % - UO_2 75 %, à l'exception toutefois de l'enrichissement de l'uranium : 60 %. C'est cette composition qui a conduit à la réalisation d'un atelier pour le traitement séparé du combustible du coeur [1]. Le taux d'irradiation limite fixé pour le combustible actuel est 50.000 $MWj.t^{-1}$ mais certains assemblages expérimentaux pourront être plus irradiés.

Le procédé retenu est dérivé du procédé "Purex" basé sur la séparation des nitrates d'uranyle et de plutonium par extraction au phosphate tributylique. Il a été estimé d'après les résultats d'exploitation de l'usine de Marcoule et les nombreuses publications étrangères que trois cycles d'extraction étaient nécessaires pour obtenir un produit suffisamment décontaminé. Le souci de simplicité nous a conduit à mettre au point un procédé excluant :

- la séparation uranium-plutonium, bien que dans le cadre de la filière cette opération apparaisse nécessaire surtout si l'on traite simultanément le coeur et au moins les couvertures axiales. Mais ce problème de séparation est actuellement bien résolu particulièrement en France par l'utilisation du nitrate uraneux.

- les ajustages de valence de plutonium : il faut extraire U VI, Pu IV et Pu VI.

- les concentrations incertycles par évaporation qui nécessitent des investissements non justifiés pour une installation de faible capacité (1 $kg.j^{-1}$).

Les études du procédé ont été réalisées dans les laboratoires du Département de Chimie à Fontenay-aux-Roses, dans la cellule "Cyrano" [2] pour les essais sur combustibles irradiés.

L'atelier de traitement du combustible irradié (AT1) est implanté au Centre de La Hague. Il a effectué ses premiers essais de retraitement au début de cette année sur 25 kilogrammes d'oxydes irradiés dans Rapsodie entre 150 et 40.000 $MWj.t^{-1}$.

La possibilité d'étudier au laboratoire les problèmes qui se posent dans l'atelier de retraitement devrait permettre de définir un procédé particulièrement bien adapté au combustible de la filière à neutrons rapides.

II - DISSOLUTION DU COMBUSTIBLE

2.1 - Vitesse de dissolution

Les vitesses de dissolution ont d'abord été mesurées sur des pastilles de céramique UO_2-PuO_2 non irradiées en fonction de :

- la teneur en PuO_2
- la concentration en acide nitrique et en acide fluorhydrique de la solution d'attaque.

Les résultats obtenus ont été assez dispersés selon les différents lots de pastilles utilisés pour ces essais. Ils ont néanmoins montré que l'on pouvait définir des conditions industrielles telles que la dissolution de l'oxyde serait totale à l'ébullition en 6 heures pour :

- une teneur en PuO_2 inférieure à 35 %
- une concentration en acide nitrique supérieure à 8 moles litre^{-1}.

L'addition d'acide fluorhydrique dans ces conditions n'est pas nécessaire, cette observation prouvant que, bien qu'utilisant le mélange de poudre, le procédé de fabrication produit des pastilles constituées d'une solution solide assez homogène.

Les essais sur des oxydes irradiés ont montré que l'irradiation augmentait considérablement les vitesses de dissolution. L'une des causes doit être la fragmentation de l'oxyde irradié. Lors des derniers essais réalisés dans la cellule Cyrano sur des aiguilles irradiées dans Rapsodie à 40.000 MWj.t^{-1} on a constaté que la dissolution de l'oxyde était totale en moins de trois heures pour des concentrations d'acide nitrique comprises entre 6 et 12 moles.l^{-1} avec ou sans acide fluorhydrique. (figure I)

2.2 - Corrosion des morceaux de gaine pendant la dissolution.

La corrosion des gaines irradiées en présence de sodium a été observée la première fois sur des échantillons d'oxydes gainés d'acier 304 irradiés dans EL.3. Certains morceaux de gaine avaient subi une corrosion intergranulaire telle qu'on a recueilli une poudre métallique en fin de dissolution.

Les gaines des aiguilles irradiées de Rapsodie, en acier inoxydable 316, s'oxydent superficiellement. La couche d'oxyde contribue à la formation de la poudre insoluble que l'on retrouve en fin de dissolution. Celle-ci contient en effet du ^{54}Mn résultant de l'activation de la gaine.

La corrosion des gaines pendant la dissolution croît avec le taux d'irradiation du combustible. Dans AT1, où les morceaux de gaine séjournent dans le panier du dissolveur pendant plusieurs dissolutions, une concentration en fer de 20 g/l a été mesurée lors de la dissolution d'aiguilles irradiées entre 35.000 et 40.000 MWj.t^{-1}. La solution d'attaque avait pour composition : HNO_3 12 moles.l^{-1}, HF 0,035 mole.l^{-1}, $Al(NO_3)_3$ 0,035 mole.l^{-1}.

Au cours de dissolutions d'aiguilles irradiées à 40.000 $MWj.t^{-1}$ faites dans Cyrano, on a obtenu 2,5 $g.l^{-1}$ de fer en 6 heures. Au bout de ce même temps, la concentration en fer n'est que 0,5 g/l pour une gaine non irradiée attaquée à l'ébullition par une solution HNO_3 11 $moles.l^{-1}$, FNa 0,05 mole l^{-1}, $Al(NO_3)$ 0,05 mole l^{-1}; La vitesse de corrosion des gaines croît avec la concentration en acide nitrique et en présence d'acide fluorhydrique, mais semble diminuer en fonction du temps. Jusqu'à 40.000 $MWj.t^{-1}$, les morceaux de gaine restent néanmoins entiers. Ces observations permettent de penser que ce phénomène est lié plus au temps de séjour des aiguilles dans le sodium à haute température qu'à l'irradiation neutronique et qu'il serait dû à une évolution de la surface des gaines en contact avec le sodium.

Ces résultats obligeront à modifier les conditions de dissolution pour minimiser l'attaque des gaines. En effet, des concentrations élevées en fer accélèrent la corrosion de certains aciers inoxydables austénitiques par l'acide nitrique à l'ébullition. C'est le cas de l'uranus 65 du dissolveur d'AT1.

2.3 - Comportement des produits de fission

Les concentrations de produits de fission dans le combustible irradié des réacteurs rapides sont élevées : environ 5 % en poids dans le cas de Rapsodie et on espère atteindre 10 % pour la filière. A ce niveau, pour les éléments dont le rendement de fission est élevé, on quitte la chimie des traces.

Sur la figure I, on voit l'évolution de quelques produits de fission (^{95}Zr, ^{95}Nb, ^{106}Ru, ^{103}Ru, ^{144}Ce ...) au cours de la dissolution, mesurée par spectrométrie γ. Par comparaison aux concentrations que l'on devrait obtenir d'après les rendements de fission on s'aperçoit qu'une grande partie du niobium et du ruthénium ne se dissout pas. Cette observation a été confirmée par les essais actifs d'AT1. Au cours des opérations de rinçage qui ont suivi ces essais on a trouvé que les concentrations de ces deux éléments sont restées importantes et ont décru beaucoup moins vite que celle du zirconium. Le rapport des activités de ces deux éléments a également peu varié, ce qui ferait penser que leur limite de solubilité a été atteinte au cours de la dissolution.

On a signalé des précipitations métalliques dans les combustibles oxydes irradiés [3][4] et mentionné que ces alliages de métaux nobles étaient insolubles dans l'acide nitrique. Il n'est donc pas surprenant que l'on ait un insoluble en fin de dissolution. L'analyse qualitative de solide par spectrographie d'émission y a décelé la présence des éléments suivants : Mo, Mn, Nb, Ru, Rh, Sn, As, Ag, Si, Fe, Zr, Cr, Ni, Ti, Pd, Al, Ca, Zn et des traces de quelques autres. On y trouve certains éléments constituant les précipités métalliques mais ni plutonium, ni uranium. Le molybdène et le manganèse sont les principaux constituants de cet insoluble.

Le molybdène a un rendement de fission élevé, environ 11 % du poids de la matière fissile consommée. Dans les conditions finales de dissolution auxquelles nous aboutissons - U + Pu - 250 $g.l^{-1}$, H^+ = 9 N - la concentration en molybdène devrait être 1,1 $g.l^{-1}$ pour un taux d'irradiation de 40.000 $MWj.t^{-1}$ alors que la solubilité de l'acide molybdique est inférieure à 0,5 g/l.

Le manganèse, décelable également par l'émission γ de son isotope de masse 54 produit par activation, provient de l'acier des gaines.

2.4 - Clarification de la solution de dissolution

On opère par filtration dans AT1, après une prédilution par de l'acide nitrique normal qui amène la solution à la composition suivante : U + Pu = 144 $g.l^{-1}$, H^+ = 6 N. Le colmatage du filtre en acier inoxydable fritté est très rapide, sa capacité de filtration a été en moyenne de 15 l dm^{-2}.

Pour AT1, la clarification est nécessaire pour éviter le bouchage des pieds des élévateurs à air et l'accumulation des insolubles dans les batteries de mélangeurs-décanteurs. Cette accumulation, outre qu'elle pourrait gêner le fonctionnement hydraulique, aurait pour conséquence un accroissement considérable de la dose de rayonnement absorbée par le solvant. L'expérience de l'usine de Marcoule a montré que la dose de rayonnement reçue par le phosphate tributylique, du fait de l'accumulation de produits de fission précipités ($^{95}Zr-^{95}Nb$) dans les décanteurs, pouvait être beaucoup plus importante que celle due à la radioactivité de la solution traitée. Ce phénomène secondaire, surtout important avec des mélangeurs-décanteurs, fait que les calculs de doses reçues par le solvant en tenant compte uniquement des produits de fission présents en solution peuvent être assez illusoires.

2.5 - Contrôle des gaines avant rejet

L'atelier AT1 est doté d'un dispositif de mesure de la matière fissile présente dans les morceaux de gaine à leur sortie du dissolveur. Il utilise le comptage des neutrons retardés émis par certains produits de fission après que le panier contenant les gaines ait été irradié par un flux de neutrons.

La source du type (D, T) émet environ 10^{10} neutrons de 14 MeV par seconde. Ceux-ci sont ralentis par une couronne de grenaille de polyéthylène entourant le panier. Ce dispositif et la méthode de mesure utilisés /5/ sont voisins de ceux mis au point à Oak-Ridge /6/. La sensibilité maximale obtenue pour un rapport signal/bruit de fond égal à l'unité correspond à environ 20 mg de ^{235}U.

2.6 - Dégagement des gaz de fission

On a détecté du krypton dans l'air de ventilation de la cellule de cisaillage et des évents du dissolveur :

- à l'ouverture des conteneurs en aluminium soudé servant au transport des aiguilles irradiées (111 aiguilles par conteneur, soit environ 10 kg d'oxyde)
- au cisaillage des aiguilles
- pendant la dissolution. Le dégagement de krypton permet de suivre l'évolution de celle-ci
- pendant le transfert de la solution de dissolution.

Etant donnée la capacité d'AT1 il n'y a aucun problème de radioprotection. Mais la dissolution de charges importantes pourrait provoquer des "bouffées" de forte concentration.

III - EXTRACTIONS

3.1 - Schéma des extractions (figure II)

3.1.1 - Concentration du solvant en phosphate tributylique.

Une teneur de 30 % en volume a été retenue pour les raisons suivantes :

- C'est pour cette composition que l'on disposait du maximum de données expérimentales sur les coefficients de partage de l'uranium, du plutonium et des produits de fission.
- Elle n'est pas très éloignée de la valeur 25 à 27 % pour laquelle nous avions obtenu le maximum de débit d'uranium à l'engorgement en colonnes pulsées /1/.
- Le coefficient de partage du plutonium (IV) croissant en fonction de la concentration en phosphate tributylique avec un exposant supérieur à l'unité, plus celle-ci est forte plus est petit le rapport du débit de phosphate tributylique au débit de plutonium nécessaire pour obtenir un rendement donné avec un nombre d'étages donné. Ceci doit diminuer la radiolyse du phosphate tributylique.

Il a été vérifié expérimentalement que, avec le schéma choisi, il n'y avait pratiquement aucun risque de démixtion de la phase organique, les concentrations de plutonium dans cette phase étant suffisamment inférieures à celles auxquelles apparaît ce phénomène.

Le diluant habituellement utilisé en France - le tétrapropylène hydrogéné appelé couramment "dodécane" - a été conservé, aucune étude comparative n'ayant prouvé la supériorité d'un autre diluant tel que le dodécane normal en particulier.

3.1.2 - Rapports de débits - concentrations en acide nitrique.

Ils ont d'abord été déterminés pour l'extraction du plutonium à la valence IV. Au fil des essais, nous avons été amenés à les modifier pour tenir compte de la formation de nitrate de plutonyle par dismutation au cours de la dissolution et des réextractions en milieu peu acide principalement. Les débits de solvant ont été augmentés de même que les concentrations en acide nitrique des extractions.

Les rendements obtenus pour le plutonium au cours des essais actifs d'AT1 ont été de 99,999 % au 1er cycle et de 99,98 % pour chacun des deux cycles suivants.

3.2 - Comportement des produits de fission dans les extractions

3.2.1 - Taux de saturation du solvant

A la sortie du lavage du 1er cycle le taux de saturation du solvant est à 55 % de la limite théorique. Il est légèrement inférieur aux cycles suivants. Les coefficients de partage des produits de fission sont pour cette valeur nettement plus élevés que ceux correspontant aux taux de saturation atteints lors du traitement d'uranium naturel ou faiblement enrichi irradié. Cet effet est compensé néanmoins par la dilution plus forte des phases aqueuses qui permet d'avoir un rapport des débits solvant/phase aqueuse plus faible.

3.2.2 - Influence de l'acidité.

Pour extraire quantitativement le plutonium sans ajustage de valence nous avons été contraints à augmenter les concentrations en acide nitrique dans les extractions (HNO_3 4 N) et les lavages (HNO_3 3 N). On sait que le coefficient de partage du ruthénium décroît quand l'acidité croît. Cela est d'autant plus favorable que le rendement en ^{106}Ru lors de la fission du plutonium par les neutrons rapides est d'environ 10 fois supérieur à celui obtenu lors de la fission de l'uranium 235 par les neutrons thermiques.

L'incidence sur les terres rares est plus faible, l'augmentation de leur coefficient de partage pouvant être compensée en augmentant le débit de lavage du solvant chargé.

C'est surtout pour le zirconium qu'une acidité élevée est néfaste. Mais aux niveaux de radioactivité que l'on rencontre dans le retraitement du combustible des réacteurs rapides ce n'est pas l'extraction du Zr par le phosphate tributylique qui détermine le facteur de décontamination en cet élément, ce sont les réactions du zirconium avec les produits de radiolyse du phosphate tributylique : acides di- et monobutyl phosphorique.

3.2.3 - Complexation du zirconium par l'acide fluorhydrique

La comparaison de deux essais au laboratoire du premier cycle d'extraction avec des oxydes mixtes irradiés dissous dans un cas sans acide fluorhydrique, dans l'autre avec, fait apparaître une nette amélioration du facteur de décontamination en zirconium quand la solution d'U + Pu contient cet acide [8].

Au fur et à mesure que nous avons disposé pour ces essais d'extraction d'oxydes de plus en plus irradiés (échantillons d'oxydes mixtes irradiés pour étude du combustible, éléments combustibles d'EL.3 en uranium enrichi à 4 % irradiés à 20.000 MWj.t^{-1} et enfin d'aiguilles irradiées de Rapsodie à 40.000 MWj.t^{-1}) nous avons obtenu dans la batterie d'extraction des précipités d'interphase de plus en plus abondants. L'addition d'acide fluorhydrique à la dissolution permet de réduire considérablement leur vitesse de formation : il est difficile de dire qu'ils sont totalement supprimés car il y a pratiquement toujours dans toute extraction au phosphate tributylique en mélangeurs-décanteurs accumulation de solides aux interfaces.

L'étude faite à Savannah River [9] sur les complexes du fluor avec le zirconium, l'uranium, le plutonium et l'aluminium a été utilisée pour calculer les quantités de fluor nécessaires à une complexation suffisante du zirconium pour empêcher son extraction, en présence des trois autres éléments et en tenant compte de l'acidité [10][11][12]. L'aluminium est ajouté pour compenser l'effet dépressif du fluor sur le coefficient de partage du plutonium dans les étages d'extraction où les concentrations sont faibles. Par ordre de stabilité croissante de leurs complexes fluorés on a, respectivement, l'aluminium, le plutonium et le zirconium. Avec un rapport Al/F = 3 dans les solutions d'alimentation et de lavage la complexation du zirconium est encore suffisante mais par contre dans les étages où la concentration en plutonium est faible l'action de masse de l'aluminium diminue la complexation de cet élément par le fluor.

Quant à la nature des précipités d'interface formés par le zirconium il est intéressant de mentionner qu'il ne s'en forme pas dans l'extraction quand le solvant contient uniquement de l'acide dibutylphosphorique mais qu'ils apparaissent dès qu'il y a de l'acide monobutylphosphorique. Cela s'explique par la solubilité importante du dibutylphosphate de zirconium dans le solvant et par le coefficient de partage très élevé de l'acide correspondant en milieu très acide. Ceci est à rapprocher du comportement du fer dans l'extraction. Le dibutylphosohate de fer est très peu soluble, tant en phase aqueuse qu'en phase organique. Craignant la précipitation de ce sel dans les extractions nous avons extrait à contre-courant de l'uranium d'une solution contenant du nitrate ferrique par un solvant contenant 1,6 $g.l^{-1}$ d'acide dibutylphosphorique. Il ne se forme pas de précipités, le produit de solubilité n'étant atteint dans aucune phase, le fer restant en phase aqueuse et l'acide dibutylphosphorique en phase organique.

3.3 - Résultats des essais

Ils sont groupés dans le tableau 1 pour les essais de laboratoire. Lors des essais actifs d'AT1 on a obtenu au 1er cycle pendant le traitement de combustible irradié à 35 - 40.000 $MWj.t^{-1}$:

F.D. (Ru) : 5×10^4
" (Nb) : $4.3\ 10^4$

Le facteur de décontamination en zirconium était tel que cet élément n'était pas mesurable par spectrométrie γ (Ge-Li) simultanément à la mesure du ruthénium et du niobium. Les deux cycles de décontamination suivants travaillent dans des conditions plus habituelles. Le mélange d'oxydes $(UO_3 + PuO_2)$ produit contenait $2,5\ 10^{-2}$ µCi de ^{95}Nb et $2,5\ 10^{-2}$ µCi de $^{103}Ru + {}^{106}Ru$ par gramme d'U + Pu ce qui est nettement inférieur au microcurie par gramme demandé. Il n'y a pas été décelé d'autres émetteurs γ.

3.4 - Traitement du solvant

Au 1er cycle d'AT1 il est uniquement alcalin, en cinq étages. Les essais ont été de trop courte durée pour en tirer des conclusions. On note, ce qui n'a rien de surprenant, une accumulation de ruthénium dans le solvant.

IV - CONCLUSIONS

A la lumière des nombreux essais réalisés dans les laboratoires du Département de Chimie à Fontenay-aux-Roses et des résultats satisfaisants des essais actifs de l'atelier de traitement du combustible irradié de Rapsodie il est légitime de penser que le traitement par voie aqueuse apportera une solution satisfaisante au traitement des oxydes mixtes UO_2-PuO_2 irradiés dans les réacteurs rapides.

Toutefois les études en cours doivent être poursuivies pour améliorer le procédé et étendre ses possibilités. En particulier, la diminution du temps de refroidissement a une incidence économique importante.

Nous pensons que les efforts doivent être orientés vers la recherche des meilleures conditions de dissolution, d'un prétraitement efficace - qui pourrait être une clarification, la concentration de certains produits de fission étant limitée par leur solubilité - et d'une diminution des effets secondaires dus à la dégradation du solvant par des moyens chimiques ou technologiques.

V - REFERENCES

[1] P. AMAURY - X. TALMONT
AT1, maillon du programme d'étude de la filière surrégénératrice française.
Energie nucléaire - vol. 9 - N° 2 - mars-avril 1967

[2] G. LEFORT - PAQUIS R.
Cyrano - A new type of chemistry call for high specific activity at Fontenay-aux-Roses
Proceedings of the 12 Conference on remote systems technology -
ANS nov. 1964, pp. 15-24

[3] J.I. BRAMMAN - R.M. SHARPE
Metallic fission product inclusions in irradiated oxyde fuels
Journal of Nuclear materials (1968) p. 201-205
North Holland publishing Co - Amsterdam

[4] J.H. DAVIES and R.F. BAYLE
On the composition of metallic ingots formed in high performance ceramics fuels elements
TRANS ANS Vol. 9 N° 1 pp. 63-64

[5] L. BELIARD - P. JANOT
Détermination de la quantité de matière fissile présente dans un échantillon par irradiation au moyen d'une source pulsée de neutrons et comptage des neutrons retardés.
Rapport C.E.A. R 3272 - Juillet 1967

[6] J.E. STRAIN - W.J. ROSS - G.A. WEST - J.W. LANDRY
Design and evaluation of a delayed neutron peached-hull Monitor
ORNL - 4135 - Feb. 1968

[7] J. DURANDET - X. TALMONT
Influence de la variation des propriétés physiques sur le fonctionnement des colonnes à pulsation.
Bulletin d'informations scientifiques et Techniques
n° 42 - Juillet-août 1960

[8] Note CEA N 816 - Rapport semestriel du D.C.
Juin 66 - Novembre 66, p. 249-250

[9] O.S. SCHLEA - J.I. LOWE
Fluorine complexing of Pu (IV) and U (VI) in solution containing Al (III) et Zr (IV)
DP 842 - 1964

[10] P. FAUGERAS - X. TALMONT
Progress in coordination chemistry
Jerusalem 1968

[11] Rapport semestriel du D.C.
décembre 66 - mai 67 pp. 163-188 N 856

[12] Rapport semestriel du Département de Chimie
décembre 1967 - mai 1968 pp. 163-170
Note CEA N 1044

Ordre chronologique des essais (temps de marche en actif)	Caractéristiques des éléments traités	Refroidissement au moment des essais	Émetteurs γ dans la solution d'attaque (Ci.l^{-1}) U + Pu = 72 g.l^{-1}				Concentrations $[F^-]$ et $[Al]$ dans les solutions d'alimentation	F.D Extraction lavage	Activité de la phase aqueuse sortante du 1er Cycle U + Pu = 48 g.l^{-1} (m Ci.l^{-1})			F.D 1er Cycle						Activité de la phase aqueuse sortant du 2ème Cycle U + Pu = 44 g.l^{-1} (m Ci.l^{-1})			F.D 2ème Cycle				F.D 1er + 2ème Cycle				Observations
			Zr	Nb	Ru	Σγ						Zr	Nb	Ru	Cs	Ce	Σγ	Nb	Ru	Σγ	Zr	Nb	Ru	Σγ	Zr	Nb	Ru	Σγ	
1 (13h.)	$UO_2.PuO_2$ (11 %) irradiés dans EL 3 jusqu'à 19000 MWJT^{-1}	1 an				38	$[HF] = 1,510^{-2}$ M dans la charge	/	/			32 000		8000	410^{4}	410^{4}	18 000												
2 (50h)	$UO_2.PuO_2$ (25 %) irradiés dans EL 3 20000 MWJT^{-1}	60 jours	100	10	40	317	$[HF] = 0$	/	/			280	140	5000		15000	de 100 à 700												Précipités d'interphases
3 (100h)	$UO_2.PuO_2$ (25 %) irradiés dans EL 3 15000 MWJT^{-1}	45 jours	60		60	245	$[HF] = 10^{-2}$ M. dans la charge $= 510^{-3}$ M dans le lavage	5 500	Nb 5	Ru 1,3	Σγ 7	8 500		30000	$>10^{4}$	$>10^{4}$	20 000	Nb 0,140	Ru 0,260	Σγ 0,400	160		12	150	$1,410^{6}$		310^{5}	310^{6}	
4 (70h)	Eléments Rapsodie irradiés jusqu'à 13000 MWJT^{-1}	45 jours	100		60	192	$[HF] = 210^{-2}$ M dans la charge et le lavage	1000	2	0,5	2,5	10^{5}	210^{4}	10^{5}	$>10^{4}$	$>10^{4}$	50000	0,020	0,050	0,080	/	200	50	>200	$>10^{8}$	410^{6}	510^{6}	$>10^{7}$	Fuites de Pu dues à un excès de fluor
5 (70h)	Eléments Rapsodie irradiés jusqu'à 20000 MWJT^{-1}	40 jours	100	30	80	610 ≃8 W.l^{-1}	$[HF] = 10^{-2}$ M $[Al] = 310^{-2}$ M dans la charge et le lavage	10 000	14	1,5	15	63000	3800	83000	$>10^{5}$	$>10^{6}$	60000	0,007	0,009	0,022	/	1800	200	700	10^{7}	710^{6}	$1,410^{7}$	410^{7}	
6 (70h)	Eléments Rapsodie irradiés jusqu'à 20 ou 40000 MWJT^{-1}	120 J	70	30	65	420 ≃5 W.l^{-1}	$[HF] = 10^{-2}$ M $[Al] = 310^{-2}$ M dans la charge et le lavage (lavage 4 N)	6 000	5	1,2	7	10^{5}	4000	40000	$>10^{5}$	$>10^{4}$	40 000	/	/	0,350	/		/	200	$>10^{7}$	$>10^{6}$	$>10^{6}$	810^{6}	

Tableau I ..Caractéristiques des éléments traités et performances obtenues en décontamination au cours des divers essais dans la cellule " CYRANO "

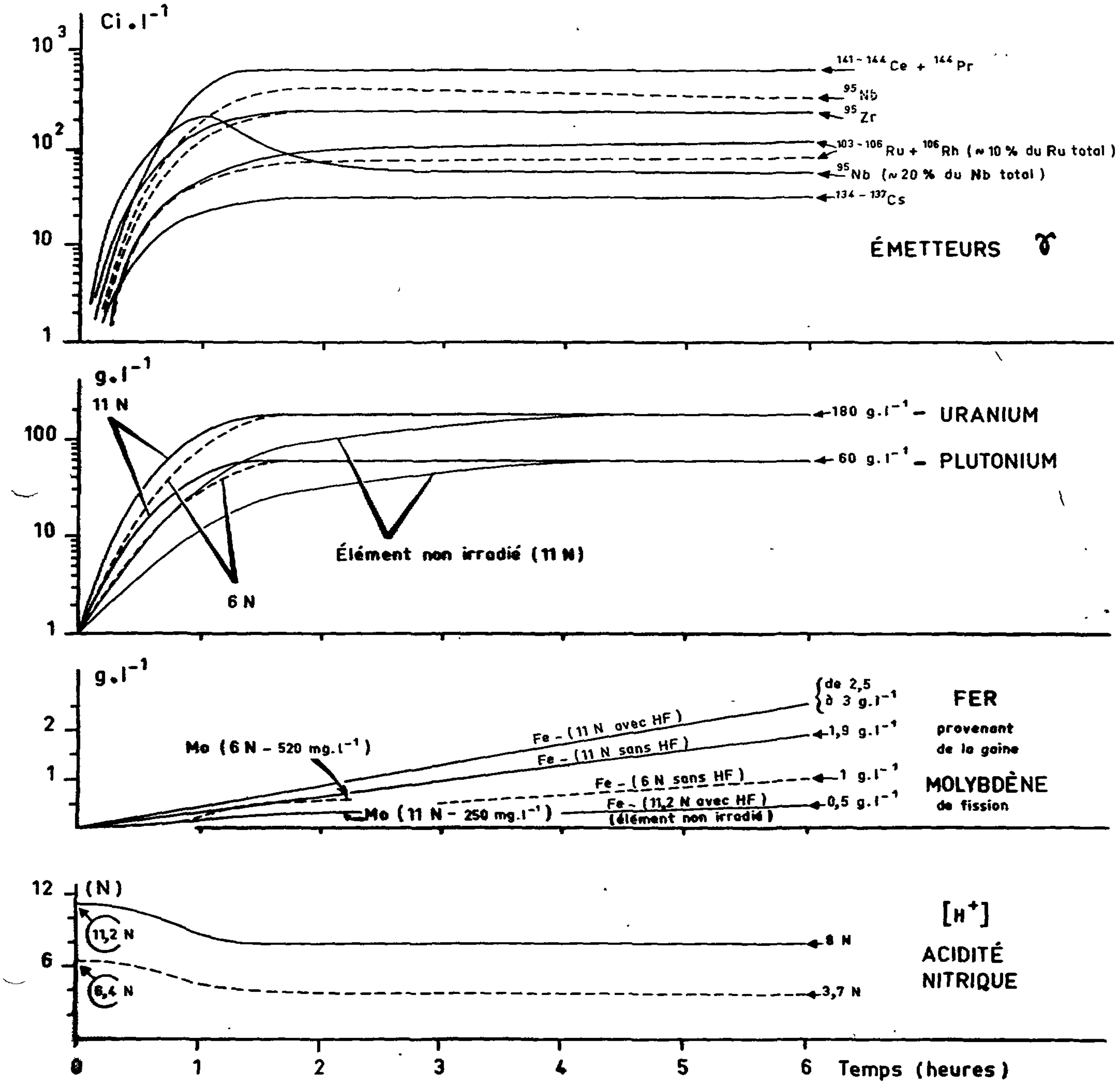

Fig. 1.– Dissolution des aiguilles Rapsodie irradiées jusqu'à 40000 MWJT^{-1} en milieu nitrique (6 N) et (11 N + HF = 3,5 10^{-2} M, $\frac{Al}{F}$ = 1).

— Refroidissement 120 jours —

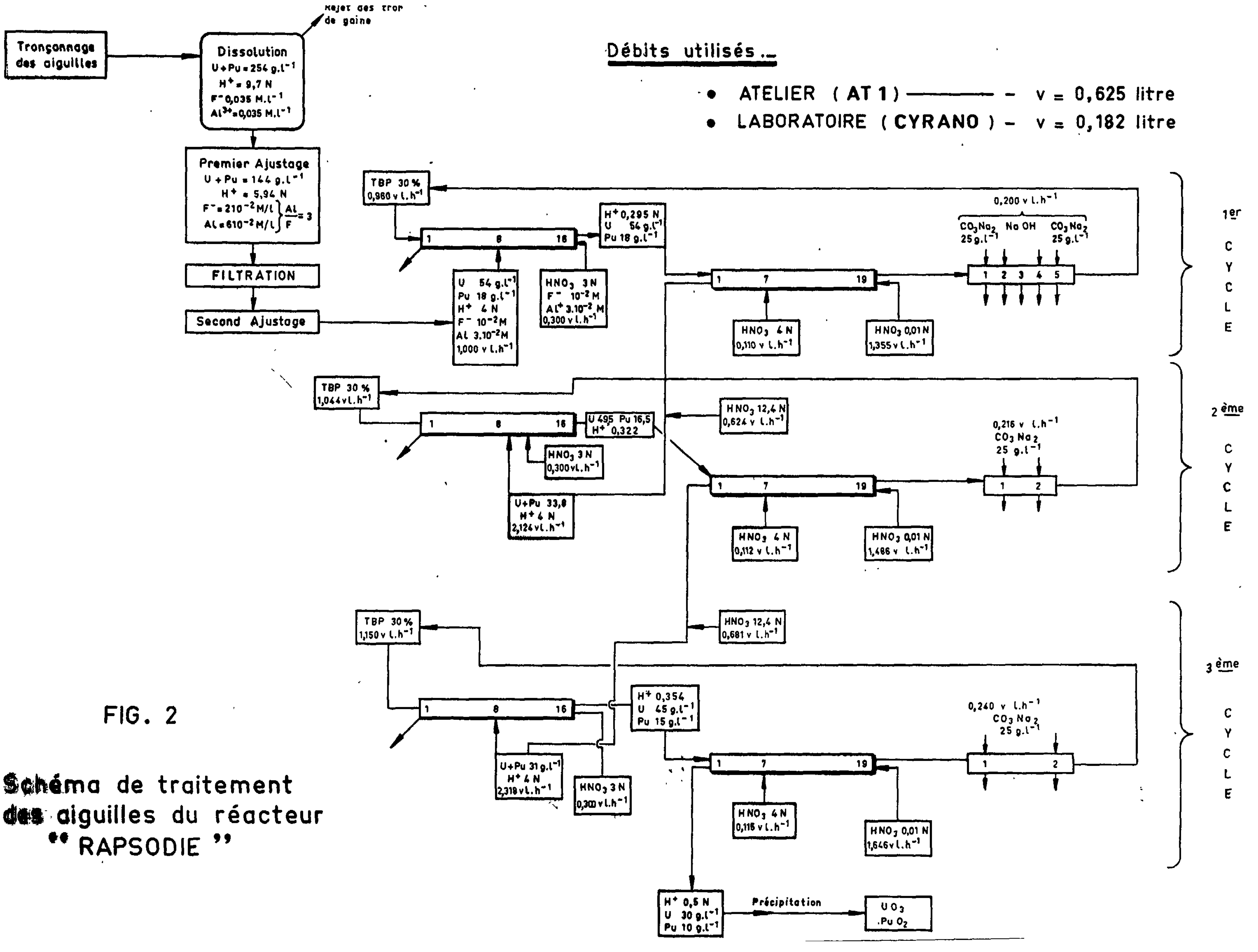

Débits utilisés.

- ATELIER (AT 1) ——— - v = 0,625 litre
- LABORATOIRE (CYRANO) - v = 0,182 litre

FIG. 2

Schéma de traitement des aiguilles du réacteur "RAPSODIE"

APPAREILLAGES POUR LE TRAITEMENT DES COMBUSTIBLES FORTEMENT IRRADIES

Pierre MICHEL
et
Jacques DOLLFUS (Saint-Gobain Techniques Nouvelles)

COMMISSARIAT A L'ENERGIE ATOMIQUE
Direction des Matériaux et Combustibles Nucléaires
Département de Chimie
Services de Chimie des Com diés
Service de Génie Chimi

ABSTRACT

Highly irradiated oxide-base fuels present new problems for chemical treatment in view of their nature and high specific activity.

The presence of cladding which is insoluble in nitric acid complicates the initial treatment and, in particular, continuous dissolving. Continuous dissolving apparatus is at present being designed at the Fontenay-aux-Roses Centre.

The very high specific activity of the solutions being purified interferes with the solvents used. This difficulty can be overcome with the use of extracting agents with a short contact-time.

Unlike decanter mixers and pulsed columns, centrifugal extractors seem capable of meeting the conflicting requirements for a short residence-time and high output.

Independently of the industrial extractors and the nuclear apparatus developed abroad, the CEA and French industry are engaged in designing an original type of centrifugal extractor. An eight-stage model has been tested over a long period for the extraction of pure uranium. The tests have confirmed the advantages of this apparatus, which has an extraction efficiency higher than 99.99% and phase entrainments lower than 0.5‰. Its efficiency in the extraction of plutonium and fission product decontamination will be verified by tests on active solutions which are being conducted at the Marcoule pilot plant.

RESUME

Les combustibles à base d'oxydes qui ont subi de hauts niveaux d'irradiation posent des problèmes nouveaux pour leur traitement chimique, par leur nature et par leur forte activité spécifique.

La présence de gaines insolubles dans l'acide nitrique complique le traitement initial et en particulier la continuité de la dissolution. Des appareils de dissolution continue sont en cours d'études au Centre de Fontenay-aux-Roses.

L'activité spécifique très forte des solutions à purifier est une menace pour les solvants utilisés. Cette difficulté peut être surmontée par l'emploi d'extracteurs à court temps de contact.

A l'encontre des mélangeurs-décanteurs et des colonnes pulsées, les extracteurs centrifuges semblent pouvoir concilier les impératifs de court temps de séjour et de débit élevé.

Indépendamment des extracteurs industriels et des appareils à usage nucléaire mis au point à l'étranger, le CEA et l'industrie française étudient un extracteur centrifuge original. Un modèle à huit étages a été longuement essayé pour l'extraction de l'uranium pur. Les essais ont confirmé la valeur de cet appareil dont l'efficacité en extraction est supérieure à 99,99 % et les entraînements de phases inférieurs à 0,5 o/oo. Des essais sur solutions actives à l'atelier pilote de Marcoule permettront de vérifier son efficacité pour l'extraction du plutonium et la décontamination en produits de fission.

I - INTRODUCTION

Pour le traitement chimique après irradiation des combustibles des réacteurs à eau (légère ou lourde) et des surgénérateurs à neutrons rapides, il est logique d'envisager le procédé classique aux solvants. En fait, on constate qu'à toutes les étapes de ce procédé se posent de nouveaux problèmes qui ont pour origines principales la nature et la constitution des combustibles et surtout leur taux d'irradiation élevé.

II - PROBLEMES POSES PAR LA NATURE DES COMBUSTIBLES

Tous ces combustibles sont constitués d'oxydes denses (frittés ou compactés) gainés de matériaux assez réfractaires (acier inoxydable ou zircaloy). Ils se présentent sous la forme de faisceaux d'aiguilles longues (jusqu'à 4 m) et de faible diamètre (6 à 20 mm). Il semble donc exclu de séparer mécaniquement la gaine et le combustible en vue de la première étape : la mise en solution.

Le procédé le plus fréquemment proposé est le "découpage-dissolution" (chop-leach process) qui consiste à couper les aiguilles en petits tronçons (individuellement ou par faisceaux) que l'on met dans un panier amovible à l'intérieur du dissolveur. Seul l'oxyde est dissous, les morceaux de gaines étant tout au plus corrodés et pouvant être retirés en fin d'opération au moyen du panier. Ce procédé est discontinu. Il est appliqué à l'usine de West Valley de NFS [1]. Plusieurs moyens pour rendre continue ou quasi-continue cette étape sont à l'étude en France.

1. DISSOLVEUR "SEMI-CONTINU"

C'est l'application au système discontinu évoqué ci-dessus d'un appareil déjà breveté en 1963 [2]. Le principe est le suivant (fig. 1) :

Les dissolveurs sont deux récipients tubulaires. Ils contiennent chacun un panier amovible et sont reliés à un réservoir commun, par débordement d'une part, par un tube de circulation d'autre part. La circulation est assurée par une chaudière qui engendre de la vapeur au sein de la solution, l'ensemble fonctionnant comme un "air lift". Un dévésiculeur sépare vapeur et solution, cette dernière retombant dans le dissolveur qui est par ailleurs alimenté régulièrement en tronçons d'aiguilles et en continu en réactif (acide nitrique en général). La solution résultante sort en continu. Pour assurer en permanence l'opération de dissolution, un seul tube dissolveur est en service. L'enchaînement des diverses phases est résumé sur le tableau I.

Phase	Dissolveur 1	Dissolveur 2
1	La solution circule. Alimentation en combustible et en réactif	Panier vide disponible
2	Le panier est plein. Arrêt des alimentations	Mise en route des alimentations et de la circulation
3	Combustible dissous. Arrêt de la circulation. Vidange de la solution vers le réservoir. Début du rinçage des gaines par le réactif.	L'alimentation et la circulation continuent
4	Vidange de la solution de rinçage vers le réservoir. Sortie et vidange du panier (Tronçons de gaine) après égouttage. Remise en place du panier vide.	
5		Le panier est plein. Même enchainement en intervertissant 1 et 2.

Tableau I - ENCHAINEMENT DES PHASES DE DISSOLUTION

Comme on le voit, il faut soigneusement programmer les phases. L'intérêt du système de circulation est de permettre l'isolement du dissolveur quand on arrête la chaudière. Diverses solutions sont par ailleurs envisageables pour répondre aux problèmes de vidange des solutions présentes dans les dissolveurs et des tronçons de gaines contenues dans les paniers.

Un prototype non actif d'un appareil de ce principe est actuellement construit à Fontenay et sera expérimenté au cours du second semestre 1969. Il utilise notamment un panier du même modèle que celui prévu pour un dissolveur conçu et breveté par Saint Gobain Techniques Nouvelles [3] (cet appareil fonctionne en thermosiphon avec 2 cuves de dissolution et une cuve de rinçage). En ce qui concerne le panier, l'évacuation des morceaux de gaines y est réalisée au moyen d'une trappe latérale dont l'ouverture est automatiquement obtenue par une action mécanique simple en fin de montée du panier. L'inconvénient de cet ensemble réside en la complexité de l'enchaînement des phases et le risque de fragilité des mécanismes de sortie de panier qu'il a d'ailleurs hérité des dissolveurs par charges. Peut-on l'éviter ? L'idéal serait bien sûr un appareil rejetant en continu les résidus insolubles.

2. DISSOLVEUR CONTINU

Diverses possibilités ont déjà été examinées ou expérimentées surtout à Oak Ridge :

- Appareil à vis d'Archimède [4]
- Appareil à spirale vibrante [5]
- Appareil à roue, rappelant le principe de la noria [6].

Cette dernière solution, présentée d'ailleurs dans une version par "charges" a retenu l'attention et fait l'objet d'une étude en vue de la construction d'un prototype qui, dans ses grandes lignes, se présentera comme suit (Fig. 2) :

Un réservoir plat (pour des raisons de sécurité nucléaire) contient une roue portée par un arbre moteur. Des plaques perforées non radiales reçoivent les tronçons d'aiguilles et après rotation permettent d'évacuer les morceaux de gaine. La vitesse de rotation doit être calculée pour laisser un temps suffisant à la dissolution. La rotation peut d'ailleurs n'être pas continue.

Pour réaliser cet appareil certains problèmes géométriques et mécanique doivent être résolus. Pour ces derniers il convient de noter qu'ils sont en définitive plus simples que pour les appareils à panier amovible, puisqu'il s'agit surtout de mettre au point des paliers inoxydables et étanches pour un axe tournant à faible vitesse.

3. AUTRES SOLUTIONS

Il a été dit qu'un dégainage mécanique était pratiquement exclu. Pourtant les chercheurs n'ont pas renoncé à tout moyen de séparer gaine et combustible. Aux USA est étudié un procédé qui consiste, après tronçonnage, à griller à l'oxygène l'oxyde combustible [7]. Par ce moyen, on pourrait en outre éliminer la majorité de l'iode et une partie des produits de fission donnant des oxydes volatils (Ru, Cs).

A Fontenay on cherche à mettre au point une séparation par un broyage des tronçons d'aiguilles suivi d'un simple tamisage [8]. Expérimenté avec succès sur des aiguilles non irradiées, ce procédé doit être vérifié sur des échantillons irradiés fortement.

III - PROBLEMES POSES PAR LE TAUX D'IRRADIATION

L'emploi généralisé de l'extraction par solvant pour séparer uranium et plutonium des produits de fission a permis de résoudre convenablement ce problème du traitement chimique. Toutefois l'augmentation continue du taux de combustion et la réduction souhaitée de la durée de désactivation des combustibles conduit à un dégagement d'énergie élevé, sous forme de radioactivité, dans les solutions à traiter, et aussi à une teneur importante en éléments de fission, notamment de zirconium. Le dégagement d'énergie et la teneur en zirconium sont les deux facteurs connus principaux de la dégradation du solvant, elle-même responsable de mauvais facteurs de décontamination et de la rétention de matière fissile dans le solvant.

Les appareils les plus couramment utilisés pour cette opération sont les mélangeurs-décanteurs, dont l'inconvénient principal est de ménager aux deux phases des temps de séjour, et donc des temps de contact, longs. Ce fait favorise la dégradation radiolytique (énergie absorbée importante) et la dégradation chimique, notamment par le zirconium extrait, dont la réaction sur le TBP est assez lente au départ. Il est donc d'un intérêt évident de disposer d'appareils réduisant considérablement temps de séjour et temps de contact des deux phases, indépendamment des moyens physico-chimiques étudiés par ailleurs pour supprimer l'extraction du zirconium.

1. REVUE DES APPAREILS EXISTANTS

Il n'est pas question ici d'insister sur les mélangeurs-décanteurs qui sont surtout utilisés pour le traitement de solutions relativement peu radioactives. Leur avantage principal est de ne pas limiter les débits de phase. En revanche ils favorisent la dégradation du solvant, phénomène déjà sensible avec des solutions de combustibles peu irradiés.

Les colonnes pulsées sont nettement plus favorables à cet égard. Elles sont utilisées d'ailleurs à NFS [1] et EUROCHEMIC. Des études ont été effectuées sur le taux de rétention des phases à l'atelier pilote de Marcoule [9]. Le calcul montre ainsi que le temps de séjour du solvant dans la colonne d'extraction est de l'ordre de 15 minutes contre 3 à 4 fois plus dans une batterie de mélangeurs-décanteurs équivalente, ce qui constitue un progrès important dans la lutte contre la dégradation du solvant.

Un deuxième avantage est l'existence d'une seule interface solvant - phase aqueuse. Les précipités (dibutylphosphate, monobutylphosphate et phosphate de zirconium) qui contribuent largement à la dégradation du solvant, n'existent donc qu'en un seul point de l'appareil. Si en outre la colonne fonctionne en phase organique continue, l'interface sera en bas et ce précipité pourra être soutiré avec la phase aqueuse /10/. On peut reprocher cependant aux colonnes pulsées les difficultés qu'elles amènent pour garder une efficacité acceptable quand leur diamètre dépasse 300 mm qui ne permet qu'un débit total pratique de 1500 $l.h^{-1}$ insuffisant pour les grosses capacités; ensuite le temps de séjour des phases, bien que réduit, ne paraît pas assez faible pour supprimer la précipitation du zirconium avec les produits de dégradation. On est donc amené à rechercher des appareils à temps de séjour encore plus court. Pour cela il faut pouvoir réduire le temps de décantation et on est conduit à utiliser des champs centrifuges.

Des extracteurs centrifuges non spécifiquement nucléaires existent depuis plusieurs années :

- Podbielnak /11/ et une variante améliorée Quadronic /12/. Ils nécessitent 4 joints tournants dont au moins 2 sous pression, ce qui est un inconvénient notable.

- Luwesta /11/ : Ces appareils ont des étages individualisés mais la multiplicité des passages dans le fût central imposent un nombre d'étages maximal de 3 par appareil.

Ces extracteurs ne semblent pas avoir tenté les chercheurs dans le domaine radioactif. Ils ont plutôt cherché à mettre au point des appareils répondant plus spécifiquement à leurs problèmes.

A Savannah River /13/, un modèle conçu à partir du principe des mélangeurs-décanteurs a été expérimenté avec succès même en actif. Le décanteur est centrifuge et actionné par le même moteur que la turbine. Il ne semble poser aucun problème d'extrapolation pour les gros débits et paraît très bien adapté au traitement de solutions d'activité spécifique moyenne. A sa charge on peut toutefois relever :

- La difficulté de le rendre nucléairement sûr
- Un ensemble mécanique par étage
- La nécessité d'un réglage d'interface par air comprimé par étage
- L'encombrement relativement important
- La complexité des liaisons entre étages.

A Oak-Ridge /14/, un extracteur centrifuge basé sur les séparateurs cyclones est à l'étude depuis longtemps. Il présente de nombreux défauts, notamment une mauvaise efficacité d'étage, la nécessité d'une pompe par étage, une mauvaise séparation des phases et une grande difficulté d'extrapolation à partir d'un modèle au point.

De tous ces appareils, seul l'extracteur de Savannah a fait ses preuves, d'ailleurs en présence d'activités spécifiques moyennes. Aucun n'a paru vraiment satisfaisant pour les solutions dont, à la fois, la concentration en matières fissiles et l'activité spécifique sont élevées. Aussi a-t-on été conduit à entreprendre l'étude poussée de l'appareil Dollfus Robatel, dont l'intérêt principal réside en ses grandes possibilités de débit pour un volume total très compact.

2. EXTRACTEUR CENTRIFUGE DOLLFUS ROBATEL /15//16/

2.1. Description et théorie.

Cet extracteur fonctionne selon le principe suivant (fig. 3 et 4). Il est constitué d'un bol tournant divisé en plusieurs chambres et d'un fût cylindrique fixe porteur de disques, dont le rôle est d'assurer par freinage la circulation des phases et par frottement leur mélange. Les déversoirs circulaires des phases dans les compartiments de décantation sont fixes et calculés "a priori" pour un certain domaine de rapports de densité /17/.

Deux appareils de ce type ont été expérimentés à Fontenay et plus particulièrement un petit modèle permettant d'utiliser des débits de 30 à 75 $l.h^{-1}$. Le bol avait un diamètre de 160 mm et comprenait 8 étages. Sa vitesse de rotation pouvait atteindre 5000 $t.min^{-1}$ donnant ainsi une accélération maximale de 2200 $\bar{g}$ à la périphérie.

Que peut-on attendre d'un tel appareil en ce qui concerne les temps de séjour ? Dollfus /18/ a démontré que pour 2 appareils de débits égaux et imprimant aux phases des accélérations γ et γ', les temps de séjour t et t' répondent à la relation

$$\frac{t'}{t} = \left(\frac{\gamma}{\gamma'}\right)^{\frac{6}{11}}$$

Si $\gamma = \bar{g}$ (cas du mélangeur-décanteur) et $\gamma' = 500\ \bar{g}$ (extracteur centrifuge)

$$\frac{t'}{t} = \left(\frac{1}{500}\right)^{\frac{6}{11}} = \frac{1}{30}$$

Autrement dit le temps dé séjour serait divisé par 30 et l'énergie absorbée par le solvant serait réduite dans le même rapport.

2.2. Essais effectués.

Les essais réalisés avec le modèle décrit ci-dessus ont été particulièrement riches en enseignements, en ce sens que la petite taille de cet appareil a entraîné une amplification des phénomènes parasites. Toutes les difficultés ainsi mises en évidence ont pu être surmontées. Les principaux résultats obtenus avec des phases aqueuses nitriques et du TBP à 30 % dans le dodécane sont exposés ci-après.

Fonctionnement hydraulique :

Après des résultats décevants (entraînements de phase aqueuse dans la phase organique de 5 o/oo à 2 % selon les régimes), les disques agitateurs ont été munis d'un dispositif anti-projection (une simple arête verticale circulaire).
Les conséquences ont été très bonnes (Fig. 5 et 6). On peut tirer des résultats les conclusions suivantes :

- On peut toujours trouver un domaine de vitesses de rotation où les entraînements sont négligeables ($< 0,5$ o/oo).

- Il n'y a jamais d'entraînement de phase organique dans la phase aqueuse.

Essais d'extraction et réextraction d'uranium :

Les premiers essais ont montré que l'appareil devait être efficace mais il était difficile d'éviter une teneur dans le raffinat de 10 à 65 $mg.l^{-1}$ d'uranium dans les cas où la solution aqueuse d'alimentation était très concentrée (400 $g.l^{-1}$) (Tableau 2). Après divers tâtonnements, il s'est avéré que l'empilage des étages emboîtés les uns dans les autres n'était pas assez étanche et que la teneur relativement élevée du raffinat était due à sa pollution par de légères fuites de phase aqueuse riche provenant des étages les plus proches de l'alimentation. On a donc muni chaque étage d'un joint plat mince (0,05 à 0,2 mm), assurant ainsi une assez bonne étanchéité. La teneur en uranium du raffinat est alors devenue très inférieure à 1 $mg.l^{-1}$. (Tableau 3).

Les conclusions que l'on peut tirer de ces essais sont les suivantes :

- L'efficacité de l'appareil en extraction croît avec le débit total et décroît quand la vitesse de rotation croît. En réextraction, elle croît avec le débit et la vitesse de rotation.

- En extraction l'essai 1 montre que l'appareil possède un nombre d'étages théoriques supérieur à 7.

Pour les autres essais il est difficile de parler d'étages théoriques car les possibilités analytiques ne permettent pas d'en déceler plus de 4. En outre on sait que la teneur en uranium du raffinat est due à une pollution. Il est donc préférable de parler de ce qu'on sait mesurer, c'est-à-dire du rendement d'extraction. On voit qu'il est supérieur à 99,999 % quand les conditions de fonctionnement sont bien choisies.

- En réextraction on obtient environ 6 étages théoriques, ce qui est honorable si, comme certains résultats semblent le prouver, l'appareil fonctionne en phase organique continue.

- Le problème de l'étanchéité du bol peut être résolu par une bonne finition de l'usinage des étages et la recherche des formes d'emboîtement appropriées. En outre un calcul simple montre que le risque de pollution doit être plus faible pour un gros appareil. La fuite est à peu près proportionnelle au périmètre du bol et la dilution de la fuite proportionnelle au débit de phase aqueuse. (La concentration du raffinat est donc inversement proportionnelle à ce même débit).

Soit deux appareils de diamètres D et D', de débit aqueux A et A' et x et x' les concentrations dans le raffinat. On écrit, à champ centrifuge égal

$$x = K \frac{D}{A} \qquad x' = K \frac{D'}{A'} \qquad x' = x \frac{D'}{D} \frac{A}{A'}$$

Pour l'appareil étudié on a $D = 160$ mm A 10 $l.h^{-1}$

Pour un gros appareil (en construction) on aura

$$D = 670 \text{ mm} \quad A = 600 \ l.h^{-1} \quad x' = x \ \frac{670}{160} \cdot \frac{10}{600} \simeq 0,07 \ x.$$

Cette fuite serait divisée par 14 environ. Ce point notamment pourra être vérifié sur un ensemble d'extracteurs industriels de grande capacité en cours de montage au centre du Bouchet, qui fonctionnera aussi avec de l'uranium naturel non irradié.

L'appareil décrit ici est actuellement en cours de montage à l'Atelier Pilote de Marcoule où il sera essayé au premier cycle d'extraction. Son efficacité pour l'extraction du plutonium et pour la décontamination vis à vis des produits de fission pourra être ainsi vérifiée dans des conditions industrielles.

Un autre appareil semblable doit être essayé pour la partition uranium-plutonium.

IV - AUTRES PROBLEMES

Avec les combustibles de la filière rapide, le débit de plutonium sera élevé. Pour les opérations ultimes, en particulier la précipitation de l'oxalate de plutonium, il est important de pouvoir disposer d'appareils continus de grande capacité.

Le précipitateur continu [19] utilisé à l'usine de La Hague a été extrapolé jusqu'au diamètre nucléairement sûr de 150 mm et expérimenté avec de l'uranium tétravalent. Les résultats s'accordent assez bien avec les calculs d'extrapolation.

- La capacité qu'on peut atteindre croît avec la concentration en plutonium de la solution d'alimentation :

600 à 800 $g.h^{-1}$	de Pu	pour	20 $g.l^{-1}$
800 à 1000 $g.h^{-1}$	"	-	25 $g.l^{-1}$
1200 à 1500 $g.h^{-1}$	"	-	50 $g.l^{-1}$
1800 $g.h^{-1}$	"	-	100 $g.l^{-1}$

- Les entraînements de fines par les eaux-mères représentent moins de 0,5 % du plutonium, pourvu que la vitesse ascensionnelle des eaux-mères soit inférieure à 3 $m.h^{-1}$ environ. On peut le régler en agissant sur le débit de lavage.

Le lavage dans le précipitateur devenant faible pour ces débits, il paraît indispensable de le compenser par une filtration avec lavage sur filtre. Aussi plusieurs modèles de filtres continus sont-ils expérimentés actuellement.

V - CONCLUSIONS

L'effort important exigé par les problèmes nouveaux des combustibles très irradiés commence à donner des résultats intéressants. Il semble que beaucoup de ces difficultés puissent être surmontées par des créations ou des améliorations technologiques, notamment l'élimination continue des gaines après dissolution du combustible et surtout le maintien de facteurs de décontamination élevés par la réduction des temps de séjour dans les extracteurs.

REMERCIEMENTS

Les travaux dont il est fait mention dans cette communication sont réalisés grâce à la collaboration de

M. TARNERO pour les dissolveurs et l'extracteur centrifuge,

J.P. GOUMONDY et J. LE BOUHELLEC pour les colonnes pulsées,

J.C. BESSON pour la précipitation continue.

VI - BIBLIOGRAPHIE

[1] R.P. WOSCHOW, J.R. CLARK
Safeguards procedures manual for the NFS reprocessing plant.
Vol. II - Plant description
Rapport américain TID 23991 (Vol. 2) 1966

[2] P. FAUGERAS, P. MICHEL, X. TALMONT
Appareil de dissolution de matériaux nucléaires
Brevet Français PV 942.246 du 22.7.63 1963

[3] J. MAMELLE, P. REGNAUT
Traitement par voie aqueuse des Combustibles irradiés. Perfectionnements techniques envisagés.
Communication SM 105/14 à la Conférence
Economics of nuclear fuels, Gottwaldow 1968

[4] C.D. WATSON, B.C. FINNEY
Unit operations section - Monthly progress report (Sept. 61)
Rapport américain ORNL TM 112 p. 27 1962

[5] G.A. WEST, F.G. KITTS, C.D. WATSON
Power reactor fuel processing status report for July 1956.
Rapport américain CF 56.7.101 1957

[6] C.V. CHESTER, F.G. KITTS, G.A. WEST
Mechanical processing and nitric acid leaching
Rapport américain ORNL 2265 1957

[7] G.E. BRAND, E.W. MURBACH
Pyrochemical reprocessing of UO_2 by AIROX
Rapport américain NAA - SR. 11.389 1965

[8] G. MANEVY, G. MATCHERET
Traitement des oxydes mixtes UO_2-PuO_2 gainés d'acier inoxydable
Rapport semestriel du Département de Chimie - Juin-Nov. 67 - CEA - N 969, p. 305-307 1968

[9] J. LE BOUHELLEC, J.J. FABRE
Etude de fonctionnement des colonnes pulsées
R.S. D.C. Déc. 66 - Mai 67
CEA - N 856, p. 258-262 1967

[10] P. MICHEL
Etudes sur le traitement des combustibles à base d'alliages contenant de l'uranium très enrichi
BIST n° 127 p. 61-73 1968

[11] R.E. TREYBAL
Liquid Extraction. p. 531. Mac Graw Hill 1962

[12] C.M. DOYLE et al.
Centrifugal type contactors
Revue américaine Chemical Engineering progress
Vol. 64, n° 12, p. 68-74 1968

[13] D.S. WEBSTER et al.
Performance of a centrifugal mixer-settler in the reprocessing of nuclear fuel
Rapport américain DP.MS. 67-71 1967

[14] W.S. GROENIER, M.E. WHATLEY
The stacked-clone Contactor : A high performance hydroclone solvent extraction device
Rapport américain ORNL 4267 1968

[15] P. MICHEL, M. TARNERO
Essais d'extracteurs centrifuges
R.S. D.C. Juin-Nov. CEA-N-969 p. 189-193 1968

[16] J. DOLLFUS, M. TARNERO
Le transfert de matière dans les appareils d'extraction centrifuges multiétages
Revue française Chimie et Industrie - Génie Chimique, Vol. 99, n° 11, p. 1595-1602 1968

[17] S.G.N. - J. DOLLFUS
Brevet français PV 929-858 du 29/3/63 1963

[18] J. DOLLFUS
A new type of pluristage centrifugal extractor
Communication à la Solvent Extraction Conference
Imperial College - Londres 1967

[19] J.C. BESSON, P. FAUGERAS, T. KIKINDAI, X. TALMONT
Appareil de précipitation en continu
Brevet français n° 1407.233 du 21/6/65 1965

Tableau II - ESSAIS DE L'EXTRACTEUR CENTRIFUGE SGN-ROBATEL

	1. Extraction de l'uranium par du TBP à 30 %								
Essai n°	Phase d'alimentation Concentrations		Débits			Vitesse de rotation t.min^{-1}	Pertes en U dans la phase épuisée		Etages théoriques
	U g.l^{-1}	HNO$_3$ N	A l.h^{-1}	O l.h^{-1}	$\frac{O}{A}$		mg.l^{-1}	ppm	
1	35	0,5	22	13	0,6	1500	170		7,9
						2500	220		7
2	90	2	17,5	17,5	1	1500	2	22	
			17,5	17,5	1	2500	0,7	8	
			17,5	17,5	1	4000	51	566	
			37,5	37,5	1	1500	0,1	1	
			37,5	37,5	1	2500	0,3	3	
3	180	2	12	23	2	1500	0,6	3	
			12	23	2	2500	2,4	13	
			15	30	2	1500	0,2	1	
			15	30	2	2500	0,5	3	
4	400	2	7	31	4,4	1500	10-30	25-75	
			7	31	4,4	2500	40-65	100-160	
			9	40	4,4	1500	12	30	
			9	40	4,4	2500	24	60	
5	400 avec joints d'étanchéité	2	7	31	4,4	1500	0,2	0,5	
						2500	0,2-0,4	0,5-1	
						4000	22	55	
	2. Réextraction par l'acide nitrique 0,01 N								
6	70	0,2	20,6	14,4	0,7	2000	17	243	5,7
			20,6	14,4		4000	29	413	5,4
7	82	0,3	32,3	22,7	0,7	3000	16	195	6
			32,3	22,7	0,7	4000	17	207	6
			32,3	22,7	0,7	5000	3	36	6,3
			43	30	0,7	4000	5,8	70	6
			43	30	0,7	5000	3,5	43	6,1

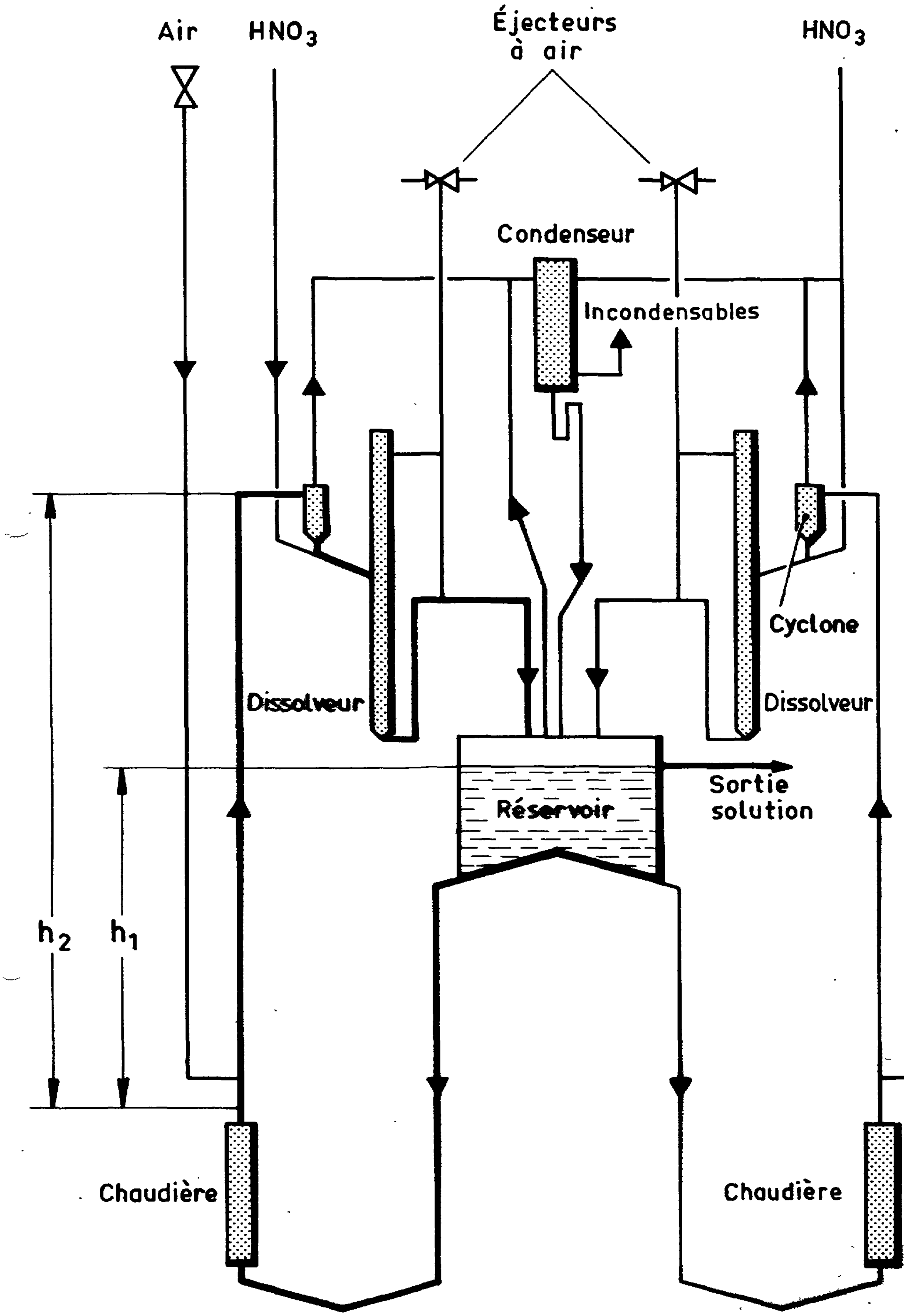

Fig. 1 _ Principe du dissolveur semi - continu

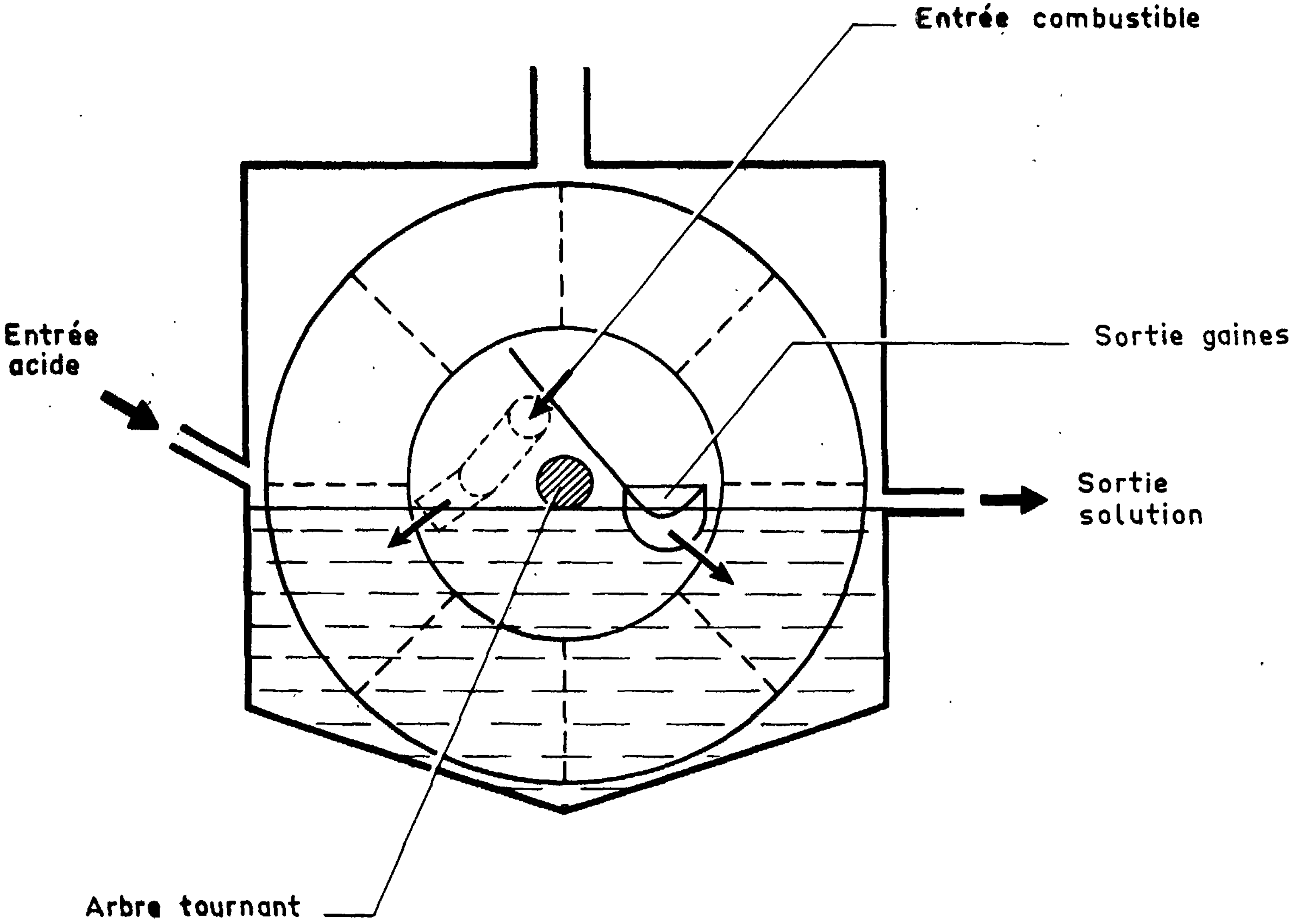

Fig. 2 ._ Dissolveur continu - Principe .

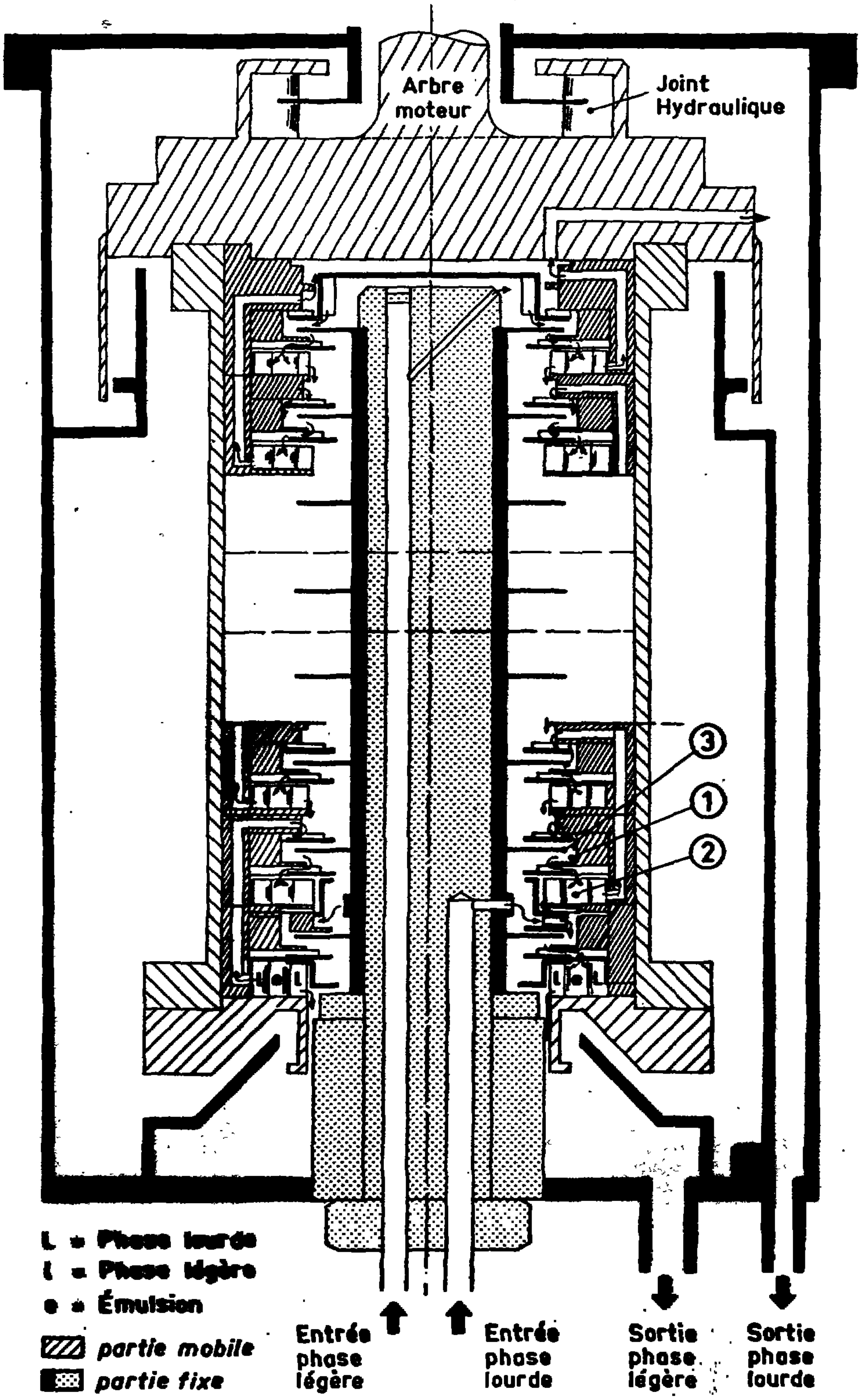

_ Gorge de mélange. 2_ Gorge de décantation. 3_ Disque agitateur.

FIG. 3_ EXTRACTEUR CENTRIFUGE 8 ÉTAGES
([illegible])

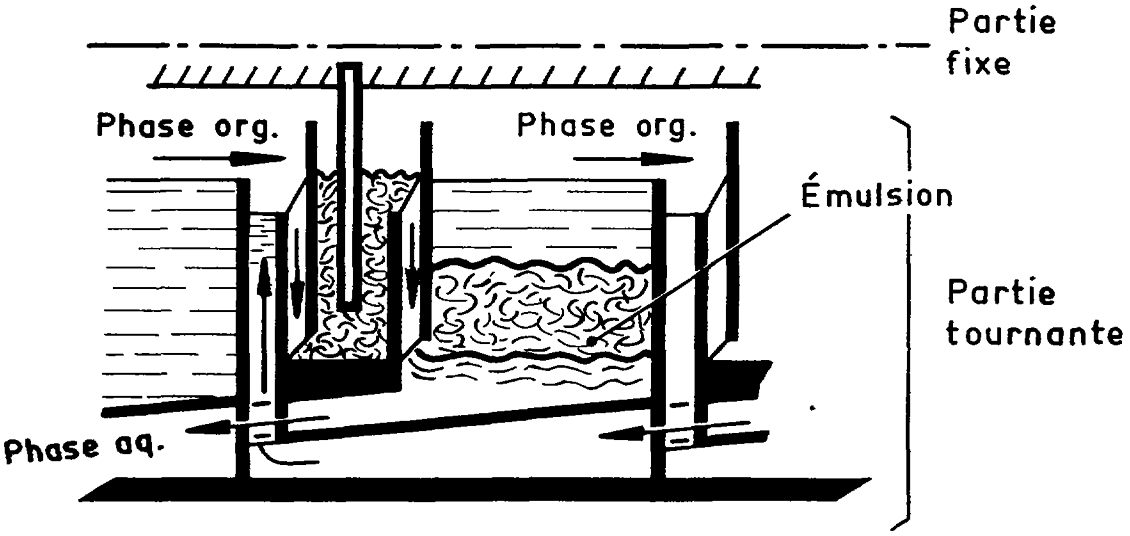

Fig. 4 _Principe du fonctionnement d'un étage .

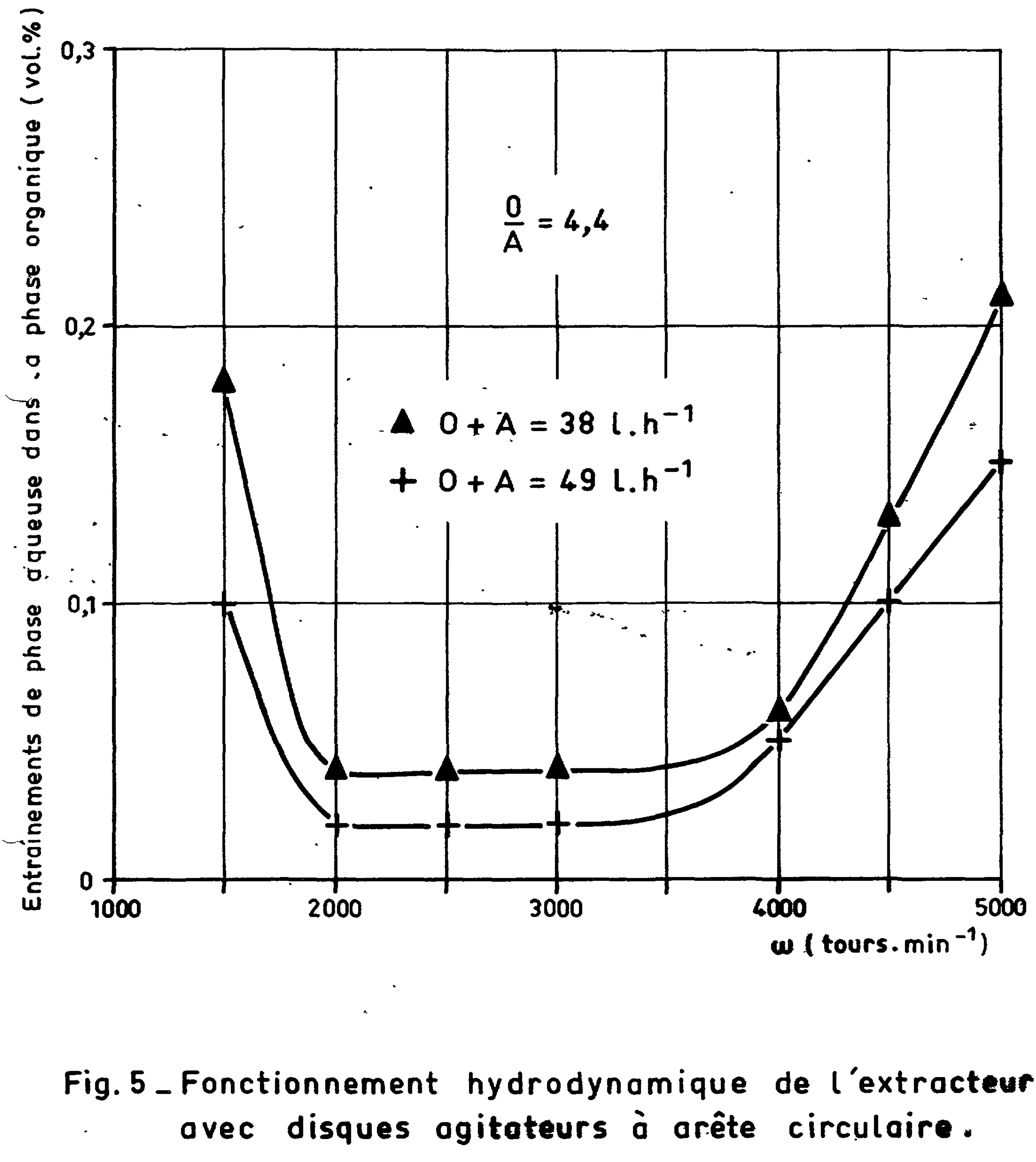

Fig. 5 _ Fonctionnement hydrodynamique de l'extracteur avec disques agitateurs à arête circulaire.

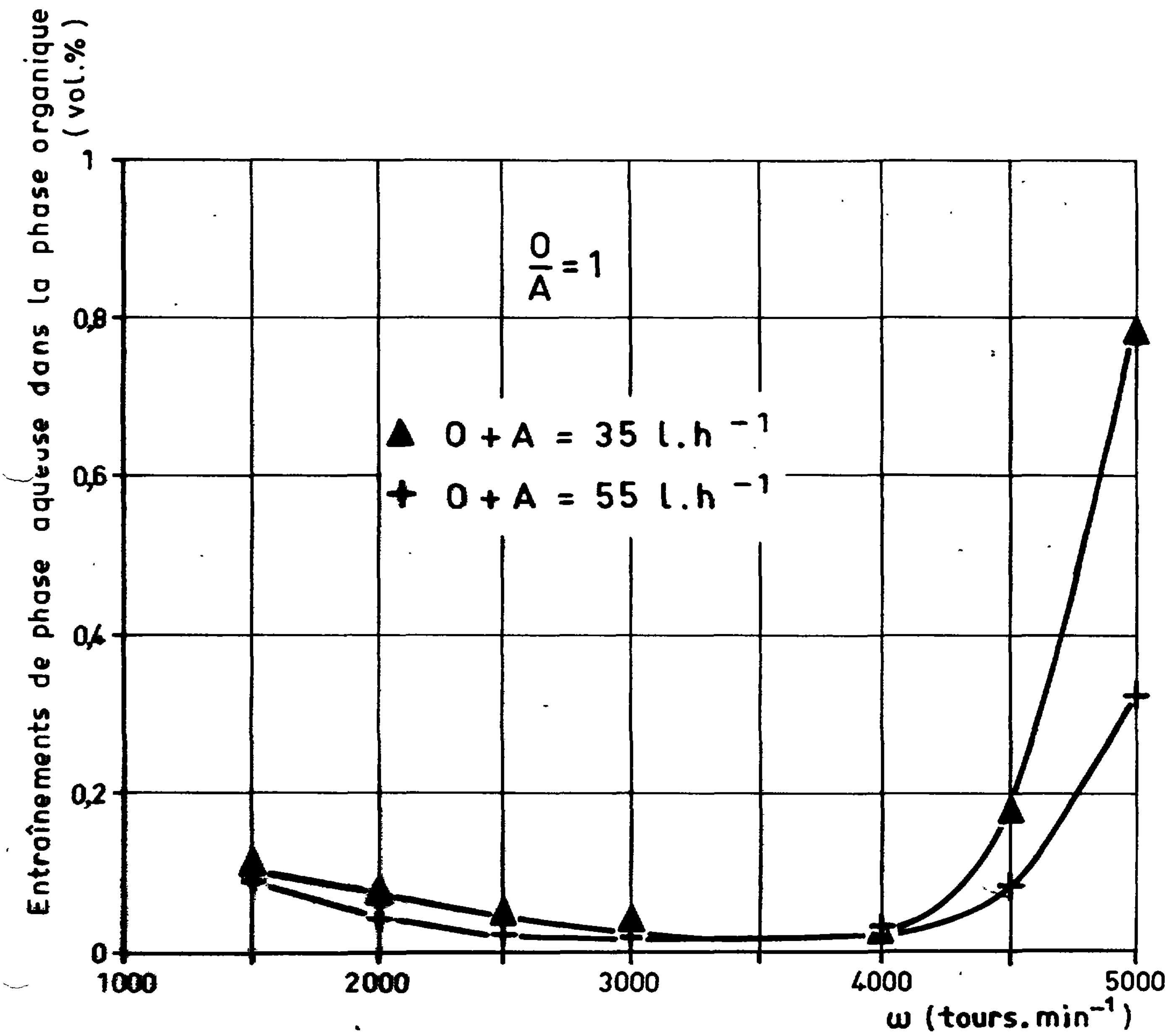

Fig. 6 ._ Fonctionnement hydrodynamique de l'extracteur avec disques à arête circulaire.

TRAITEMENT D'ALLIAGES D'URANIUM ENRICHI IRRADIES PAR LE PROCEDE DE VOLATILISATION DES HALOGENURES

Michel BOURGEOIS
et
Michel PERROT (Ugine Kuhlmann)

COMMISSARIAT A L'ENERGIE ATOMIQUE
Direction des Matériaux et Combustibles Nucléaires
Département de Chimie
Services de Chimie des Combustibles Irradiés
Service de Génie Chimique Radioactif
Section d'Etude des Procédés Avancés

ABSTRACT

The treatment of enriched-uranium alloys of the uranium-aluminium or uranium-zirconium type by volatilization of the fluorides is now being tested with irradiated fuels in the Attila plant at Fontenay-aux-Roses.

After a brief description of the plant and of the chemical principle involved in the method used, the authors give the results of the most recent work done. These tests involved irradiated uranium-aluminium or uranium-zirconium alloys with increasingly short cooling times - from a few years to a few months. A beta-activity of several tens of thousands of curies was utilized in the last test.

The operations proceeded in a fully satisfactory manner and confirmed the effectiveness of the method as well as the smooth functioning of the apparatus. Uranium is recovered in the form of hexafluoride with excellent decontamination factors. Activity due to uranium-237 and iodine-131 was observed in the case of alloys with a cooling time of 90 days.

The uranium yield has still to be precisely determined by means of tests involving relatively large amounts of the alloy (an element of the Pégase type).

The results obtained are very encouraging and justify a programme to study the treatment of breeder reactor fuels by volatilization of halides.

RESUME

Le traitement des alliages d'uranium enrichi du type uranium-aluminium ou uranium-zirconium par volatilisation des fluorures est actuellement en cours d'expérimentation, sur combustibles irradiés, dans l'installation ATTILA, au Centre d'Etudes Nucléaires de Fontenay-aux-Roses.

Après une brève description de l'installation et un rappel du schéma chimique du procédé utilisé on expose les résultats des travaux les plus récents. Ces essais ont porté sur des alliages uranium-aluminium ou uranium-zirconium irradiés, avec des durées de refroidissement de plus en plus courtes : de quelques années à quelques mois. Le dernier essai a mis en jeu une activité β de plusieurs dizaines de milliers de curies.

Les opérations se sont déroulées de façon tout à fait satisfaisante et ont confirmé aussi bien l'efficacité du procédé que le bon fonctionnement des appareillages. L'uranium est récupéré

sous forme d'hexafluorure avec d'excellents facteurs de décontamination. Dans le cas d'alliages dont le temps de refroidissement est de 90 jours, on observe une activité due à l'uranium 237 et à l'iode 131.

Le rendement de récupération de l'uranium doit être précisé grâce à des essais portant sur des quantités relativement importantes d'alliage (un élément du type Pégase).

Les résultats obtenus, très encourageants, incitent au développement du programme d'étude du traitement des combustibles des réacteurs surrégénérateurs par volatilisation des halogénures.

I - INTRODUCTION

L'étude des procédés de traitement des combustibles irradiés par volatilisation des halogénures a débuté en 1957 au Département de Chimie du Commissariat à l'Energie Atomique [1][2]. Depuis 1959, la Société UGINE KUHLMANN a été étroitement associée au C.E.A. pour ces recherches, au moyen de différents contrats [3].

Après des recherches effectuées sur l'emploi de fluorures fondus ou de fluorures d'halogènes comme milieu réactionnel, les études ont été dirigées vers les procédés en phase gazeuse utilisant la technique des lits fluidisés de particules inertes [4]. Ces procédés se sont rapidement révélés particulièrement intéressants dans le cas des alliages à base d'uranium très enrichi, comme les alliages uranium-zirconium gainés zircaloy ou uranium-aluminium gainés aluminium.

A la suite d'essais à l'échelle laboratoire, le procédé a été expérimenté dans une installation pilote à l'échelle du kilogramme d'alliage sur du combustible non irradié (alliages U-Zr) [5][6]. En 1962 et 1963, la Société UGINE-KUHLMANN a construit et exploité une unité pilote capable de traiter plusieurs kilogrammes d'alliages uranium-zirconium non irradiés par jour [7].

Les résultats obtenus ayant été jugés satisfaisants, il a été envisagé dès 1962 de construire une cellule alpha-gamma pour expérimenter ces procédés sur combustibles irradiés. L'étude de cette réalisation a été confiée sous contrat à la Société UGINE KUHLMANN, assistée de l'OMNIUM TECHNIQUE DE MECANIQUE. Décidée en avril 1964, la construction de cette installation appelée "ATTILA" a commencé en septembre 1964 pour s'achever deux ans après. Le premier essai a été effectué en mars 1967 sur de l'alliage uranium-zirconium non irradié. Un an plus tard, l'installation était mise en actif, après une série de quatre essais sur des alliages non irradiés.

En mai 1969, vient de s'achever le 5ème essai sur combustible irradié. L'exploitation de l'installation est assurée par une équipe mixte CEA-UGINE-KUHLMANN.

Parallèlement à cette expérimentation se poursuit un programme d'études, lancé en 1967, concernant la mise au point d'un procédé de traitement, par volatilisation des halogénures, des combustibles du type oxydes mixtes UO_2-PuO_2 gainés d'acier inoxydable. /8/ /9/

II - DESCRIPTION GENERALE DE L'INSTALLATION ATTILA

L'ensemble ATTILA est implanté au Centre d'Etudes Nucléaires de Fontenay-aux-Roses, dans le bâtiment "Radiochimie" du Département de Chimie. Il comprend essentiellement une cellule chaude, étanche et ventilée, protégée gamma, dans laquelle sont logés les principaux appareils nécessaires au traitement des alliages irradiés (fig. 1) /10/. Les effluents gazeux du procédé sont neutralisés dans une cellule annexe ventilée. Pour les analyses en ligne, un laboratoire a été aménagé sous la cellule principale.

La cellule chaude est constituée d'un caisson en tôle d'acier inoxydable de 10 m de longueur, 4 m de largeur et 5 m de hauteur environ. La protection gamma est réalisée par un empilement de blocs à redans en béton baryté de 0,85 m d'épaisseur (fig. 2). La surveillance des opérations est possible grâce à sept hublots disposés sur trois faces et à un éclairage intérieur très puissant. Deux postes d'observation à l'aide d'un périscope coudé à vision binoculaire ont été également aménagés. Un circuit fermé de télévision complète ces dispositifs d'observation.

L'équipement intérieur de manutention et de télémanipulation comprend :

- deux télémanipulateurs du type "maître-esclave Argonne Modèle 8" situés à poste fixe à une extrémité de la cellule,
- un robot "General Mills Modèle 150"
- un pont roulant de 5 kN
- un palan pneumatique de 5 kN.

L'entrée du combustible irradié et l'évacuation de déchets solides se font en utilisant le système de joints à triple effet, "La Calhène - Licence CEA". Les échantillons de produits à analyser peuvent être transférés pneumatiquement vers la chaîne blindée "Candide", implantée dans un laboratoire voisin.

Les appareils sont placés de part et d'autre d'une ossature support située dans l'axe longitudinal de la cellule. Ils sont tous en nickel et peuvent être montés ou démontée à l'aide des engins et outils de télémanipulation. Toutes les liaisons sont assurées par des raccords ou prises télémanipulables.

Les utilités et l'alimentation en réactifs se trouvent à l'extérieur de la cellule. La commande de l'appareillage et le contrôle de l'installation se font à partir d'un tableau synoptique.

III - PRINCIPE DU PROCEDE DE TRAITEMENT

Le schéma chimique du procédé utilisé est analogue à celui étudié aux Etats Unis [4][11][12].

Les principales étapes du traitement sont les suivantes (fig. 3) :

a) - Chloruration : l'aluminium ou le zirconium sont volatilisés sous forme de chlorure $AlCl_3$ ou $ZrCl_4$, par action de chlorure d'hydrogène à 300-400°C. Cette réaction est effectuée dans un réacteur de 12 cm de diamètre au sein d'un lit fluidisé d'alumine de granulométrie 250 µ. L'uranium reste sous forme de chlorure non volatil. Les gaz sont filtrés à la sortie du réacteur par passage sur un filtre de même diamètre comportant un lit statique d'alumine.

Le chlorure d'aluminium ou de zirconium est ensuite hydrolysé à 400°C dans un réacteur à lit fluidisé de sable. Cette opération conduit aux oxydes, qui sont moins corrosifs et plus faciles à stocker que les chlorures.

Avant leur neutralisation dans la cellule annexe, les gaz sont filtrés sur des bougies en nickel fritté. A ce stade, les produits de fission gazeux (Kr, Xe, I) ou donnant des chlorures volatils (Zr, Nb, Sb) sont éliminés au moins partiellement.

b) - Fluoration : le chlorure d'uranium présent dans le lit fluidisé et le filtre, est transformé en hexafluorure par action de fluor dilué dans de l'azote. Cette réaction est faite sans fluidisation en enrichissant progressivement le mélange en fluor (de 5 à 90 %) à des températures croissantes (30-500°C).

L'hexafluorure d'uranium accompagné des fluorures volatils des produits de fission est piégé à 100°C sur deux colonnes en série, de 5 cm de diamètre, garnies de pastilles de fluorure de sodium.

c) - Désorption de l'hexafluorure d'uranium : l'hexafluorure d'uranium est purifié par désorption sélective en portant à 400°C la température des colonnes de fluorure de sodium. L'hexafluorure d'uranium désorbé sous un faible débit de fluor est recueilli dans un piège refroidi à -100°C d'où il pourra être transféré par sublimation dans un pot placé dans une boîte à gants du laboratoire en sous-sol.

IV - CONDUITE ET DEROULEMENT DES ESSAIS

La charge d'alliage irradié est introduite dans le réacteur d'attaque sous la forme de plaquettes d'environ 80 mm de long, 30 mm de large et quelques millimètres d'épaisseur, provenant du découpage des plaques constituant les éléments de combustible. Ce découpage est effectué au Laboratoire d'Etudes des Combustibles Irradiés de Cadarache (LECA). Après fermeture des appareils, l'étanchéité de l'ensemble de l'appareillage est alors vérifiée.

Pour les quatre premiers essais actifs, tous les appareils n'ont été vidangés qu'à la fin du 2ème et du 4ème essais. Seules sont changées, après chaque essai, les colonnes d'alumine activée. De même, le pot de recette des oxydes placé sous les filtres du réacteur de pyrohydrolyse est vidé en fin de chaque opération.

Le tableau I donne les conditions opératoires des cinq essais effectués sur combustibles irradiés. Ces conditions opératoires avaient été déjà étudiées et définies sur des alliages non irradiés dans l'installation ATTILA ainsi que dans une installation antérieure /13 à 18/.

a) - <u>Chloruration</u>.

Elle est suivie par analyse en ligne de l'hydrogène formé. Les gaz sont prélevés dans la cellule annexe avant la colonne de neutralisation. Après piégeage de l'eau et de l'acide chlorhydrique, la concentration en hydrogène dans le mélange azote-hydrogène est donnée par la différence de conductivité thermique avant et après élimination de l'hydrogène par oxydation sur oxyde de cuivre à 300°C et condensation de l'eau formée /19/. Le dosage du tritium dans cette eau permet de connaître la quantité de cet élément dégagée pendant la chloruration.

A partir de l'essai A 2, nous avons pu suivre également cette étape grâce à la détection du krypton 85 dans la ventilation par les appareils du Service de Protection contre les Rayonnements.

La figure n° 4 montre l'évolution des différents paramètres enregistrés au cours de la chloruration de l'essai A 2.

A 450°C, avec des débits de gaz de 1000 l/h de chlorure d'hydrogène et 800 l/h d'azote, on observe des vitesses de réaction qui peuvent atteindre 1 kg/h pour les alliages uranium-zirconium et 0,4 kg/h pour les alliages uranium-aluminium.

Malgré la présence de quantités importantes de zirconium 95 et de niobium 95 (pour l'essai A 4, respectivement 1250 et 1850 Ci), ces deux éléments ne sont pas détectés dans la solution sodique de neutralisation du chlorure d'hydrogène. Ceci prouve la <u>très grande efficacité</u> des bougies filtrantes en nickel fritté placées après le réacteur de pyrohydrolyse.

A la fin de chaque chloruration, on observe une augmentation de l'activité dans la solution de neutralisation due à l'antimoine 125 dont le pentachlorure ne réagit pas avec la vapeur d'eau à 400°C.

Au cours de l'essai A 4 pour lequel le temps de refroidissement du combustible n'était que de <u>90 jours</u>, le rejet total en iode 131 dans la ventilation a pu être évalué à <u>1 mCi</u> environ, alors que la quantité calculée dans la charge était voisine de 1 Ci. Ce rejet correspondait à des doses inférieures à 1 CMA population dans l'air de la ventilation de l'installation. Pour cet essai, la solution sodique contenait en fin de chloruration 70 mCi d'iode 131, soit 7 % de la quantité calculée dans la charge et 250 mCi d'antimoine 125, soit environ 8 % de la quantité totale calculée.

L'opération de chloruration est la plus délicate à conduire, le zirconium ou l'aluminium représentant la majeure partie de l'alliage. D'autre part la température relativement élevée de sublimation des chlorures, et notamment du tétrachlorure de zirconium (331 °C) nécessite une attention toute particulière au chauffage des appareils et des tuyauteries afin d'éviter les bouchages par condensation.

b) - Fluoration. (fig. 5)

Cette deuxième étape est suivie également par analyse en ligne des composés formés [19] : Par chromatographie en phase gazeuse, il est possible de suivre l'évolution des produits tels que F_2, Cl_2, ClF, ClF_3, ClO_2F, ClO_3F et d'agir en conséquence sur la conduite de cette réaction en modifiant la température et la concentration en fluor. Pour cette analyse, les gaz sont prélevés après les deux colonnes de fluorure de sodium.

Il est également possible de suivre l'évolution de l'activité spécifique des gaz avant et après les colonnes de fluorure de sodium, grâce à des analyseurs spécialement mis au point à cet effet : les gaz prélevés à l'aide d'un robinet échantillonneur de chromatographe sont hydrolysés par de l'air humide. Les produits provenant de l'hydrolyse des fluorures volatils radioactifs sont filtrés sur papier filtre et comptés [19]. Par comptage alpha, on peut également suivre le comportement de l'uranium.

Au cours de cette étape, il n'est pas observé de rejet de composés radioactifs dans les effluents gazeux. En conséquence, l'hexafluorure de tellure est totalement fixé sur l'alumine activée, confirmant les résultats de nos études antérieures [13].

c) - Désorption de l'hexafluorure d'uranium.

Elle est suivie par analyse en ligne (comptage alpha et gamma), les prélèvements étant effectués après les colonnes de fluorure de sodium, après le cristallisoir et après la colonne de garde de fluorure de sodium.

d) - Récupération de l'hexafluorure d'uranium.

L'hexafluorure d'uranium est transféré dans des pots placés dans une boîte à gants logée dans le laboratoire sous la cellule. Ce transfert est effectué avec un balayage d'azote (50 l/h) en réchauffant le cristallisoir.

L'hexafluorure est ensuite purifié par pompage sous vide à -80 °C dans un pot en KelF puis hydrolysé dans ce pot au moyen d'une solution nitrique afin de faciliter les analyses.

e) - Echantillonnage et analyse des produits solides.

Après les essais A 2 et A 4, tous les appareils ont été vidangés et leur contenu échantillonné au moyen d'un échantillonneur à écoulement spécial [17]. Les échantillons sont ensuite transférés dans la cellule Candide pour y subir divers traitements (broyage, fusion alcaline, dissolution) destinés à les mettre sous une forme convenant aux laboratoires d'analyse.

Cependant, afin d'obtenir plus rapidement des résultats, nous développons actuellement des méthodes d'analyse directe sur les produits solides après broyage, par fluorescence X pour le dosage de l'uranium, et par spectrométrie gamma, avec collimation, pour le dosage des radionucléides. Nous ne disposons des résultats complets que pour les essais A 1 et A 2.

V - RESULTATS

1 - Facteurs de décontamination

Pour les quatre essais, nous avons obtenu des facteurs de décontamination excellents : l'activité totale due aux produits de fission émetteurs bêta, gamma retrouvée dans l'hexafluorure d'uranium recueilli est inférieure ou égale à

5.10^{-8} Ci/g d'uranium

Pour les deux essais A 1 A 2, correspondant à du combustible très refroidi, l'activité bêta gamma due aux produits de fission n'est pas détectable par spectrométrie avec une diode Ge (Li), ce qui correspond à moins de

3.10^{-8} Ci/g d'uranium

Pour l'essai A 3 portant sur de l'alliage uranium-zirconium, refroidi plus de 18 mois, et sur 10 g d'alliage uranium-aluminium refroidi 275 jours, nous avons retrouvé dans l'hexafluorure d'uranium :

^{137}Cs : 3.10^{-8} Ci/g U soit un F.D = 10^8
^{95}Zr : 5.10^{-9} Ci/g U F.D = 10^7
^{95}Nb : 10^{-8} Ci/g U F.D = 10^7

Pour l'essai A 4 portant sur une plaque d'alliage U-Al "Pégase" (375 g) refroidie 90 jours et sur 165 g d'alliage U-Al "Pégase" refroidi 310 jours, nous avons recueilli sous forme d'hexafluorure 21,4 g d'uranium dont l'analyse par spectrométrie gamma a révélé la présence de

5 mCi d'iode 131
et 28,8 mCi d'uranium 237

Après décroissance de l'iode et de l'uranium 237, l'analyse montre que l'uranium recueilli contient moins de 10^{-6} Ci de ^{106}Ru + ^{106}Rh, soit moins de

5.10^{-8} Ci ^{106}Ru + ^{106}Rh/g U

Le facteur de décontamination pour ces deux éléments est donc supérieur à 10^9.

L'activité totale β γ calculée dans la charge étant de l'ordre de 11.000 Ci, le facteur de décontamination global obtenu est supérieur à 10^{10}.

Il faut cependant remarquer que, comme nous le supposions, l'uranium recueilli contient une quantité non négligeable de molybdène (7 à 8.000 ppm pour les essais A 1 et A 2).

2 - Bilan uranium

Nous ne possédons actuellement que le bilan complet pour l'ensemble des essais A 1 et A 2.

La quantité totale d'uranium transférée sous forme d'hexafluorure du cristallisoir représente 88,45 % de la quantité totale comptabilisée (87,41 % sous forme d'UF_6 purifié + 1,04 % retrouvé sur les pièges du circuit de purification). Afin de tirer le maximum de renseignements possible, nous avons été conduits à prélever pour les analyses en ligne, une fraction non négligeable des gaz pendant les étapes de fluoration et de désorption : l'uranium ainsi prélevé représente 8,85 % de la quantité totale.

Après désorption de l'hexafluorure d'uranium, il ne reste que 0,25 % de la quantité totale d'uranium sur l'ensemble des pastilles de fluorure de sodium des trois colonnes. Cet uranium ne doit pas être considéré comme perdu, les pastilles de fluorure de sodium pouvant être réutilisées plusieurs fois.

Les pertes en uranium s'élèvent donc à 2,7 %. Elles proviennent presque exclusivement de la rétention sur les lits du réacteur d'attaque (1,9 %) et du filtre statique (0,8 %). Elles peuvent s'expliquer par le fait que la température maximum de fluoration a été fixée à 400°C afin de ménager l'appareillage. On remarquera aussi que la quantité d'uranium mis en jeu (quelques dizaines de grammes) est relativement faible eu égard aux dimensions de l'appareillage.

Dans le but d'établir de façon plus précise un bilan uranium, nous venons d'entreprendre un essai (A 5) sur un élément complet du réacteur Pegase (24 plaques d'alliage uranium-aluminium d'un poids total voisin de 6 kg, refroidies 5 mois, l'activité totale β γ calculée étant supérieure à 75.000 Ci).

3 - Comportement des produits de fission

La répartition des produits de fission dans les différents appareils est donnée, pour les essais A 1 et A 2, dans le tableau II. L'activité des éléments à vie courte tels que ^{95}Zr et ^{95}Nb étant faible devant l'activité totale, le bilan pour ces deux éléments n'a qu'une valeur indicative.

On constate que pour les éléments ayant une activité significative (Ru - Rh - Co - Ce - Pr) la plus grande partie d'entre eux (90 %) reste concentrée dans le réacteur d'attaque.

VI - CONCLUSIONS

Les résultats obtenus à ce jour sont très encourageants, tant sur le plan de la décontamination de l'uranium que sur le plan technologique. Nos efforts portent actuellement sur l'amélioration du rendement de récupération de l'uranium qui, compte tenu des résultats obtenus sur combustibles non irradiés, devrait pouvoir dépasser 99 % dans le cas de charges importantes.

Ces résultats nous encouragent également à poursuivre notre programme pour le traitement des combustibles de la filière à neutrons rapides. Des études sont en cours, à la fois, au Centre de Recherches de Lyon de la Société UGINE KUHLMANN, pour la mise au point d'un schéma de traitement sur oxyde d'uranium seul, et au Département de Chimie du CEA à Fontenay-aux-Roses, pour l'expérimentation sur des aiguilles non irradiées d'oxydes mixtes UO_2-PuO_2 (installation CLOVIS).

Ce procédé pourra être expérimenté ultérieurement sur des combustibles irradiés dans l'installation "ATTILA" moyennant la modification de l'appareillage intérieur existant.

La Société UGINE KUHLMANN a également été chargée sous contrat d'une étude économique d'un tel procédé dans le cas d'une usine d'une capacité de 40 kg/jour (U + Pu) d'oxydes mixtes UO_2-PuO_2 gainés acier inoxydable [20].

BIBLIOGRAPHIE

[1] P. FAUGERAS
Le traitement chimique des combustibles nucléaires irradiés. Procédés dits "de voie sèche".
Energie Nucléaire vol. 7, n° 4, 214-227; vol. 7, n° 6, 346-353 (1965)

[2] M. BOURGEOIS
Le traitement des combustibles irradiés par des méthodes non aqueuses.
B.I.S.T. n° 66, 65-72 (1962)

[3] M. BOURGEOIS - B. COCHET-MUCHY
Le retraitement des combustibles irradiés par voie sèche.
Energie Nucléaire, vol. 10, n° 3, 192-200 (1968)

[4] J.J. REILLY - W.H. REGAN - E. WIRSING - L.P. HATCH
Reprocessing of reactor fuels by volatilization through the use of inert fluidized beds.
BNL 663

[5] P. FAUGERAS - M. BOURGEOIS
Traitement des combustibles irradiés par volatilisation des fluorures.
Symposium ENEA, OECD, Eurochemic, Bruxelles, avril 1963

[6] M. BOURGEOIS - P. FAUGERAS
Le traitement des combustibles irradiés par les halogènes et leurs composés.
Genève 1964. A Conf. 28-8-66

[7] M. BOURGEOIS - P. NOLLET
Etude du traitement chimique des combustibles uranium-zirconium par voie sèche.
C.E.A. R 2508 (Août 1964)

[8] M. BOURGEOIS
Le traitement des combustibles irradiés par des méthodes non aqueuses.
B.I.S.T. n° 128, 3-11 (1968)

[9] M. BOURGEOIS - P. FAUGERAS
Traitement des combustibles par voie sèche. Etudes réalisées en France.
C.E.A. CONF. 1195 - Communication - Symposium sur le retraitement par voie sèche, Mol, 28-29 Octobre 1968

[10] M. BOURGEOIS - G. LEFORT - G. MANEVY - Y. ROCHEDEREUX
"ATTILA" : Installation active pour l'étude de traitement de combustibles irradiés par volatilisation des fluorures.
15e Conférence sur la Technologie des Systèmes Télémanipulés, Chicago, 6-10 Nov. 1967

[11] D. RAMASWAMI - N.M. LEVITZ - J.T. HOMES - A.A. JONKE
Engineering Development of fluid bed fluoride volatility process Part 1 Bench scale investigation of a process for zirconium-uranium alloy fuel.
ANL. 6829 (Déc. 1964)

[12] A.A. CHILENSKAS - K.S. TURNER - J.E. KINCINAS - G.L. POTTS
Engineering Development of fluid bed volatility process. Part 10 Bench scale studies on irradiated stighly enriched Uranium Alloy fuels.
ANL. 6994 (1966)

[13] Rapport semestriel du Département de Chimie
(Nov. 1965 - Mai 1966)
Note CEA - N - 616 p. 247-291

[14] Rapport semestriel du Département de Chimie
(Juin 1966 - Nov. 1966)
Note CEA - N - 816 p. 325-345

[15] Rapport semestriel du Département de Chimie
(Déc. 1966 - Mai 1967)
Note CEA - N - 856 p. 275-292

[16] Rapport semestriel du Département de Chimie
(Juin 1967 - Nov. 1967)
Note CEA - N - 969 p. 285-299

[17] Rapport semestriel du Département de Chimie n° 5
(Déc. 1967 - Mai 1968)
Note CEA - N - 1044 p. 245-251

[18] Y. ROCHEDEREUX - M. PERROT - M. MANTEGA - G. MANEVY - M. BOURGEOIS
Traitement des alliages à base d'uranium enrichi. Premiers résultats de l'exploitation de l'installation "ATTILA".
C.E.A. CONF. 1194 - Communication - Symposium sur le retraitement par voie sèche, Mol, 28-29 Octobre 1968

[19] M. MANTEGA - H. MARLIN - G. MANEVY
Traitement des alliages à base d'uranium enrichi. Analyses et contrôles en ligne utilisés dans l'installation "ATTILA"
C.E.A. - CONF. 1193 - Communication - Symposium sur le retraitement par voie sèche, Mol, 28-29 Octobre 1968

[20] B. COCHET-MUCHY - J. SAUTERON
Traitement des combustibles irradiés par voie sèche. Aspects économiques.
Economics of Nuclear Fuels - SM - 105/16 p. 361-380
I.A.E.A. Vienna, 1968

Tableau I

CONDITIONS OPERATOIRES

Essai n°	A 1	A 2	A 3	A 4	A 5
Nature de l'alliage	U Zr	U Zr	UZr+(UAl)	U Al	U Al
Poids d'alliage chargé(g)	1955	1727	2290+(10) 2300	375+165 540	6280
Durée de refroidissement	> 1 an	> 1 an	>1 an 275j	90j 311j	150j
Activité globale β γ	300	230	1100	11.000	77.000
Chloruration					
. durée (h)	8	12	10,5	6,5	36,65
. température (°C)	400-450	400-450	400-450	400-450	400-450
. débit total des gaz N_2 + HCl ($m^3.h^{-1}$)	1,8-2	1,8-2	1,8	1,8	1,8
. concentration HCl (% volume)	30-90	30-90	30-55	30-55	15-55
Fluoration					
. durée (h)	14,5	15,5	8,25	9	19,50
. température (°C)	30-400	30-400	30-500	30-500	30-500
. débit total des gaz N_2 + F_2 ($l.h^{-1}$)	100-200	100-200	100-200	100-200	100
. concentration F_2 (% volume)	20-90	20-90	20-90	20-90	20-90
Désorption UF_6 fixé sur NaF					
. durée (h)	5,5	6,5	5	5	9,15
. température (°C)	30-400	30-400	30-400	30-400	30-500
. débit F_2 ($l.h^{-1}$)	50	50	50	50	50

Tableau II

REPARTITION DES PRODUITS DE FISSION DANS LES SOLIDES SOUTIRÉS
APRES LES ESSAIS A 1 ET A 2

(Les résultats sont exprimés en pourcentage de l'activité totale comptabilisée
pour chaque radionucléide
ND = non décelé par spectrométrie gamma)

	$^{95}\mathrm{Zr}$	$^{95}\mathrm{Nb}$	$^{106}\mathrm{Ru}+^{106}\mathrm{Rh}$	$^{125}\mathrm{Sb}$	$^{134}\mathrm{Cs}$	$^{137}\mathrm{Cs}$	$^{144}\mathrm{Ce}+^{144}\mathrm{Pr}$
Réacteur d'attaque	98,84	95,36	98,41	ND	99,18	90,39	92,59
Filtre à lit statique	ND	ND	ND	ND	0,80	9,43	7,22
Réacteur de pyrohydrolyse	0,58	0,91	1,53	21,76	0,006	0,07	ND
Filtres de pyrohydrolyse	0,46	3,50	0,01	40,00	0,0007	0,0008	0,001
Colonnes de NaF n° 1	ND	ND	0,01	ND	0,00005	ND	0,04
n° 2	0,10	-	0,02	ND	0,008	0,10	0,11
n° 3 (garde)	0,04	0,19	0,002	ND	0,0004	0,005	0,004
Colonnes d'alumine activée n° 1	0,04	0,01	0,006	ND	0,0001	0,001	0,002
n° 2	0,08	0,01	0,0002	ND	0,00006	0,0007	0,0006
Colonne de neutralisation à solution de soude	ND	ND	ND	38,24	ND	ND	ND
Activité retrouvée (% de la quantité calculée)	412	48,4	25	3	90,4		18,5

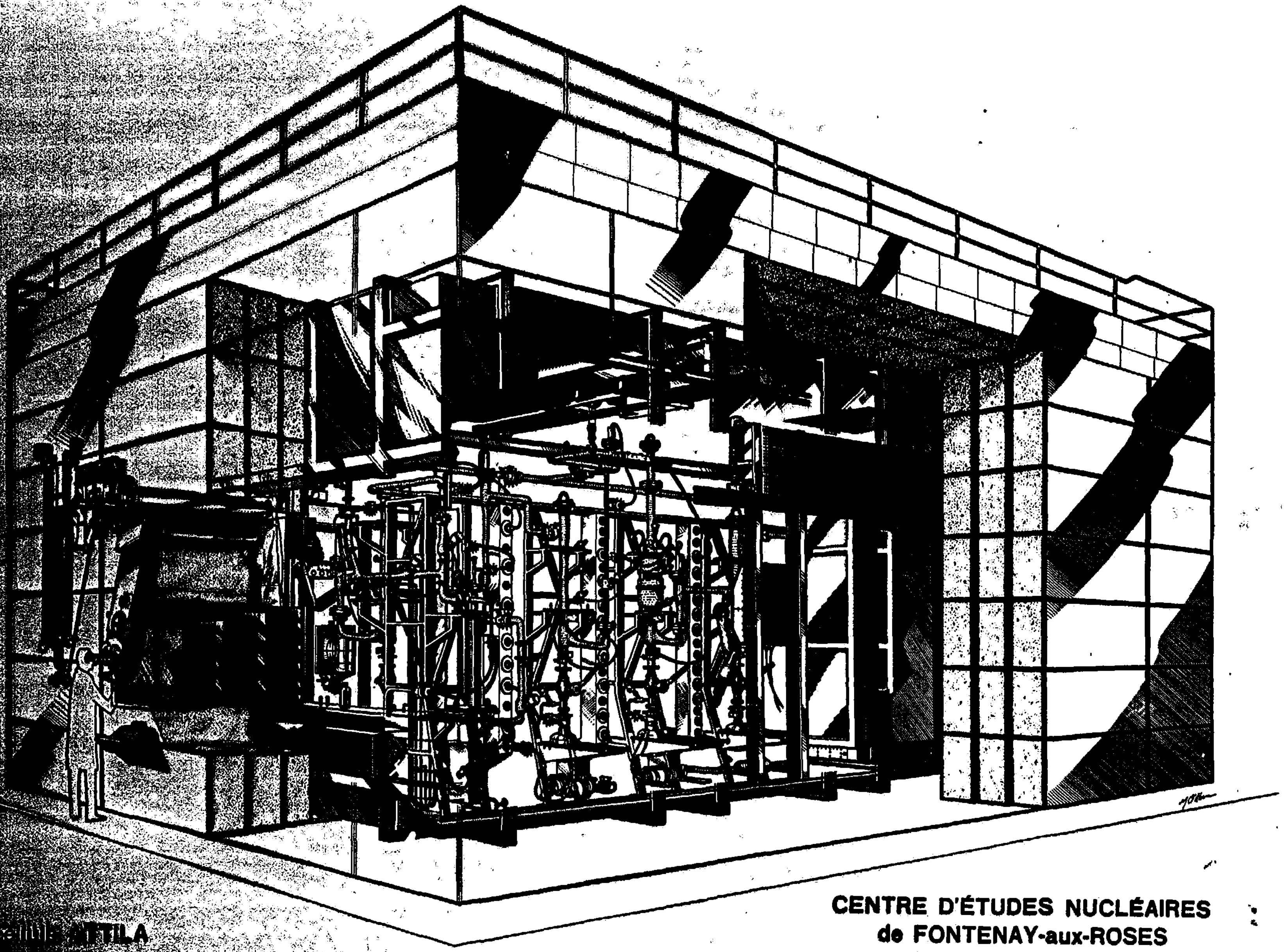

CENTRE D'ÉTUDES NUCLÉAIRES
de FONTENAY-aux-ROSES
Département de Chimie

La cellule ATTILA

Fig. 1

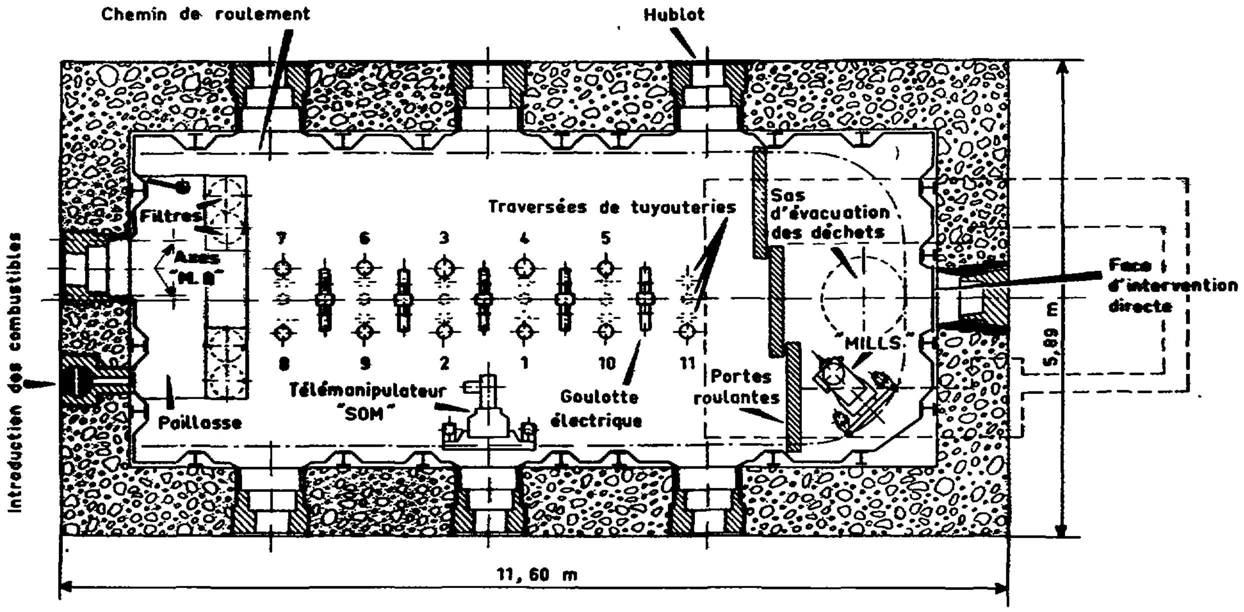

1_ Colonne de sécurité (NaF)
2_ Réacteur à lit fluidisé
3_ Filtre statique
4_ Réacteur de pyrohydrolyse
5_ Filtres
6-7_ Colonnes NaF
8 _ Piège froid
9 _ Colonne de garde NaF
10-11 _ Alumine activée

Fig. 2.- Plan de la Cellule "ATTILA"

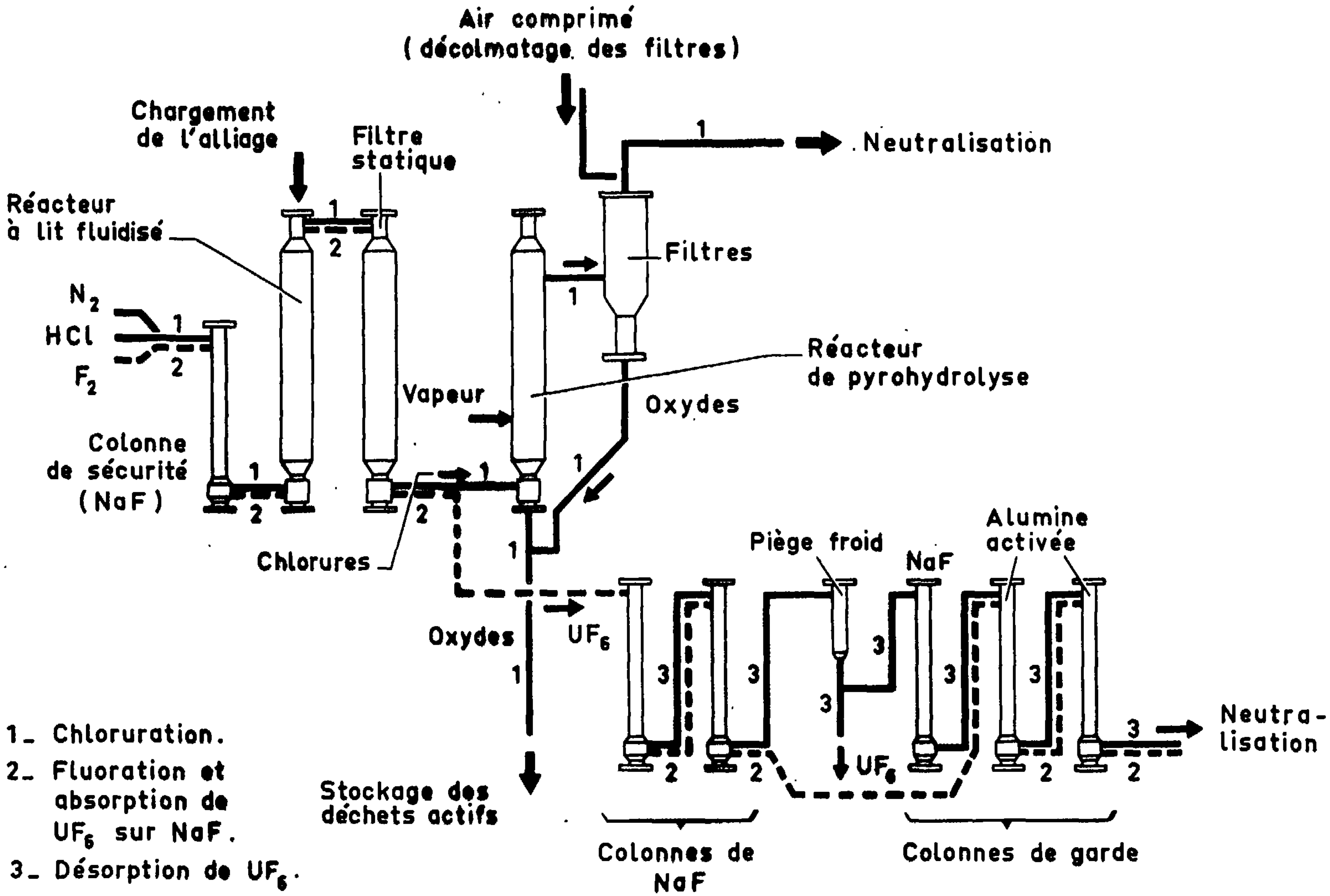

Fig. 3 – Schéma chimique du procédé de traitement

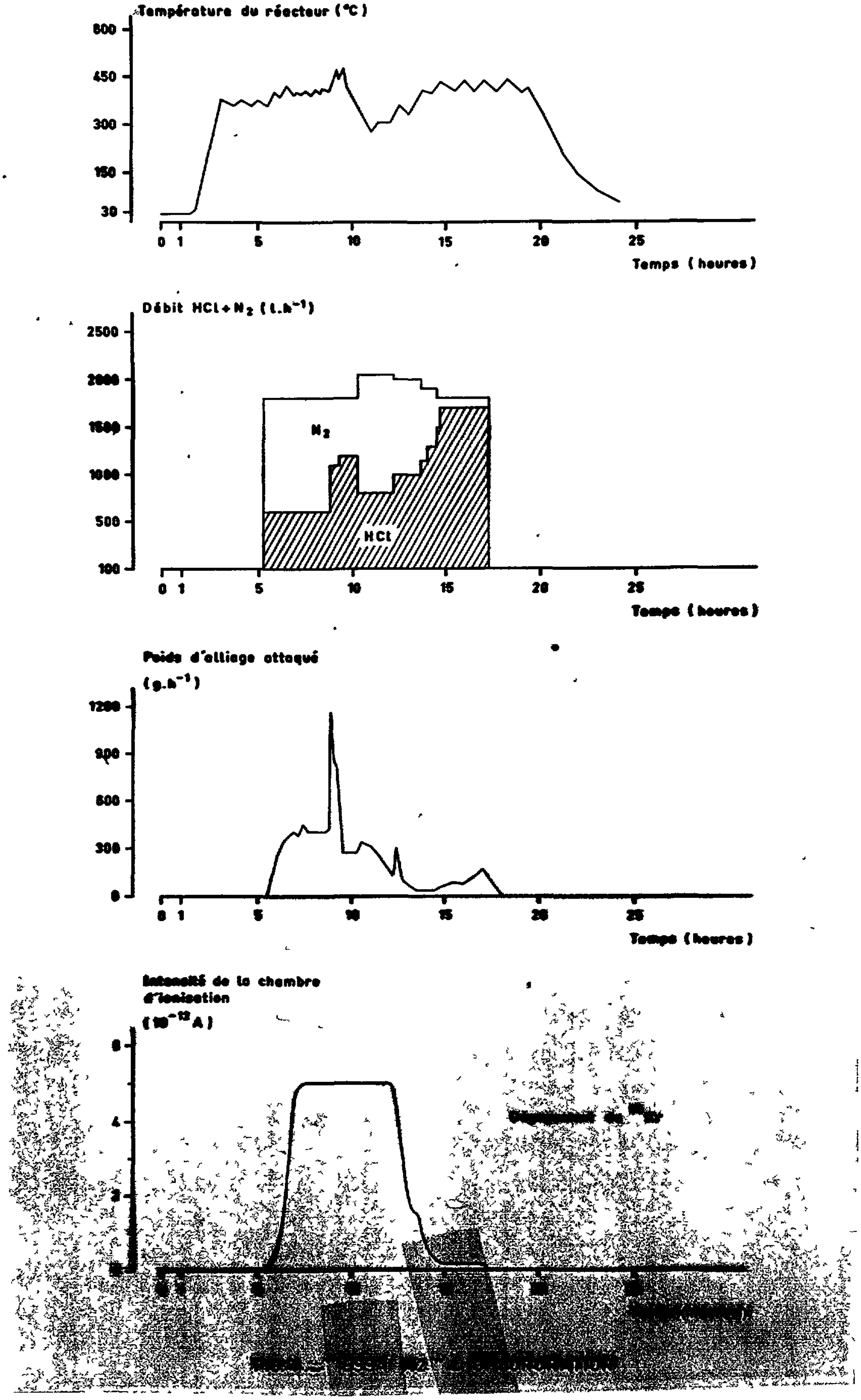

[illegible] — ESSAI N°2 — CHLORURATION

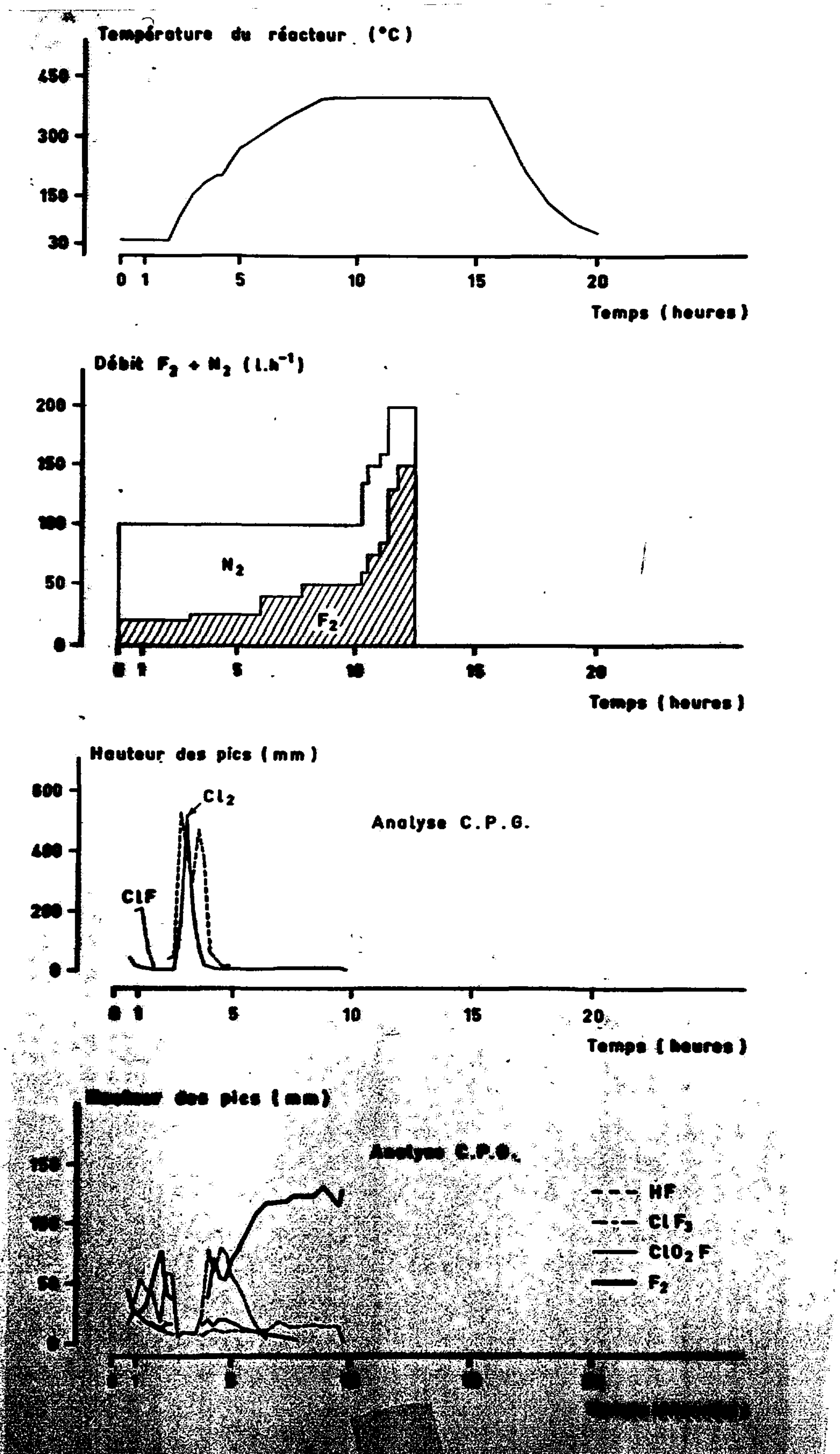
Température du réacteur (°C)
450
300
150
30
0
1
5
10
15
20
Temps (heures)
Débit $F_2 + N_2$ ($l.h^{-1}$)
200
150
100
50
0
N_2
F_2
0
1
5
10
15
20
Temps (heures)
Hauteur des pics (mm)
600
400
200
0
Cl_2
ClF
Analyse C.P.G.
0
1
5
10
15
20
Temps (heures)
Hauteur des pics (mm)
Analyse C.P.G.
150
100
50
0
HF
ClF_3
ClO_2F
F_2

FIG. 2 [illegible]

LE TRAITEMENT CHIMIQUE
DES COMBUSTIBLES FORTEMENT IRRADIES
EN FRANCE

Rapport de synthèse des communications françaises

Jean SAUTERON et Pierre FAUGERAS

COMMISSARIAT A L'ENERGIE ATOMIQUE
Direction des Matériaux et Combustibles Nucléaires
Département de Chimie
Services de Chimie des Combustibles Irradiés

ABSTRACT

The CEA's experience in the treatment of highly irradiated fuels is relatively recent and has not yet gone beyond the stage of laboratory studies and experiments. This work has been and is being done in the radiochemical laboratories at Fontenay-aux-Roses, at the Marcoule pilot plant and at the AT1 plant at La Hague (designed for treating irradiated fuel from the core of the Rapsodie reactor). All these plants function under the Department of Chemistry's Irradiated Fuel Chemistry Section.

The following irradiated fuels have been treated:

- Enriched-uranium oxides irradiated up to 20 000 MWd/t in the EL3 reactor (aqueous processing at Fontenay);
- The UO_2 - PuO_2 mixed oxide irradiated up to 45 000 MWd/t in Rapsodie (aqueous processing at Fontenay and then at the AT1 plant);
- The UAl alloy of the Pégase reactor and the UZr alloy of the submarine-engine prototype (dry processing at Fontenay);
- The PuAl alloy of the reactor Célestin (aqueous processing at Fontenay and then at Marcoule pilot plant);
- PuAl targets for the production of transplutonium elements (aqueous processing at Fontenay).

These studies are supplemented by chemical-engineering studies dealing especially with extractors with a short contact time (SGN-Robatel centrifugal extractors).

Research is being continued with a view to extending the limits of aqueous processing (higher combustion rates and shorter cooling times) and determining the technical and economic possibilities of dry processing.

RESUME

L'expérience du CEA sur le traitement des combustibles fortement irradiés est relativement récente et n'a pas encore dépassé le stade des études de laboratoire et des campagnes expérimentales. Elle a été acquise et continue de se développer dans les laboratoires de radiochimie de Fontenayx-aux-Roses, à l'atelier pilote de Marcoule et à l'atelier "AT1" de La Hague (destiné à traiter le combustible irradié du coeur de la pile Rapsodie), installations qui dépendent toutes des Services de Chimie des Combustibles Irradiés du Département de Chimie.

Cette expérience porte sur les combustibles irradiés suivants :

- oxydes d'uranium enrichi irradié jusqu'à 20.000 MWj/t dans le réacteur EL3 (Voie aqueuse - Fontenay),
- oxyde mixte UO_2-PuO_2 irradié jusqu'à 45.000 MWj/t dans Rapsodie (Voie aqueuse - Fontenay puis atelier AT1),
- alliages UAl du réacteur Pégase et UZr du prototype de moteur de sous-marin (Voie sèche - Fontenay)
- alliage PuAl du réacteur Célestin (Voie aqueuse - Fontenay puis atelier pilote de Marcoule),
- cibles PuAl pour la production d'éléments transplutoniens (Voie aqueuse - Fontenay).

Ces études de procédé sont complétées par des études de génie chimique portant notamment sur les appareils d'extraction à temps de contact court (extracteurs centrifuges SGN-Robatel).

Les recherches se poursuivent d'une part en vue de reculer les limites de la voie aqueuse (taux de combustion plus élevés et temps de refroidissement plus courts) et d'autre part pour déterminer les possibilités techniques et économiques de la voie sèche.

I - INTRODUCTION

L'expérience industrielle du traitement des combustibles irradiés acquise par le CEA grâce à l'exploitation des usines de Marcoule et de La Hague est assez ancienne, mais elle porte sur des niveaux d'irradiation qui n'ont guère encore dépassé 2.000 MWj/t. Par contre des essais de laboratoire et des traitements à caractère pilote relativement variés et nombreux ont été effectués sur des combustibles à forte activité spécifique par les services de recherche spécialisés du Département de Chimie. L'expérience ainsi acquise par ces services porte sur les combustibles suivants :

- oxyde UO_2 enrichi irradié jusqu'à 20.000 MWj/t dans le réacteur EL3,
- oxyde mixte UO_2-PuO_2 irradié jusqu'à 45.000 MWj/t dans Rapsodie,
- alliages UAl du réacteur Pégase et UZr du prototype de moteur de sous-marin,
- alliage PuAl du réacteur Célestin,
- cibles PuAl pour la production d'éléments transplutoniens.

En raison de l'ampleur des programmes et grâce aux moyens correspondants mis en oeuvre, ces études sont actuellement en plein développement. La plus grosse partie des recherches se rapporte au procédé d'extraction par solvant (voie aqueuse) mais les alliages UAl et UZr ont fait l'objet d'essais du procédé de volatilisation (voie sèche).

II - DEVELOPPEMENT DES ETUDES

Les études sur le traitement des combustibles irradiés sont menées dans trois Centres du CEA : Fontenay-aux-Roses, Marcoule et La Hague. Les recherches sont lancées à Fontenay-aux-Roses, dans le bâtiment de "Radiochimie", équipé pour travailler en laboratoire sur forte activité $\beta\gamma$ et à l'échelle semi-industrielle en présence de faible activité $\beta\gamma$. Les procédés sont ensuite soumis à l'épreuve d'essais prolongés en présence de forte activité et dans des conditions d'exploitation quasi industrielles à l'atelier pilote de Marcoule. Un second atelier pilote, appelé AT1, situé à La Hague, a été construit pour traiter le combustible irradié de Rapsodie et pour expérimenter les procédés destinés aux combustibles des futurs surgénérateurs. Ces installations dépendent toutes des Services de Chimie des Combustibles Irradiés du Département de Chimie.

1 - VOIE AQUEUSE

Les études de laboratoire se font en général en trois étapes : essais inactifs, essais α (en présence de plutonium) et essais $\alpha\beta\gamma$ (en présence de plutonium et de produits de fission). Ces derniers sont les plus importants car c'est seulement quand on travaille en présence de tous les paramètres réunis que l'on peut connaître et résoudre les difficultés réelles. Ces essais sont réalisés dans des chaînes de cellules blindées et étanches, parmi lesquelles on peut citer : "Cyrano", "Carmen", "Gascogne", etc...

Les études de génie chimique suivent la même voie que les études de laboratoire mais, pour des raisons pratiques, l'étape intermédiaire des essais purement α est souvent court-circuitée. L'étape $\alpha\beta\gamma$ de ces études est constituée par les essais prolongés en atelier pilote. Ces campagnes sont irremplaçables, aussi bien pour expérimenter les procédés en actif que pour éprouver les appareillages et les techniques d'intervention (télémanipulation, décontamination, etc...). En outre elles peuvent mettre en évidence à la longue certains phénomènes qui étaient passés inaperçus au laboratoire.

L'atelier pilote de Marcoule fonctionne depuis plus de six ans et a déjà rendu de grands services pour l'étude de l'extraction du plutonium à partir d'uranium naturel. Son équipement, maintenant complété par une chaîne spéciale pour le traitement des combustibles enrichis, lui permet de recevoir presque tous les types de combustibles qui vont se présenter au cours des prochaines années et, en particulier, les alliages riches en matière fissile fortement irradiés.

L'atelier AT1 de La Hague ne peut recevoir que des aiguilles du coeur de Rapsodie et ne les traiter qu'à raison d'un kilogramme par jour. Néanmoins, son exploitation doit apporter de précieux renseignements sur la chimie du traitement des oxydes très irradiés. Son expérimentation récente en actif a déjà donné des indications très utiles sur les difficultés auxquelles il fallait s'attendre.

2 - VOIE SECHE

Les études de voie sèche se poursuivent depuis plus de dix ans à Fontenay-aux-Roses, en collaboration avec la Société Ugine Kuhlmann. Elles portent sur le procédé utilisant la volatilité des hexafluorures d'uranium et de plutonium.

Après plusieurs années d'essais avec de l'uranium et du plutonium non irradiés ou en présence de traceurs et sur différents types de combustibles, on a construit une grosse cellule blindée capable d'expérimenter le procédé sur combustibles irradiés. Cette cellule, nommée "Attila", fonctionne en actif depuis la fin de 1968 et a fourni tout dernièrement des résultats très intéressants en traitant des plaques d'alliage UAl à l'échelle de plusieurs dizaines de milliers curies d'activité $\beta\gamma$. Une installation de taille plus modeste et uniquement "α", baptisée "Clovis", permet d'étudier l'application du procédé aux oxydes mixtes UO_2-PuO_2.

III - EXPERIENCE ACQUISE SUR DIFFERENTS COMBUSTIBLES

1 - OXYDE UO_2 IRRADIE A 20.000 MWj/t

Les essais de traitement effectués de la fin de 1965 au début de 1968 dans la chaîne "Cyrano" ont d'abord été alimentée par de l'oxyde mixte UO_2-PuO_2 (11 % de Pu) irradié dans le réacteur EL3 de Saclay (2 essais) puis par l'oxyde UO_2 constituant le combustible de ce réacteur (7 essais). Ce dernier, appelé "cristal de neige" à cause de sa forme, contenait initialement 4 % d'uranium 235. Les taux de combustion moyens étaient de 15.000 à 20.000 MWj/t dans les deux cas.

Les essais effectués à partir de ces combustibles ont porté sur deux schémas de procédé :

- celui de l'atelier AT1
- celui du projet d'usine japonaise élaboré en commun par SGN et le CEA.

Les temps de désactivation étaient de 275 à 300 jours pour les essais "Japon" et de 40 à 60 jours pour les essais "AT1". Ainsi l'activité spécifique des solutions soumises aux extractions variait, suivant les cas, de 200 à 950 curies par litre.

Le fait le plus important relevé au cours des essais est l'apparition de précipités abondants se formant et s'accumulant à la surface de séparation des deux liquides (interphase) dans les étages d'extraction du premier cycle. En raison de la petitesse des batteries de mélangeurs-décanteurs utilisées dans les cellules chaudes, ces précipités perturbent le fonctionnement des extracteurs et ont tendance à obstruer les orifices de passage des solutions, risquant ainsi de compromettre l'expérience en cours et même de la paralyser complètement. Ces précipités apparaîtraient certainement moins rapidement dans des batteries industrielles mais ils ne manqueraient pas de créer quand même de graves difficultés aux exploitants. Ils ont d'ailleurs été déjà signalés dans les usines de Marcoule et de Windscale, qui traitent pourtant des combustibles beaucoup moins irradiés.

On a pu continuer les essais et obtenir des facteurs de décontamination acceptables en chassant périodiquement le précipité par vidange brusque des pots encrassés, mais cette méthode, applicable à la rigueur en usine si le phénomène n'est pas trop intense (1), ne peut être recommandée pour une exploitation suivie sur combustibles fortement irradiés. La méthode suivante nous est apparue autrement rationnelle et efficace.

On avait observé que les facteurs de décontamination en ruthénium, en cérium et surtout en zirconium, étaient bien meilleurs quand

---

(1) Elle est effectivement utilisée à l'usine de Marcoule.

les solutions traitées avaient été obtenues en utilisant un peu d'acide fluorhydrique pour accélérer l'attaque des oxydes (1). Cette différence s'expliquant par l'action fortement complexante de l'acide fluorhydrique vis à vis du zirconium, on en vint à envisager l'emploi systématique de cet acide pour améliorer les conditions de l'extraction.

Les précipités d'interphases, en effet, semblent dûs en grande partie aux combinaisons insolubles du zirconium avec les produits de dégradation du TBP (MBP - PO_4H_3), dégradation qui est d'ailleur accélérée par le zirconium lui-même. Ces phosphates de zirconium constituent vraisemblablement l'infrastructure du précipité sur lequel viennent se fixer d'autres produits de fission et des suspensions solides (impuretés insolubles) ou colloïdales (silice). L'accumulation de ces précipités très radioactifs au contact du TBP aggrave encore la décomposition radiolytique de celui-ci, tandis que l'entraînement d'une partie de ces impuretés en phase organique abaisse les facteurs de décontamination. Celui du zirconium, notamment, est très affecté, non seulement par les entraînements, mais par la formation du dibutylphosphate, soluble dans le solvant.

Ainsi le zirconium est apparu comme le principal responsable des difficultés chimiques et hydrauliques rencontrées au cours des extractions. Quand on a ajouté de l'acide fluorhydrique dans la charge ou au lavage (ou dans les deux) ces difficultés ont presque complètement disparu : les précipités ont diminué considérablement et le facteur de décontamination en Zr s'est amélioré de façon spectaculaire.

D'autres points notés au cours de ces essais, quoique moins importants, méritent d'être signalés :

- la filtration des solutions avant extraction diminue notablement le volume des précipités d'interphases ou du moins retarde leur formation. Cette opération ne semble pas déterminante mais elle agit sans conteste dans un sens favorable.

- la forte activité spécifique des solutions se traduit pas un échauffement important qui peut provoquer leur concentration spontanée si elles ne sont pas conservées en vase clos. Ce phénomène, prévisible mais sous-estimé, a quelque peu faussé le démarrage d'un des premiers essais.

- on ne trouve que de faibles proportions de plutonium hexavalent dans les solutions très actives. Il s'en forme donc peu, ou bien il se réduit spontanément sous l'action des rayonnements.

---

(1) Cette précaution, inspirée par des essais sur échantillons inactifs, n'est d'ailleurs pas indispensable : les oxydes irradiés se dissolvent beaucoup plus vite, même sans acide fluorhydrique, que les oxydes non irradiés.

2 - OXYDE UO_2-PuO_2 IRRADIÉ A 40.000 MWj/t

2.1 - Chaîne Cyrano

L'oxyde du réacteur EL3, utilisé pour les essais "Japon" et, faute de mieux, pour l'étude du schéma d'AT1, a été abandonné dès que Rapsodie a pu fournir des aiguilles irradiées à des taux de combustion significatifs. En mai 1968 on a travaillé ainsi sur du combustible à 20.000 MWj/t. Depuis janvier 1969 on peut disposer d'aiguilles irradiées jusqu'à 40.000 et même 50.000 MWj/t.

Malgré l'activité élevée des solutions (400 à 700 curies par litre suivant le temps de désactivation) et un spectre de produits de fission différent (beaucoup plus de ruthénium notamment), les extractions se sont déroulées sans difficulté importante, grâce à la méthode aux ions fluorures. En revanche, c'est aux dissolutions que l'on a vu apparaître des phénomènes inquiétants. Quand on attaque des oxydes à 40.000 MWj/t la dissolution est très rapide (1 à 2 heures, sans HF) mais il reste un dépôt noir relativement abondant. Très fin, difficile à filtrer, cet insoluble contient essentiellement du molybdène, mais aussi d'autres métaux nobles (ruthénium, rhodium, niobium, technétium), du manganèse (provenant des gaines) et beaucoup d'autres éléments en plus faible concentration. Les premiers essais actifs de l'atelier AT1 ont encore mieux mis ces difficultés en évidence.

2.2 - Atelier AT1

L'atelier pilote AT1 a été expérimenté en actif au début de 1969, avec le traitement de 220 aiguilles de Rapsodie, soit 25 kg d'oxyde UO_2-PuO_2 irradié à des taux variant de 150 à 40.000 MWj/t.

Bien que la moyenne n'ait pas dépassé 18.000 MWj/t, on a retrouvé les phénomènes observés dans "Cyrano" et dûs aux fortes concentrations en produits de fission : des produits insolubles (ou reprécipités après dissolution) ont fréquemment colmaté les filtres, imposant des interventions nombreuses et délicates afin d'éviter l'arrêt de l'atelier.

On a également observé une attaque partielle des gaines par l'acide nitrique(1). Cette sensibilisation de l'acier inoxydable au cours du séjour en pile est assez inquiétante car le fer ainsi mis en solution est un agent de corrosion actif pour le dissolveur.

A part les ennuis de filtration et des difficultés analytiques résultant de la forte activité des solutions, les opérations se sont déroulées sans incident notable et le rendement du procédé a été largement supérieur à 99 %.

---

(1) Ce phénomène avait déjà été observé en 1965 dans "Cyrano" sur des aiguilles irradiées en bain de sodium dans EL3. Il avait été attribué au mode de nettoyage des gaines mais il est dû plus vraisemblablement à l'action prolongée du sodium à haute température ou peut-être à l'irradiation neutronique elle-même.

Malgré une activité β initiale atteignant parfois 6 curies par gramme, l'activité résiduaire du produit final a toujours été inférieure à 0,1 microcurie par gramme, ce qui représente un facteur de décontamination global supérieur à 6.10^7 pour les lots les plus actifs. Ces excellents résultats s'expliquent en grande partie par l'efficacité du procédé à l'acide fluorhydrique qui fait "coup double" : d'une part il retient le zirconium en solution aqueuse et d'autre part, en permettant ainsi de travailler en milieu très acide (4 N) il contribue aussi à retenir le ruthénium.

3 - ALLIAGES D'URANIUM TRES ENRICHI

Les alliages UAl des réacteurs de recherche du type "MTR" subissent des taux de combustion de l'ordre de 30 %. Les alliages UZr qui alimentent les moteurs de sous-marins sont encore plus irradiés.

En vue du traitement de ces combustibles, des études ont été faites en laboratoire et en atelier semi-industriel sur des plaques inactives. L'atelier pilote de Marcoule, équipé depuis 1968 pour recevoir les combustibles enrichis(1) est prêt à entreprendre des campagnes expérimentales dès que des essais actifs auront complété ces études mais, en raison des possibilités offertes par l'étranger, ces recherches ne sont pas considérées comme prioritaires en France.

Ces alliages posent d'ailleurs des problèmes techniques et surtout économiques sérieux à la voie aqueuse (dissolution des UZr, manutention et stockage de gros volumes, corrosion, criticité, etc...). En revanche ce sont des combustibles idéaux pour mettre la voie sèche à l'épreuve. Ils sont en effet dépourvus de gaine en acier inoxydable et de plutonium qui tous deux, pour des raisons fort différentes, compliquent l'application du procédé.

La cellule "Attila" a déjà traité plusieurs lots irradiés de ces alliages. L'avant-dernier essai, effectué en janvier 1969, a porté sur plusieurs plaques d'alliage UAl provenant de la pile Pégase de Cadarache, refroidies 100 jours. L'activité βγ de ce combustible s'élevait à 11.000 curies pour 20 g d'uranium. A l'issue du traitement et après décroissance de l'iode 131 et de l'uranium 237, on ne décelait plus dans l'hexafluorure d'uranium récupéré qu'une activité résiduaire d'un microcurie, (soit 0,05 µCi par gramme), ce qui représente un facteur de décontamination de 10^{10}.

Le dernier essai, entrepris au mois de mai, porte sur un élément entier du même réacteur, soit 360 g d'uranium et 75.000 curies de produits de fission. Le dépouillement de l'essai, en cours au moment où l'on rédige cet article, laisse présager des résultats analogues.

---

(1) Cet équipement porte le nom de chaîne EEEP ou "3 EP" : expérimentation d'éléments enrichis au pilote.

Ces excellents résultats démontrent que la plupart des difficultés soulevées par la conjonction de la température, de la forte activité, de produits pulvérulents et de réactifs aussi agressifs que le fluor et l'acide chlorhydrique sont maintenant maîtrisées.

4 - ALLIAGES PLUTONIUM-ALUMINIUM

4.1 - Cibles pour la production d'éléments transplutoniens.

Les cibles d'alliage PuAl destinées à produire des éléments transplutoniens (américium, curium, etc...) sont soumises à des taux de combustion bien supérieurs à ceux de n'importe quel combustible puisqu'on pousse l'irradiation jusqu'à disparition presque totale de toute matière fissile.

Le traitement qu'elles subissent est assez différent de celui que l'on applique aux combustibles classiques, mais il peut donner lieu, surtout dans ses premières phases, à des observations qui intéressent les combustibles très irradiés en général.

C'est ainsi que l'on a pu noter les points suivants :

- L'alliage PuAl se dissout beaucoup plus lentement que la gaine en aluminium dans l'acide nitrique en présence de catalyseurs (Hg^{++} = 0,02 M et F^- = 0,02 M) mais il ne laisse aucun résidu solide.

- La trilaurylamine, utilisée pour un premier cycle d'extraction en milieu nitrique, semble se comporter très bien en présence de fortes activités spécifiques. En particulier, elle ne produit pas de précipités d'interphases.

4.2 - Combustible de Célestin

Les réacteurs tritigènes Célestin fournissent des éléments en alliage PuAl qui ont subi des niveaux d'irradiation élevés. On a étudié un procédé de traitement pour en récupérer le plutonium et, éventuellement, l'américium.

Les études ont suivi la filière habituelle : essais α en boîtes à gants, essais αβγ dans la chaîne "Cyrano" et enfin essais actifs à grande échelle à l'atelier pilote de Marcoule. Les principaux résultats sont les suivants :

a) Dissolutions.

Contrairement à toute attente, la dissolution de ces alliages dans l'acide nitrique s'est révélée relativement aisée, même en présenc de concentrations très basses en nitrate mercurique (10^{-3} à 5.10^{-4} M) et en absence d'acide fluorhydrique. Les résultats obtenus à Fontenay sur petits échantillons ont été assez discordants, probablement à cause des inégalités de flux intégrés, mais à l'atelier pilote, où l'on opérait sur plaques entières, on a observé des vitesses d'attaque plus régulières. Celles-ci sont telles que l'on pourrait même, si c'était nécessaire, se passer complètement de tout catalyseur. Dans ce cas la dissolution durarait 12 à 15 heures au lieu de 8 à 10 en présence de mercure.

b) Extractions

Que l'on opère en présence d'uranium ou non, on obtient au premier cycle des résultats assez semblables dans leurs grandes lignes :

- le rendement d'extraction du plutonium est très bon,

- les facteurs de décontamination sont médiocres.

Ce dernier point peut s'expliquer par un défaut de saturation du solvant (par crainte du Pu VI), mais plus vraisemblablement par l'effet relargant du nitrate d'aluminium. Des facteurs de décontamination tout à fait acceptables sont d'ailleurs atteints sans peine si l'on fait appel, une fois de plus, à l'acide fluorhydrique en faible concentration.

IV - PERSPECTIVES D'AVENIR

Quelle que soit la filière choisie par le CEA et l'EDF pour succéder aux réacteurs graphite-gaz et pour précéder les surgénérateurs à neutrons rapides, il faudra être prêt à traiter des combustibles fortement irradiés : les réacteurs à eau lourde fourniront des oxydes à 10 ou 12.000 MWj/t; avec les réacteurs à eau on atteindre au moins 30 à 40.000 MWj/t; avec les réacteurs à neutrons rapides enfin, on montera sans doute jusqu'à 100.000 MWj/t

Dans tous les cas les combustibles se présenteront sous la forme - nouvelle en France - de faisceaux d'aiguilles d'oxyde et on aura affaire à de très fortes activités spécifiques ainsi qu'à des concentrations élevées en produits de fission. Ces caractéristiques posent des problèmes difficiles qui appellent des solutions inédites.(1)

1 - LES PROBLEMES

On ne mentionne ici que les problèmes qui se poseront à court ou moyen terme, c'est-à-dire pour la voie aqueuse. La voie sèche en ignorera une partie mais retrouvera l'autre, quoique sous une forme différente.

---

(1) Le traitement de ces divers oxydes est envisagé à La Hague, grâce à une extension de l'usine qui permettrait de recevoir ces combustibles, de les découper, de les dissoudre et de les soumettre à un premier cycle d'extraction. C'est le projet "HAO" (Haute Activité Oxydes).

1.1 - La forme des éléments combustibles et la cohésion des oxydes avec leur gaine rendant un dégainage mécanique difficilement praticable, il faut tronçonner les aiguilles, une par une ou par faisceaux entiers. Ensuite il faut dissoudre l'oxyde en présence des morceaux de gaine et assurer l'évacuation de ces derniers, opérations que l'on sait réaliser en discontinu mais que l'on aurait avantage à rendre continues.

1.2 - La forte activité spécifique amplifiera considérablement la dégradation du TBP et la formation des précipités d'interphases. En outre la température des solutions, proportionnelle à leur activité, jouera aussi un rôle défavorable en accélérant les réactions chimiques.

1.3 - Les teneurs élevées en produits de fission créeront une situation nouvelle pour la chimie du retraitement car beaucoup de ces éléments se trouveront à des concentrations se chiffrant en grammes par litre. L'expérience récemment acquise à AT1 a montré le rôle néfaste que peuvent jouer ces impuretés. Pour des taux de combustion plus élevés, il faut s'attendre à les voir provoquer des réactions parasites dont il est difficile de prévoir les effets car la chimie de ces éléments les uns en présence des autres est encore assez mal connue. On peut craindre des précipitations, des formations de complexes (iode stable et TBP, par exemple), des corrosions, peut-être des réactions d'oxydo-réduction, etc...

Les produits de fission gazeux (iode, krypton, tritium) que l'on verra aussi apparaître en quantités importantes susciteront également de nouvelles préoccupations pour les rejets d'effluents.

1.4 - Les combustibles des réacteurs à neutrons rapides présentent toutes ces complications au plus haut degré et, en plus, celles qui résultent de teneurs élevées en plutonium : risques de criticité, importance accrue des rendements en matière fissile, chimie des milieux concentrés en plutonium.

Une autre particularité propre à ces combustibles sera d'exiger des temps de désactivation aussi courts que possible, afin de limiter au maximum la quantité de plutonium à investir dans le cycle du combustible. Cette exigence conduit à des activités spécifiques encore plus fortes et oblige à tenir compte de certains isotopes à vie courte (iode 131, xénon 133, uranium 237) négligés jusqu'ici. L'iode 131, en particulier, risque de s'avérer particulièrement gênant à cause de la facilité avec laquelle il peut revêtir diverses formes chimiques, liée à une grande nocivité.

1.5 - Les combustibles fortement irradiés contiennent des quantités relativement importantes d'éléments transuraniens. Les applications de ces isotopes étant en plein développement, il faut prévoir leur récupération par des procédés susceptibles d'être exploités dans des installations à caractère industriel.

2 - LES SOLUTIONS

Les travaux en cours et l'expérience acquise en laboratoire et en atelier pilote inspirent évidemment un certain nombre de réponses à tous ces problèmes, mais les études ne sont pas encore assez avancées pour que des solutions soient en vue pour chacun d'entre eux.

2.1 - Voie aqueuse

Pour le traitement initial des combustibles (tronçonnage, dissolution) et pour le traitement final du plutonium (précipitation, etc) différentes techniques sont à l'étude en vue de rendre les opérations aussi continues que possible. On vise à mettre au point des appareils capables d'assurer de fortes capacités tout en respectant les exigences de la sécurité nucléaire.

Pour parer aux dommages causes par les fortes activités spécifiques, on poursuit, bien entendu, les travaux sur la complexation du zirconium par l'acide fluorhydrique. Cette méthode a fourni des preuves incontestables de son efficacité mais son emploi exige de grandes précautions : les ions fluorhydriques complexent aussi la plupart des autres cations et notamment le plutonium, d'où le risque de chute du rendement à l'extraction. D'autre part l'acide fluorhydrique est assez corrosif, même aux dilutions préconisées, si l'on dépasse la température de 50 à 60°. En outre, comme il est relativement soluble dans les solvants, on risque de le retrouver dans une partie de l'usine où il est indésirable. Enfin, si l'on doit pratiquer des concentrations par évaporation, sa volatilité est également gênante.

La plupart de ces inconvénients peuvent être évités si on ajoute assez d'aluminium pour complexer l'excès d'ions F^-, mais le jeu des équilibres entre les différents complexes devient alors assez compliqué et, pratiquement, il faut calculer et expérimenter le "mode d'emploi" de la méthode dans chaque cas particulier.

Cette méthode étant encore loin de pouvoir être proposée comme une panacée, on a cherché à limiter les effets de la radiolyse en faisant appel à des appareils d'extraction capables d'assurer à la fois des temps de contact courts et des débits élevés. Ainsi Saint-Gobain Techniques Nouvelles et la Société Robatel ont mis au point un type original d'extracteur centrifuge nucléaire dont un petit modèle a été éprouvé sur uranium à Fontenay-aux-Roses et va être expérimenté en actif à l'atelier pilote de Marcoule.

La plus grosse inconnue pour toutes ces solutions reste le comportement des produits de fission en forte concentration. Les études sur ce chapitre ne font que débuter et un programme important est envisagé : étude des produits de fission "nobles", de l'iode, du tritium, etc...

A côté de ces études de chimie et de génie chimique, il faut signaler les travaux entrepris en vue d'automatiser le contrôle des procédés par l'utilisation d'appareils d'analyse branchés directement sur les circuits de fabrication (contrôle "en ligne"). En préparant l'automatisation complète des opérations, ces études annoncent un véritable renouvellement de la technologie du retraitement.

2.2 - Voie sèche

Toutes les recherches que l'on vient d'évoquer visent à reculer les limites de la voie aqueuse et à la rendre applicable aux combustibles de plus en plus irradiés et de moins en moins refroidis. Parallèlement à cet effort, on poursuit l'étude du procédé de volatilisation, d'une part sur les alliages UAl et UZr, d'autre part sur les oxydes mixtes UO_2-PuO_2.

Il reste à résoudre, dans le cas de ces derniers, certains problèmes posés par l'élimination des gaines en acier inoxydable, la rétention possible de matière fissile dans les "lits fluidisés", la séparation quantitative des hexafluorures d'uranium et de plutonium et la purification finale de ce dernier.

L'avenir de cette technique rencontre encore beaucoup de scepticisme - et particulièrement en France - mais cette méfiance semble tenir moins aux difficultés intrinsèques du procédé qu'à l'avance prise par la voie aqueuse. Incontestablement, la volatilisation devra fournir des preuves solides de sa rentabilité et de sa fiabilité, mais nous pensons que, grâce à ses avantages importants sur le plan de l'économie et de la sécurité, elle finira par s'imposer pour les combustibles à très forte activité spécifique qui sont aussi les plus riches en matière fissile et par conséquent les plus chers.

V - CONCLUSION

Malgré une expérience appréciable sur le traitement chimique des combustibles fortement irradiés, il reste encore au CEA beaucoup à apprendre en ce domaine, donc beaucoup d'études à entreprendre et à mener à bien.

On peut distinguer deux phases dans l'exécution de ce programme. La première est l'expérimentation sur combustibles réels qui est indispensable : en deux ou trois ans d'exploitation de la chaîne "Cyrano" on en a appris beaucoup plus qu'en dix ans de manipulations sur produits non irradiés. Les combustibles à hauts niveaux d'irradiation qui sont maintenant à notre disposition, grâce notamment à Rapsodie, vont donc permettre d'étendre et d'approfondir notre expérience au cours des prochaines années. Ces études, ainsi que l'exploitation du pilote de procédés AT1, ne vont pas seulement contribuer à résoudre les problèmes que l'on entrevoit aujour d'hui, elles vont sans doute en révéler aussi de nouveaux, pour lesquels il faudra également trouver des solutions.

Quel que soit le succès que l'on puisse espérer de ces travaux à petite échelle - AT1, rappelons-le, n'a qu'une capacité d'un kilo par jour - il faudra ensuite extrapoler les résultats aux installations industrielles. Ce passage du laboratoire à l'usine ou, si l'on veut, de la science à la technologie, constituera la deuxième phase de nos recherches. Ce sera la tâche des ingénieurs de génie chimique et de ceux qui exploitent l'atelier pilote de Marcoule.

Pour le procédé de volatilisation, le processus sera sensiblement lè même, à ceci près qu'en raison de la modicité des effectifs, c'est la même équipe qui examinera les deux aspects des problèmes.

D'ailleurs, en pratique et même pour la voie aqueuse, ces deux phases dépendent étroitement l'une de l'autre et c'est par une collaboration constante entre tous les intéressés - auxquels il faut, bien entendu, associer les constructeurs, les futurs exploitants et aussi les économistes - que l'on parviendra à maîtriser tous les problèmes que posent aux chimistes les combustibles fortement irradiés.

REMERCIEMENTS

Les travaux évoqués ci-dessus sont l'oeuvre de plusieurs équipes du Département de Chimie. Les noms des principaux responsables figurent en tête des autres mémoires présentés par la France, à l'exception de ceux du pilote de Marcoule car leurs essais sur combustibles fortement irradiés ne font que commencer. Toutefois, en raison de la contribution capitale qu'ils apportent à l'expérience des Services de Chimie des Combustibles Irradiés, nous tenons à les associer à cette communication et à mentionner particulièrement M. F. NIEZBORALA, chef de Section et ses principaux collaborateurs : MM. A. CALAME-LONGJEAN, R. BONNIAUD, J. LE BOUHELLEC et J. BLACHERE

Status of Work in the United Kingdom

By

B.F. WARNER

Abstract

The paper outlines the Organisation in the U.K.A.E.A. which is concerned with reprocessing, describes the way in which the Second Windscale Plant has been adapted to process high burn-up oxide fuel by the addition of a Head End Plant, and gives design and operational experience in the processing of M.T.R. and Experimental Fast Reactor fuel at Dounreay. It briefly indicates areas in which the major problems of processing Fast Reactor and Advanced Thermal Reactor fuels are likely to be met.

Technical Manager, Windscale Works
U.K.A.E.A.

1. Organisation

The U.K.A.E.A. is the only organisation in the U.K. authorised to engage in the development, design and operation of reprocessing plants. The major reprocessing complex is at Windscale and at D.E.R.E. a small plant processes the fuel from the D.F.R. reactor and from British and overseas M.T.R. reactors.

These two centres carry most of the reprocessing development work, supported by A.E.R.E. in the fields of basic chemistry and chemical engineering studies.

The design work for the plants is carried out by the Chemical Plant Design Office, Risley.

2. Reactor Programme

The U.K. reprocessing plant requirements are dictated mainly by the U.K. reactor programme, but it has proved technically and economically feasible to provide capacity for overseas reprocessing contracts.

It is common experience in all countries that projections of reactor programmes require constant revision as economic and technological changes occur. However, the reprocessing technology must anticipate such variations.

Taking a published national programme, Ref. 1, the U.K. reactor programme could be:

Reactor Type	Generating Capacity MW(e)	Approximate Year
Magnox Reactors	5,000	1970
Dounreay Fast Reactor	60 MW(h)	On Stream
M.T.R. Reactors	-	On Stream
A.G.R. Reactors	8,000	1975
Advanced Thermal Reactors	20,000	1985
Sodium Cooled Fast Reactors	20,000	1985

The Magnox reactors will be complete when Wylfa is brought on stream in 1970, and of the A.G.R. reactors, 5,000 MW(e) have already been sanctioned. (Dungeness B, Hinkley B, Hunterston B and Hartlepools). The

Advanced Thermal Reactors can range from evolutionary types of carbon dioxide cooled A.G.R. employing dispersed fuels (i.e. coated particle fuels in a SiC matrix) to H.T.G.C. types employing helium cooling and dispersed fuels in graphite assemblies.

Existing U.K. Reprocessing Plants

The facilities that are available to date are: (i) the Second Windscale Plant; (ii) The Windscale Head End Plant for Oxide Fuel; (iii) The D.E.R.E. Fast Reactor and M.T.R. Plant. Thus the existing facilities provide capacity for the Magnox, early Advanced Gas Cooled and Steam Generating Heavy Water Reactors, overseas B.W.R. and P.W.R. and the experimental D.F.R. and M.T.R. reactors.

3.1 The Second Windscale Plant

This is the centre of reprocessing operations at Windscale and, originally designed to process 1500 t.p.a. of irradiated natural uranium fuel, it has capacity available for the product streams from the Head End Plant for oxide fuel from A.G.R., S.G.H.W.R., B.W.R., P.F.R. and P.W.R. reactors.

A general outline of the plant and its flow diagram is provided in Refs. 7, 3 and 4. Insofar as this plant was designed for low burn-up fuel and we are discussing the reprocessing of high burn-up fuel, it is sufficient to recall that the complex consists of:

1. Fuel Receipt and Storage Ponds
2. Fuel Decanning Caves
3. Continuous Fumeless Dissolvers
4. Mixer-settler, 3 Cycle, Late - separation, Solvent Extraction Plant
5. UN Solution Evaporators and Thermal Denitrators
6. Pu Evaporators and Storage Plant
7. H.A. Waste Evaporator and Storage Plant
8. M.A. Waste Evaporator and Delay Storage Plant
9. L.A. Effluent Treatment and Storage Plant

The plant has operated since 1964, has given very satisfactory service and has required a minimum of modification to equipment or flowsheet.

The confidence thus established led to the examination of the maximum utilization of this plant for the U.K. advanced gas cooled reactor programme and overseas boiling water and pressurized water reactors.

The conclusions reached were that the fuel transport, receipt and storage pond services designed for Magnox fuel could readily be adapted to accommodate the C.A.G.R. fuel with minimum changes such as suitable spacing grids required to ensure nuclear safety. Long oxide fuel from S.G.H.W., B.W.R. and P.W.R. reactors can be stored in another fuel receipt pond facility already available.

The magnox decanning plant, consisting of 2 identical caves fitted with specialized machinery for end removal, can splitting and can removal, could not be adapted for the very different design of A.G.R. fuels. The continuous dissolvers were unsuitable for operation with low enriched U oxide fuel for a variety of reasons - nuclear safety control, lack of means of removing cladding débris and the available feed mechanisms being among the more important ones. The first cycle of solvent extraction, with long residence time mixer-settlers, would give poor decontamination factors for primary purification of high burn-up fuel and was considered unsuitable. The process would, however, accept C.A.G.R. feed from a primary decontamination cycle and give a satisfactory decontamination. The thermal denitrators would not be required for low enriched fuel as it is prefereble to provide a concentrated U.N. liquor to feed the fuel fabrication cycle at Springfield Works. This can be achieved safely in the existing evaporators. The highly active and medium active waste evaporators are also adaptable to the oxide process.

It was therefore decided to build an oxide head-end plant, to feed a first cycle of extraction, scrub, and backwash existing in the First Windscale Separation Plant which is based on the Butex process, Ref. 5. The processing of the low enriched fuels demanded separate "campaigns" to ensure no loss of separative work on the uranium product.

3.2 The Head End Plant for Oxide Fuel Reprocessing

This has been built in the first separation plant, after it had been decontaminated, unwanted plant removed and structural modifications made to the highly active cells.

The plant now consists of:

1. Shear Cell - containing feed mechanism, fuel element shear and dissolver feed system
2. Decontamination and Maintenance Cell
3. Dissolver Cell - containing 2 batch dissolvers
4. Dissolver Product Accounting Tanks
5. Leached Hull Transfer System and Storage Silo
6. Leached Hull Monitoring System
7. Primary Separation and Product Concentration Cell (based on the Butex process)

It is not proposed to detail the design of plant, but it is relevant to discuss the broad principles and the reasons for their choice in U.K. conditions.

Shear Cell

The choice open to us lay between:

(i) Chopping of complete elements without prior breakdown

(ii) Partial dismantling followed by chopping

(iii) Complete dismantling to single pins and single pin chopping

(iv) Complete dissolution of fuel and cladding

An early assessment of storage costs of the highly active liquor waste arising from total fuel element dissolution ruled out this technique and consideration was then given to the alternative chop-leach routes (i to iii). The size of shear decreases as we move from (i) to (iii) and the latter system makes possible the use of continuous leachers that have been studied in the U.K. and elsewhere.

There is thus a balance to be struck, for each fuel element design, between the multi-stage, complex equipment required for fuel dismantling and feeding to a single pin shear and the comparatively simple feed system of whole elements to a large shear.

In striking this balance, the variety of fuel designs to be fed to the plant is an important factor. Furthermore, possible minor changes in the fuel elements, as a particular design of reactor evolves, could render ineffective the equipment provided for complete dismantling to single pins. Careful evaluation showed that the shearing of whole fuel elements in a large shear, in which the feed envelope and shear pack components could be readily changed to meet a range of element cross-sections, lengths and supporting structures, would ensure that the expected range of C.A.G.R. and S.G.H.W.R. elements could be processed and, importantly, that current designs of B.W.R. and P.W.R. elements were also acceptable.

For these reasons the whole element chopping route was chosen for the first phase of our programme, but it is technically possible to provide fuel breakdown facilities for C.A.G.R. type elements if subsequent experience shows this to be desirable.

Dissolver Cell

The choice of whole element chopping weighed against the use of a continuous leacher owing to the size and variety of end pieces, sheath and grids in the range of fuels contemplated as feed material.

Thus batch leaching was chosen and a dissolver unit designed to accept all the débris from the shear in a large perforated basket. A conventional leaching cycle is used, consisting of heating the feed acid, leaching, liquor transfer and basket washing.

The nuclear safety of the unit was ensured by special design features, which ensured freedom from restrictive mass control. The dissolver product liquor is transferred to two storage tanks, nuclearly safe by concentration.

Solvent Extraction Cycle

This consists of forward extraction, scrubbing and backwashing in packed columns, followed by steam stripping of the product liquor and continuous evaporation. The solvent used is 'Butex' ($\beta\beta'$ dibutoxy-diethyl ether) as used in the first Windscale Primary Separation Process. The choice of this solvent was primarily dictated by the availability of plant designed for its use and 12 years operational experience with natural uranium fuels. The acceptance of this first-cycle substantially reduced the investment in plant and in R. & D. work.

Because 'Butex', when thermally or radiolytically degraded does not produce significant levels of complexing agents which could lead to losses of Pu or U, its use with high burn-up fuels is particularly suitable. However, it does have one demerit, in that it gives a low decontamination factor for Ru. Insofar as U and Pu product quality is concerned, this is not important if the product is subsequently fed to a 3-cycle TBP process.

The activity of the salt-bearing solvent wash is however, higher than it would be with a TBP cycle and this demands storage and effluent treatment before final disposal.

Processing of Head End Plant Product Through the Second Windscale Reprocessing Plant

The product from the first (Butex) cycle, after concentration, has uranium and plutonium concentrations which are in the range universally accepted as feed for a tri-butyl phosphate process i.e. 200-350 gU/litre, the Pu content depending on the fuel processed, but in the range of 1 g/litre to 3.5 g/litre. The feed activity has been reduced by the elimination of all fission products other than Ru, Zr, and Nb and these are at greatly reduced concentrations. Thus the performance required of the TBP process is considerably reduced and this permits a wider variation in the concentration of uranium and Pu in the solvent without incurring a penalty on product quality. Utilizing this benefit, only minor modifications to the standard flowsheet are required and criticality control is based on concentration limitation in the same way as for Magnox processing.

Highly Active Effluent Evaporation and Storage

The highly active raffinate from the 1st Butex cycle will be concentrated in the kettle evaporators provided for the 1st Separation plant, further concentrated in new evaporators and sent to permanent storage as concentrated fission product nitrates in standard tanks where they will be mixed with wastes from the H.A. magnox reprocessing campaigns. The wastes from the TBP cycle will be concentrated in new evaporators and directed to H.A. waste storage whilst the medium active raffinates are stored, floc treated and discharged in the normal way.

Aerial Effluents

The only new problem in this area is the treatment of air from the chop-leach cell and this has been designed to ensure that air from the shear and dissolver is kept separate from cell air and can therefore be treated by scrubbers and absolute filters.

Status of the Head End Plant

The plant is virtually complete and inactive commissioning of the mechanical and chemical equipment is well advanced. Active operation is planned for mid-summer of this year.

3.3 Reprocessing of Irradiated Fuels from Material Testing Reactors

A small plant for the U.K. and overseas M.T.R.s was built at D.E.R.E. and was brought on stream in 1958.

The facility permits the following operations to be carried out:

After irradiation, the elements are stored for a period of 120 days at the reactor sites to allow the short-lived fission products and U236 to decay. Appendages at the ends of the elements are removed before transport in a shielded container to the M.T.R. Chemical Separation Plant at Dounreay. The irradiated elements are there discharged into a pond for breakdown and feed to dissolution, followed by a two-cycle countercurrent solvent extraction process, to separate the uranium from the fission products and small amounts of plutonium. The uranyl nitrate product is then pumped to the Billet Production Plant, where ammonium diuranate is precipitated, and then converted through fluoride and a reduction operation to uranium ingots which are recycled to fuel element manufacture. The highly active fission product from the first cycle is permanently stored in underground tanks in the Highly Active Storage Plant. The raffinate from the second cycle can be either evaporated and stored, or passed to effluent tanks for disposal to sea after treatment. All other low active effluents are collected at the effluent tanks and are discharged to sea after analysis.

Process and Plant Description

The fuel plates consist of sandwiches of enriched uranium aluminium alloy between two thin aluminium sheets and the fuel elements comprise a number of these plates brazed together to aluminium side spacers. On receipt at the pond the shielded container holding 25 elements in separate compartments, is placed in position for discharge with the fuel elements horizontal. The elements are then discharged into the pond by pushing them from their individual compartments. Criticality control is achieved in the breakdown pond by mass limitation. A channel key system limits the number of elements which can be discharged from the container into the pond. Underwater manipulators are used to pick up each element, place and clamp it in position on the milling machine table, with the brazed aluminium side spacers in a vertical position. The table is then moved hydraulically, forcing the element between the faces of two fixed milling cutters to remove the side spacers. The plates can then be picked up separately. More aluminium is removed by cropping and each plate is then coiled, raised in a single bucket elevator, and fed down a chute into a dissolver.

Dissolution in nitric acid is carried out batchwise under boiling atmospheric conditions in a mass limited, steam jacketed dissolver fitted with a reflux condenser. Mercuric nitrate is added as a catalyst. The dissolver is criticality cleared for double batching, and interlocks on the elevator and dissolver seal plug ensure that only a fixed number of coiled plates can be fed at any one time. After each dissolution is complete the U_{235} content of the liquor is compared with that anticipated from the irradiation history of the fuel. The dissolver solution is transferred by vacuum to a conditioner vessel, where it is cooled and the acidity adjusted by the addition of nitric acid. The conditioned solution containing the fission products and a few grams of uranium per litre, is passed to a constant volume feeder through a vacuum transfer system. This feeder, of a similar type to that used in the first plant at Windscale; delivers the active solution at a steady rate to the first extraction cycle.

The subsequent countercurrent solvent extraction operations are carried out in horizontal mixer settler contactors. Mixing is by mechanical agitators. The contactors are operated in the non-flooded condition with the solvent phase flowing over weirs into the mixing chambers and aqueous and mixed phases entering through submerged baffled ports. By control of the interface in the last settler of each contactor the interfaces in the settlers of all other stages are fixed. The contactors are designed were criticality cleared on the basis of a concentrated limited system, the U_{235} concentration being maintained below the safe "infinite sea" concentration. It is now known that these contactors are "safe" to much higher concentrations.

The process control of the plant is in general by infrequent sampling of raffinate and extract streams. At the time of design, in-line analysis for uranium was not sufficiently developed to justify its inclusion in a plant of relatively low throughput.

In the first cycle the uranium and plutonium are extracted into a solution of 5% TBP in odourless kerosene. This low TBP concentration was chosen to ensure a reasonable solvent to aqueous ratio and because it was found that with this concentration the ratio of fission products to uranium extracting into the solvent is a minimum. The aqueous raffinate retains the bulk of the fission products and flows to the Highly Active Storage Plant without volume reduction. The solvent extract is stripped with an aluminium nitrate/nitric acid solution to improve fission product decontamination and finally the uranium and plutonium are backwashed from the solvent into a dilute nitric acid solution. A decontamination factor of 1×10^4 for fission products is obtained in the first cycle. The aqueous product from the first cycle is fed to a mechanically stirred conditioner, where its acidity is raised with strong nitric acid and the plutonium reduced to the less extractable trivalent form by the addition of ferrous sulphamate. The conditioned liquor is then fed to the second cycle extraction strip and backwash section by means of a piston displacement constant volume feeder. The solvent used in this cycle is again 5% TBP odourless kerosene. The medium active aqueous raffinate from this cycle containing the plutonium flows to effluent treatment. The product solution containing less than 200 ppm impurities and trace fission products is pumped to the storage section of the Billet Production Plant. The overall decontamination factor for activity over both cycles is 2×10^7.

Originally, the solvent from the first and second cycle was combined and washed into two Holley Mott mixer settlers. In the first the solvent is washed with sodium hydroxide and in the second a 0.1N nitric acid is used. The aqueous raffinates from these washes flow to low active effluent treatment. The solvent is re-cycled through a filter and flow controllers to the extractors. The product liquor from the Separation Plant is fed to geometrically safe continuous evaporators, where a uranium concentration of 200 g/l is achieved. The concentrated uranyl nitrate is then passed to a storage and blending section, from where it is fed batchwise to a precipitation cabinet. Ammonium diuranate is precipitated with hydroxide and allowed to settle. The supernatant liquor is then decanted, and the slurry run into a tray for further settling before final decantation of residual liquor. Thereafter criticality control is by batch limitation through the main process line.

The highly active first cycle aqueous raffinate contains the bulk of the fission products and the aluminium from the alloyed fuel plates. Only a small evaporation factor would be possible on this solution due to its high salt content and because of the relatively small volume arising, this raffinate is routed through a low level active duct to the underground highly active storage tanks. The remaining medium/low active effluents are not segregated from each other and following neutralisation these relatively small volume arisings are sent to holding tanks for sampling and bulk discharge to sea, well within the permitted site discharge formulae.

Operational Experience

Operation of the machines in the breakdown pond has been very successful. Difficulties have been experienced with the occasional badly crushed fuel element, where side spacers are not completely removed in the milling operation. In these circumstances plate separation is achieved by using remote chisels and although this can be time consuming, the infrequency of this operation does not warrant the installation of elaborate equipment to cope with these particular cases. Aluminium swarf and scrap are collected in a flask in the pond and transferred to permanent solid wast storage. Good housekeeping ensures that if any plate breaks during the coiling operation, all pieces are recovered for feeding to the dissolver. The dissolver feed bucket elevator has given no trouble and a γ monitor installed at the top of the dissolver chute has been useful in indicating any small amounts of active material held up on the chute. After each campaign the pond is cleaned down and emptied with strict control of personnel radiation exposure and spread of contamination. The equipment is then checked and made ready for the next campaign.

During active operations trouble was experienced at higher throughput rates with incipient flooding in the first extraction cycle contactors. This was found to be due to solids accumulation and back pressure from the stirring operation in a mixing compartment impeding the flow of the viscous active feed liquor through a pipe connecting the extraction and strip contactor boxes. About the same time, inactive corrosion information indicated that the attack on the active dissolver might be significant. It was decided therefore to modify the standby highly active cells to eliminate these two problems. A new titanium dissolver was subsequently installed in this cell and modification to improve liquor flow were made to the extraction equipment. This standby line has now been in use for some time and has proved capable of a higher throughput than the original plant design. One other modification carried out has been the complete separation of the first and second cycle solvent treatment. This was found necessary because of high retention of zirconium and ruthenium in the first cycle solvent arising from the processing of higher burn-up fuel. Two additional Holley Mott mixer-settlers were fitted and means of heating all four Holley Motts was added. This modification has considerably improved the solvent treatment.

Further progress has been made in achieving a higher operational efficiency for M.T.R. fuels in that the dissolver product can now be fed to the Dounreay Fast Reactor Reprocessing Plant (vide infra) with some minor flowsheet modifications to match the process and plant. The M.T.R. fuel is processed in separate campaigns. This has enabled a reduction in operational and maintenance labour to be made.

3.4 Reprocessing Irradiated Fuel from the Experimental Fast Reactor

The Dounreay Fast Reactor, fuelled with enriched U/Mo alloy, was provided with its own small reprocessing plant to permit the recycle of unburnt U_{235} and to export the Pu to Windscale. The following description refers to the plant as it was originally designed.

After discharge from the reactor the elements are stored for 100-120 days to allow the short-lived fission products to decay and are then transferred individually in shielded containers from the reactor cooling pond to the breakdown cave in the Fast Reactor Chemical Separation Plant. Breakdown of the elements is followed by dissolution and a four-cycle counter current solvent extraction process, which separates the uranium, the plutonium and the fission products. The uranium product is pumped in the Billet Production Plant for conversion to metal. The plutonium product is passed to an evaporation section for concentration, and then transported to the Plutonium Finishing Plant at the Windscale Works. The fission product solutions from the first and second cycles are passed to the Highly Active Evaporation and Storage Plant for volume reduction and permanent storage. Low active effluents are sampled for activity at the effluent tanks before discharge to sea.

Process and Plant Description

The experimental fast reactor element is of the hollow type. Annular pieces of enriched uranium and natural uranium are contained between an inner vanadium tube and an outer niobium tube and the top and bottom section: are of stainless steel. The gap between the fuel and the can is filled with sodium, and at the top of the element there is an expansion space with breathing holes to the outside of the element.

The irradiated fuel is placed in a can with metallic lead. This is heated to melt the lead and it is then allowed to cool. The elements in these cans are then stored in a pond. The lead has intimate contact with the element and serves as a heat transfer medium to dissipate the fission product heat and at the same time prevents the sodium coming in contact with the pond water. One element at a time is removed from the cooling pond in a shielded container to the Fast Reactor Chemical Separation Plant.

The can containing the irradiated fuel element is lowered from the shielded container into a vertical furnace in the breakdown cave. The cave has concrete biological shielding walls in which are set zinc bromide viewing windows on the operating face. Near each window there is a pair of master slave manipulators and the whole cave is served by a remotely-operated ½ ton (.5 tonne) crane. The can top is removed by a remotely-operated cutting machine on top of the furnace, the lead is then melted and the element withdrawn from the can using the crane. The element is then placed in a sealed tube and replaced in the furnace, where the tube is purged with argon, heated and subjected to vacuum. Any lead-sodium alloy or analloyed sodium is thereby drawn out of the element through the breathing holes in the outer can. The element is then withdrawn from the sealed tube after cooling, and is in a suitable condition for breakdown in an air atmosphere. The removal of the sodium is a precaution against the possibility of a uranium fire. The element is then placed in a machine where the stainless steel ends are sawn off. The niobium outer can is "peeled" off by passing the fuel element through a stripping head which contains three symmetrically-placed cutting wheels, backed up by ploughs. The natural uranium is then sheared off in a simple hydraulic shear machine. The enriched uranium pieces on the vanadium inner tube are then passed to a hydraulic press, where the pieces are cracked away from the tube. The enriched uranium pieces are then weighed, and fed by means of a bucket conveyor, to the dissolver. The natural uranium is then cracked off the inner tube, placed in a steel can, collected in a shielded container, and transported to the Windscale Works for plutonium recovery. Scrap is removed from the cave into shielded containers and transferred to active solid waste storage.

Dissolution in nitric acid is carried out continuously in a steam heated recirculating tube dissolver fitted with a reflux condenser. Pieces of uranium are charged at fixed intervals and the nitric acid is fed continuously. Criticality control in the dissolver is achieved by mass limitation.

The dissolver solution flows first through two air-stirred conditioning vessels, where acidity and plutonium valency can be adjusted, through a centrifuge, sampler, and finally to a constant volume feeder, which meters the active feed to the first extraction cycle. The conditioners, centrifugeand constant volume feeder have been designed on a safe-by-geometry basis.

The solvent extraction process is carried out in in-line air pulsed counter-current mixer settler contactors. These contactors have been designed so that they can be considered as infinite cylinders of 13 $in.^2$ (83.9 cm^2) cross-sectional area, and are positioned on a 2 ft. 6 in. (76.2 cm) minimum dimension rectangular lattice. In this array, they are safe for concentrations of 2,000 g. U_{235}/litre. In this first cycle, the uranium and plutonium are extracted into a solution of 20% RBP in odourless kerosene. The aqueous raffinate retains the bulk of the fission products and flows to the Highly Active Evaporation and Storage Plant. The solvent extract is stripped with nitric acid, to improve fission product decontamination and the uranium and plutonium are then backwashed from the solvent with nitric acid.

The aqueous extract, containing uranium and plutonium from the first cycle, flows through a conditioner, where the acidity is adjusted and then passes to the second cycle for further removal of fission products. The aqueous raffinate containing fission products flows to the Highly Active Evaporation and Storage Plant. The acidity of the aqueous extract, containing the uranium and plutonium from the second cycle, is then adjusted in a conditioner before passing to the third extraction and strip operation. The aqueous raffinate from this section passes to the effluent tanks for discharge to sea, and the solvent, loaded with plutonium and uranium, passes to the "splitter" box, where the plutonium is reduced to the inextricable trivalent state, and passes into the aqueous phase, the uranium remaining in the solvent. The uranium is then backwashed from the solvent with nitric acid and is then pumped to the Billet Production Plant. The aqueous solution containing plutonium from the third cycle then passes to a conditioner, where it is converted to Pu(IV) by treatment with sodium nitrite, and flows to the fourth cycle, where it is freed from iron, and the last traces of fission products. The plutonium solution in nitric acid is then pumped to a geometrically safe continuous glass evaporator for concentration and is then transferred to the Plutonium Finishing Plant at Windscale Works, for conversion to metal.

The uranyl nitrate solution from the third cycle is processed to metal in the Billet Production Plant, as already described in Section III, and the metal then is sent to the Fast Reactor Fuel Fabrication Plant.

There are two solvent treatment processes. Washing of the first cycle solvent is carried out in four horizontal air pulsed mixer settlers. The washes in these boxes are sodium carbonate, nitric acid, sodium carbonate and nitric acid respectively. The aqueous waste is combined, acidified, and passed to effluent tanks. The combined second, third and fourth cycle solvents are treated in two similar mixer settlers being first washed with sodium carbonate, and then nitric acid solution. The aqueous waste passes to effluent tanks for discharge to sea. The aqueous raffinates from the first and second cycles flow through pipes in an underground duct to the Highly Active Evaporation and Storage Plant. This plant is constructed to the same standards as the Evaporation Plant at Windscale, already described in Section II.

Operational Experience

As originally designed and installed, the operations in the breakdown cave, after lead melting and element withdrawal, were carried out in a water tank to preclude any possibility of a uranium fire initiated by the presence of sodium. During inactive trials it was found that some remote operations were difficult to carry out in the water tank and it was decided to install the sodium removal process (described earlier), eliminate the water tank and carry out these operations on a stainless steel bench in an air atmosphere. Operation of the breakdown cave under active conditions has been generally satisfactory. The operation of the continuous dissolver has given no trouble apart from occasional surges which cause variation in the uranium concentration of the feed solution. Additional buffer storage has been added to reduce this effect.

Some fuel of a new composition has been used in the Fast Reactor and this has necessitated some alterations to the process. The new fuel has a high molybdenum content and to prevent precipitation of molybdenum compounds during dissolution a batch dissolving process is required. It was decided, therefore, to install a titanium batch dissolver in one of the spare dissolver cells. This is of the slab type steam heated and fitted with a reflux condenser, and its operation has proved successful.

The most time consuming operation in the breakdown cave is the removal of uranium from the vanadium inner tube. Vanadium must be removed from the fuel to prevent accelerated corrosion of the stainless steel dissolver. The use of titanium for the new batch dissolver allows the vanadium tubes to be fed to the dissolving process eliminating the need for this fuel preparation step. This plant, like the Material Testing Reactor Separation Plant, depends on process sampling for its control.

The in-line pulsed mixer-settlers in the solvent extraction process present no operational difficulties, This equipment can be arranged with economy in building space and all the associated moving parts requiring maintenance can be placed in easily-accessible positions in the amber area.

In the original installation, two monitors were positioned in the 2nd and 3rd cycle raffinate lines, to detect any loss of uranium from the plant. These could only detect 0.1 g U_{235}/l., and as a result small quantities of fissile material could be lost. Later two γ sbsorptiometers were installed to show any trend of variation in the concentration of uranium in the solvent streams. These give a few hours warning which allows operational changes to be made before any loss to the raffinate can occur. Raffinate holding tanks were also installed to allow recycle to the plant if desired.

The operational experience of the chemical process has been eminently satisfactory and has been outlined by Allardice, Ref. 6. Most of this experience has been gained when processing U-Mo alloy fuel when, to prevent the precipitation of Mo at the dissolution stage, the feed solution is adjusted to about 1M in Fe^{+++}.

The overall decontamination factors achieved, Ref. 6, are somewhat better than those predicted from development work, e.g. the Cycle 1 DF_{γ} ranges from 1-4 x 10^3 and, in contrast to general experience in TBP systems, the DF for the first cycle is not strongly dependent on feed activity. As pointed out in Ref. 6, this could be due to the competitive complexing of DBP by iron. As found on the Windscale plant, a fall-off in DF_{γ} in the first cycle is compensated for to some extent by improvement in the second cycle.

4. The Future Programme Requirements

4.1 The Fast Reactor Programme

The nominal programme predicts that 20,000 MW(e) of Fast Reactors will be installed by about 1985.

At equilibrium such a programme would demand the reprocessing of about 450 tes per annum of mixed oxide or carbide fuel of which about 300 tes is from the core and axial breeder and 150 tes from the radial breeder. (These figures are given to illustrate the reprocessing problem and do not reflect any particular reactor design paramenters). The annual turn round of Pu is about 30 tes.

The reprocessing of such large quantities of valuable fissile material, demands special consideration of plant reliability. Because the supply of fissile material is a limiting factor in the number of fast reactors that can be built, and because of its consequent high economic value, the inventory of Pu in the fuel cycle must be minimised and a heavy premium can be paid for short cooling. But at the same time, because it is uneconomic to hold large reserves of Pu, the fuel reprocessing and refabrication plants must guarantee the return of fuel to the reactor system. The failure of either one of these facilities would have a serious effect on the national economy.

It is therefore of paramount importance that plants should give high utilization factors and have adequate standby capacity at all times. Consideration of this nature will need to be taken into account when the question of siting, plant duplication and technological suitability are made.

The economy of the fuel recycle will be greatly affected by the losses of Pu to solid and liquid wastes and the former will provide the greater challenge to the process designer.

The U.K. Fast Reactor Reprocessing development programme is at present under consideration and technical assessments are being made in the following areas:

(i) Fuel Transport
(ii) Fuel Breakdown
(iii) Reprocessing Routes - Solvent Extraction, Pyrometallurgical and Fluoride Volatility
(iv) H.A. Waste Storage
(v) Liquid and Aerial Effluent Treatments

It is hoped that, when complete, these assessments will allow the initial development programme to be concentrated on the currect lines for the first generation plants but it is recognized that a succession of plants will be required to meet the oorecast rise in nuclear power and that this will give the opportunity for advanced technology to be introduced if this can be shown to be desirable for reasons of reliability and economy.

The solvent extraction technology is at present being studied as a "reference" process against which the others will be judged.

The work is not sufficiently advanced for definitive conclusions to be reached, but it can be said that assessment is showing that, providing certain conditions can be met, solvent extraction would appear to be a viable route. It is already clear that the major problems for a solvent process will lie in the following fields:

(i) Fuel Transport
Reliable containment and cooling even in accident condition

(ii) Fuel Breakdown

(iii) Fuel Dissolution - the need for high throughput nuclearly safe equipment

(iv) Solvent Extraction - suitable short residence time contactors of high reliability

(v) Iodine suppression or removal

(vi) U/Pu separation system compatible with waste disposal techniques

(vii) H.A. Waste - Evaporation and permanent Storage

These major items will require study for both oxide and carbide fuels and must take into account the possible evolution of fuel element design.

4.2 The Advanced Gas Cooled Reactor Programme

The current design of A.G.R. will not pose exceptional problems in the reprocessing field and it can confidently be predicted that the principles of a successful process can now be set down.

However, to achieve minimum capital and operating costs, evaluation will be made of various fuel breakdown routes and the Head End Process will be optimized for maximum utilization of existing plant. A new reprocessing facility will be required in the early 1980s when the capacity of the existing 2nd Separation Plant at Windscale will be exceeded.

This new plant may well have to deal with a mixed feed of oxide/S.S. clad fuel and coated particle fuel, in either SiC or graphite matrices. An attractive concept would be Head End facilities for each category of fuel, followed by a common reprocessing plant, designed to facilitate segregation of enrichment values.

The major problem of such a complex will be associated with the breakdown of coated particle fuel and possible methods already referred to in the literature are:

(i) Grind - Leach - Filtration

(ii) Burn - Grind - Leach

(iii) Chemical Attack

When the R. & D. programme is launched, all three of these routes, together with others being assessed, will be evaluated to narrow the field. Meanwhile, only limited amount of work is proceeding in this field.

References

1. ATOM, U.K.A.E.A. Publication No. 138/April, 1968.
2. Int. Conf. Peaceful Uses of Atomic Energy 10, 224 (1965).
3. Anglo-Japanese Nuclear Power Symposium, Tokio Paper 9 Session 4, 1963.
4. Kerntechnik June, 1967.
5. Int. Conf. on Peaceful Uses of Atomic Energy Vol. 17, 1958.
6. Kjeller Report - Reprocessing of Fuel from Present and Future Reactors, 1967 p.394.

STATUS REPORT ON FUEL REPROCESSING EXPERIENCE AND REVIEW OF PROGRAMME IN INDIA

N. Srinivasan , India

Abstract.

Experience in reprocessing natural uranium metallic fuel from a heavy water moderator research reactor has been gained in a demonstration plant at Trombay. A 500 kilogram per day plant for reprocessing BWR and Candu type fuels is under construction. A demonstration reprocessing plant for fast reactor fuel is planned. Development work on a modest scale is in progress on direct chlorination volatility process, recovery of neptunium from power reactor fuel, use of trilauryl amine for solvent extraction of plutonium, investigations on suitable partition agents and separation of uranium 233 from irradiated thorium and thorium oxide.

The fuel reprocessing programme in India is developing in stages. The first demonstration plant was set up in Trombay to reprocess the metallic uranium fuel irradiated in the CIRUS, a 40 MW heavy water moderated research reactor. This plant has been in operation since 1965(1). With the setting up of the power stations at Tarapur and Ranapratapsagar, a plant is under construction for the reprocessing of BWR type fuel from the Tarapur Power Station and the CANDU type fuel from the Ranapratapsagar Power Station. The third power station is under construction at Kalpakkam near Madras based on CANDU design. The Indian nuclear power programme also includes the setting up of a fast breeder test reactor at Kalpakkam. A reprocessing complex for the irradiated fuel from the CANDU type power station as well as the fast breeder test reactor is planned for construction at Kalpakkam.

The approach to the reprocessing of irradiated fuel from power reactors(2) is conditioned by the urgent need for plutonium for the fast reactor programme, the variation in capital investment and operating costs of reprocessing plants compared with more advanced countries and the problems involved in transporting large quantities of radioactive material over long distances in the country in the background of the development of rail and road transport.

..The scope

---

*Head, Fuel Reprocessing Division, Bhabha Atomic Research Centre, Trombay, Bombay-85 AS

The scope for the sizing and siting of reprocessing plants extends from small plants attached to each power station to a large scale central plant catering to many power stations. It is not always found feasible to have package plants in every reactor location on account of the limitations associated with the capacity of the environments to accept discharge of liquid and gaseous wastes from reprocessing plants in addition to those generated from the nuclear power stations. While India has a fairly extensive railway net work the existence of two different gauges of railways and the already heavy goods and passenger traffic on the existing railway lines impose limitations for rail transport of irradiated fuels in some sectors. Roadways are not uniformly developed all over the country and in each instance a decision has to be taken about the feasible mode of transport. These factors coupled with the longterm nature of the decisions regarding the locations of future power station preclude the possibility of a large size central reprocessing plant. The compromise of setting up regional reprocessing plants near suitable nuclear power stations appears to be the solution at least for the present, transporting irradiated fuel from nearby nuclear power stations wherever transportation of irradiated fuel by road or rail is safe and feasible.

In the context of the economics of setting up of reprocessing plants in India the influence of size is not significant above 1 tonne per day capacity, according to present day prices and skilled labour costs. The capital investment for an aqueous reprocessing plant follows the approximate relation Rs. 75 x 10^6(MT/day)$^{0.4}$ (Rs. 7.50 = $1). Cost of reprocessing one kg uranium in India follows approximately the relation Rs. 66 (MT/day)^x 'x' being nearer minus 0.6 below 1 MT/day and nearer minus 0.45 above 1 MT/day. Incidence of fuel reprocessing costs on power costs in India decreases rapidly from 0.45 /Kwh to 0.17 p/Kwh when the capacity is increased from 100 kg to 500 kg per day. Thereafter the decrease is marginal: 0.12 p/Kwh for a 1 tonne a day plant and ~~0.66~~ 0.066 p/Kwh for a 5 tonne a day plant.

The initial slow pace of development of nuclear power, the setting up of our first few nuclear power stations in locations far apart over a vast country like India and the necessity for

..setting

setting up regional processing plants do not permit to avail of full load factor in the earlier part of the life of the plant. The object essentially is to ensure that all plutonium produced in nuclear power stations is recovered as quickly as possible. The regional reprocessing plants are sized in a fashion that they can absorb the load from nuclear power stations in the region as and when they are set up. For instance the Tarapur Reprocessing plant has been designed for a capacity of half a tonne uranium per day though the minimum load available is from the Tarapur boiling water power station (25 tonnes a year) and the two units of the Ranapratapsagar power station (50 tonnes a year). This plant can very likely absorb additional load from another CANDU type 400 MWe station in a location from where transportation of fuel should be feasible. By the present analysis, transportation to this plant should be feasible from a power station accessible by road from a railhead in Central or Northern India. Similarly transportation of irradiated fuel should be possible from many of the southern parts of the country to the Fuel Reprocessing Plant proposed to be set up at Kalpakkam near Madras. Between these two reprocessing plants fuel from nuclear power stations of the CANDU type upto a total of 2,000 MWe installed capacity can be processed.

The research and development programme in fuel reprocessing has been on a rather modest scale. Apart from collection of equilibrium data and stagewise separation information pertaining to the co-extraction of uranium and plutonium from fuel solution obtained from BWR(3) and CANDU type irradiated fuel, the work so far carried out and in progress includes investigations on the oxidative decladding of zircaloy clad uranium oxide fuel elements(4), the preparation ~~of~~ and the use of uranous nitrate for the partition of plutonium from uranium(5), the use of TLA for extraction of plutonium(6), the recovery of neptunium from irradiated fuel solutions(7) and the direct chlorination volatility separation of uranium and thorium on the one hand and uranium and plutonium on

...the other

the other from their oxide mixtures(8). In many of these areas extensive information is available in literature and our work was in the nature of confirmation of available data.

Laboratory scale investigations on chloride volatility process have been carried out with sintered UO_2 ThO_2 pellets both unirradiated and irradiated. The procedure involves chlorination of the mixture (after oxidising uranium dioxide to U_3O_8) ~~and chlorination~~ with a mixture of chlorine, carbon tetra chloride vapor and nitrogen in the ratio of 4:1:1 at 700 to 750°C. The chloride vapours volatilising out of the chlorination zone pass through an alumina bed at 300 to 350°C followed by another alumina bed at 200°C and finally on to a sodium chloride bed at 250 to 300°C. Thorium chloride was absorbed in the first alumina bed and uranium chloride in the sodium chloride bed. Separation factors obtained after the primary separation procedure were 25 for uranium in thorium and 5000 for thorium in uranium. Fission product behaviour was also investigated with simulated mixtures as well as irradiated pieces. Cerium and ruthenium chlorides were held in the first alumina bed and zirconium, molybdenum and niobium chlorides reached the sodium chloride bed. Only zirconium chloride was absorbed on the sodium chloride bed at 250°C but at 300°C more than half escaped absorption. Protoactinium chloride was held quantitatively in the sodium chloride bed. The decontamination factors obtained were encouraging.

In similar experiments carried out with UO_2-PuO_2, the little amount of plutonium chloride formed was retained in the alumina bed and separation factors of 2000 for plutonium in uranium were obtained. Recovery and purification of plutonium by chlorination was not attempted.

The investigations on the recovery of neptunium in in Purex process included the effect of acidity and nitrite concentration in the feed and the distribution of neptunium IV and neptunium VI as a function of saturation of the solvent by uranium. Data collected on the movement of neptunium in the reprocessing of research reactor metallic uranium fuel at the Trombay Plant indicated that at 3 molar acidity of the

....feed

feed neptunium follows uranium and plutonium almost quantitatively and at the partition stage using ferrous sulphamate, very little neptunium follows the plutonium. Further investigations in this area are directed towards the possibility of quantitative carry over of the neptunium to the third uranium cycle and isolation of the neptunium in the third cycle raffinate the TBP process and subsequent purification and recovery of the neptunium by ion exchange methods.

In the experiments on the dissolution of unirradiated sintered plutonium oxide, dissolution of the pellet powdered to minus 200 mesh in boiling 13M HNO_3 - 0.04 M HF was attempted. Dissolution rate was negligible after 4 hours. By removal of the plutonium solution and addition of fresh acid every four hours dissolution can be completed in 16-20 hours yielding a solution of 60 g plutonium/litre.

The studies on the oxidation of zircaloy included the influence of moisture and temperature on the time for completion of the oxidation. In the oxidation of sintered pellets of UO_2 to U_3O_8 the optimum temperature was found to be 500°C, the reaction being slower at lower or higher temperatures.

Investigations on trilauryl amine as an extraction agent for plutonium generally confirmed the published information. The aliphatic "Shellsol T" and xylene were used as diluents. With an aqueous phase acidity of 2M HNO_3 and 20% TLA, Kd values of 700 and 300 respectively were obtained. Limiting concentration of 5 g Pu/l in the organic phase was obtained with Shellsol T as diluent whereas with 27 g Pu/l in the organic phase with xylene as diluent no third phase formation was noticed. Stripping with acetic acid or sulphuric-nitric acid mixtures was quite simple.

In the continuous precipitation of plutonium oxalate from acetic acid-nitric acid or sulphuric-nitric acid medium, more than 99 % recovery was obtained with throughputs of 180 and 600 g

...Pu/hr

Pu/hr in a 6 cm diameter precipitation column (height between slurry outlet and supernatant outlet 25 cm). The carryover of precipitate in the supernatant was less than 1 % with the lower throughput but increased to 50 % with the higher throughput of 600 g Pu/hr. The precipitate is washed in another column and the washed product is withdrawn as a slurry with 60 % solids.

Some investigations on the radiolytic and thermal damage of TBP in aliphatic diluent are also in progress.

Detailed investigations on a dilute TBP process for the separation of uranium 233 from irradiated thorium have led to the design of a small semi-pilot plant for the recovery of uranium 233 from irradiated thorium and thorium oxide. This semi-pilot plant will be erected shortly.

Among the development projects planned for the immediate future are studies on the separation of transplutonium elements and on the reprocessing of plutonium based molten salt reactor fuel.

Considerable attention is being paid to the analytical methods of interest to fuel reprocessing. Work is in progress on in-line measurement of uranium (colorimetry) plutonium (neutron counting) and fission products (gamma spectrometry).

Acknowledgement

The development programme reported is an interdivisional collaborative effort of the Radiochemistry Division and the Fuel Reprocessing Division of the Bhabha Atomic Research Centre at Trombay.

....References

References

1. H.N. Sethna and N. Srinivasan, "Operating experience with the Fuel Reprocessing Plant at Trombay" - presented at the A.I.Ch.E. Symposium on Recent Advances in Reprocessing of Irradiated Fuels, New York City, Nov., 1967.

2. H.N. Sethna and N. Srinivasan, "Fuel Reprocessing in India - Technology and Economics" Paper prepared for presentation at the Nuclear Metallurgy Symposium on Reprocessing of Nuclear Fuels, Ames, Iowa (USA) August 1969.

3. N. Srinivasan et al "Co-extraction of uranium and plutonium with tributyl phosphate" - BARC report under preparation.

4. Internal report.

5. N. Srinivasan et al "Studies on the use of uranium IV as a reductant for plutonium in Purex process" - BARC-375.

6. N. Srinivasan et al "Trilauryl amine as an extracting agent for the final purification of plutonium during the reprocessing of irradiated fuel" BARC-374

7. N. Srinivasan et al "Process Chemistry of Neptunium" BARC report under preparation.

8. A.V. Hariharan et al "Direct chlorination volatility processing of nuclear fuels - Laboratory studies" Paper prepared for presentation at the Nuclear Metallurgy Symposium on Reprocessing of Nuclear Fuels, Ames, Iowa (USA) August 1969.

"Reprocessing of highly irradiated fuels - some alternatives"

N. Srinivasan, India.

Abstract.

The paper discusses the problems of the presently known methods of reprocessing, both aqueous and nonaqueous and presents a hybrid flowsheet selecting the most suited process for each step of the flowsheet. The flowsheet suggests shearing of the fuel, oxidative removal of volatile fission products, nitric acid dissolution, amine extraction of plutonium and fluoride volatility decontamination of uranium consigning high active waste to the fluorinator solid residue.

.-.-.

Introduction

Historically fuel reprocessing has gone through a wide spectrum of conceptual evolution. The "Bismuth phosphate process" served its immediate purpose of providing atleast one method of separating the plutonium formed by the irradiation of uranium. The incomplete recovery of plutonium and the high cost of chemicals in this process led to its being replaced by solvent extraction processes(1). Progressively ether and hexone were replaced by tributyl phosphate as the solvent and the "Purex process" using TBP in a suitable diluent is almost the universal aqueous process for fuel reprocessing. The limitations of this process due to solvent damage in intense radiation fields and the problems of criticality and the fact that the fissile material has to be dissolved and then reformed to its original chemical composition, say oxide, started the search for dry processes. The dry processes demonstrated are based either on fluoride volatility or the reductive transfer of the uranium and plutonium between a molten salt mixture and metal alloys. Extensive operational experience in reprocessing of thermal reactor fuels

...irradiated

---

*Head, Fuel Reprocessing Division, Bhabha Atomic Research Centre, Trombay, Bombay-85 AS irradiated upto 20,000 MWd/te has established the economic acceptability and technological superiority of the Purex process (with modifications to suit each situation) for reprocessing thermal reactor fuels. It is in the context of the future necessity for processing high burnup short cooled fast reactor fuel that the limitations of the aqueous process have been highlighted and distinct advantages claimed for dry processes.

Special considerations

The reprocessing of fast reactor fuels is characterised by the higher intrinsic value of the fuel per kilogramme with the corresponding significance of inventory costs and the higher burn up of the fuel with its impact on the method of reprocessing. The irradiated fuel loading for the liquid metal cooled fast breeder reactors (LMFBR) is 5 times more valuable per kg than that of the light water reactors (LWR). Hence there is considerable interest in decreasing cooling time and thereby the interest on fuel inventory. Short cooling decreases doubling time also. On the other hand 30 days cooled LMFBR fuel irradiated to 100,000 MWD/T at 200 kw/kg will have a total heat generation rate of 310 watts/kg compared to 8.5 watts/kg from a 150 days cooled LWR fuel irradiated to 20000 MWD/T at a specific power of 15 kw/kg. This influences the processing method due to the anticipated degradation of process reagents in this high heat release environment.

There is considerable divergence of opinion on the significance of these two aspects on the choice of a method of reprocessing. The choice for reprocessing presently lies between the aqueous methods and the dry processes. In U.K. a plant has been in operation in Dounreay processing high burn up

...fast reactor

fast reactor fuel by aqueous methods not far different from that for thermal reactor fuels(2). Similarly France has built a plant based on aqueous processing for reprocessing plutonium bearing fast reactor fuel from Rhapsodie irradiated to 35000 MWD/T and cooled for 90 days. In Karlsruhe considerable work is in progress on aqueous methods of processing high burn up fast breeder fuels. Work on dry methods is in progress in many countries and the most massive effort appears to be in the Argonne National Laboratory, U.S.A.

Considerable stress is being laid on the radiation and heat generation problems in shipping irradiated fuel after cooling for only 20 days. Heat generation is 40-50 times that for LWR fuels cooled for 3-4 months. Criticality considerations restrict quantity shipped and the storage facilities may require sodium cooling. Hence on-site reprocessing by dry methods and offsite refabrication are considered advantageous. These problems are however common for all methods once the need for short cooling is established. Studies have shown that on site reprocessing by aqueous methods will also be economical for fast fuels unlike for thermal reactor fuels, the difference arising mainly out of the higher cost of transport of irradiated fast reactor fuel.

It is contended that the problem of radiation and heat generation cannot be alleviated by mixing blanket and core cooled for 30 days, as the dilution required to bring on par with LWR fuels is 15 times and that the mixing results in admixture of different isotopes of plutonium. Mixing of blanket and core after 90 days will bring the heat problem on par with the 40000 MWD/T irradiated high burn up fuel of the advanced thermal reactors and processing these by aqueous methods is entirely feasible. Further, mixing of isotopes is of no major significance for recycling the plutonium.

...Comparison

Comparison of aqueous and dry processes

The special problems of aqueous processing of fast fuels are the head end preparation of the fuel, solvent degradation, criticality problems and the disposal of Iodine 131 and xenon 133 and the problem of tritium in the waste stored in aqueous processes. Fluoride volatility process holds greater promise among the dry methods. While the cost of equipment is higher for this on account of the exotic materials of construction and higher containment required for fluorides and fluorinating agents the cell volumes are less and the overall cost is expected to be 60-90 % of aqueous processes for oxide and carbide for 0.08-0.8 tonnes per day. The problems of head end handling and the heat removal during storage and handling are more or less common for both methods.

The limitations in applying fluoride volatility methods to plutonium bearing fuel are those of handling and behaviour of plutonium in plant scale equipment, the insufficient information on decontamination factors for plutonium and engineering components for the process. Solutions to the clogging of off gas filters in plant scale equipment, decontamination of plutonium from fission products, the separation of plutonium from uranium and its quantitative recovery and the behaviour of ruthenium may not be as near as assumed. While theoretically many schemes are possible for solving these problems none are developed enough to assure results. Corrosion aspects cannot be ignored either. The question of establishing fissile material content of the input fuel to the accuracies obtainable in aqueous processes merits serious attention.

A major factor cited against aqueous methods is the solvent damage. A detailed review(3) shows that the information available in literature is conflicting as parameters have not

..been properly

been properly isolated and normalised and the procedure for calculation of dose is not uniform. In the studies on the occurrence of emulsification, the contributory effects of other impurities and the method of solvent washing have not been fully evaluated. It appears that upto a dose of 1 whr/l there is no significant retention of plutonium in the solvent nor any appreciable fall in decontamination factors. Experiments where the solvent was subjected to 20 whr/l in a 160 cycle study showed that there is no appreciable effect. The maximum damage to the solvent should occur in mixer settlers. The exposure here is calculated as a few tenths of a whr/litre per cycle and no significant damage is reported. The exposure in processing LMFBR fuel in pulsed columns is expected to be of the same magnitude only (about 0.1 whr/litre/cycle) and can be reduced further by operating a dilute flowsheet with 15 % TBP where the flooding velocities are higher and hence columns sizes will not be unduly large. The successful development of centrifugal contactors with residence times of a few seconds can contribute to weaken the aspect of solvent damage as a factor against aqueous methods.

It is reasonably clear that the problems of reprocessing short cooled LMFBR fuel by aqueous process are no more insurmountable than those of the dry methods with the aqueous processes having the advantage of proved performance over a number of years.

Suggested flowsheet and alternatives

The large experience built on the various alternative Purex flowsheets and the extensive development work carried out so far and in progress now in various countries on the non-aqueous processes can possibly lead to the disappearance of the distinction in terms of dry and wet processes as mutually exclusive. A trend has already been set by the "Aquafluor" process(4) and this can well be the forerunner for flowsheets which combine aqueous and dry processes choosing for each step the most selective process with the least limitations. With the aqueous process, while very high decontamination factors are realisable solvent damage and criticality can be the limitations. The fluoride

..volatility

volatility process is eminently suitable for uranium processing and is capable of high decontamination factors, but the problems with plutonium separation and purification are not so simple. The salt transfer processes apart from being less well demonstrated have lower decontamination performance than the fluoride volatility process, but do not have the problems of corrosion and containment to the same extent as fluoride volatility processes.

One could conceivably develop a flowsheet starting with the aqueous process and add or substitute process-steps that would remove the disadvantages of the aqueous method. Accepting solvent damage as a significant limitation, one could find ways of minimising this effect by removing part of the activity from the feed prior to solvent extraction. The ratio of activity between fast reactor fuel irradiated to 100,000 MWD/te cooled for 30 days and that of LWR fuels irradiated to 20,000 MWd/te cooled for 150 days is reported to be about 40. The fairly well demonstrated manganese dioxide scavenging, with further development work, may well provide the means of achieving this(5).

It is reported that the radiation degradation products from amines are less troublesome than those of TBP.(6) The use of amines for extraction of plutonium directly from the scavenged feed will remove the limitations due to criticality from the subsequent stages of processing of the uranium-fission product stream of large volumes. This step also avoids the problems associated with partitioning of high-plutonium containing fuel solutions. Once the plutonium has been removed the uranium with all the fission products from the feed is well suited for reprocessing by the fluoride volatility method thereby providing the advantage of good decontamination factors and compact solid wastes, without any of the difficulties associated with fluorination, separation and purification of plutonium. No aqueous high active wastes are

...generated

generated as the fission product removal is confined to the dry part of the flow sheet.

A conceptual flowsheet with different alternatives for each step is shown in Figure 1. In addition to the steps discussed earlier, an additional decontamination cycle may be required for the plutonium furnishing a feed suitable for conversion to oxide or carbide by standard processes and an intermediate denitration step for the uranyl nitrate fission product stream after the amine extraction for subsequent fluoride volatility processing.

Status of development

For the decladding step, the zinc dissolution of stainless steel is being actively developed, in the context of pyrochemical reprocessing. Chop leach process is well established and compact shears are being developed for the fast reactor fuels(7). The problem of criticality at the dissolution stage can be surmounted by fixed poisons. While fuel containing less than 25 % PuO_2 dissolves without difficulty in nitric acid an intermediate step of oxidation may well improve the dissolution. Such a step may also enable the release and containment of the volatile fission products in a small volume suitable for storage and disposal(8).

The feed pretreatment with permanganate and manganous salts leading to the precipitation of manganese dioxide and the scavenging of zirconium-niobium and to some extent ruthenium is not a new concept and can be standardised for fast reactor fuel solutions. Feed clarification steps have become fairly standard in aqueous processing and can very easily be adopted for the removal of the precipitate for disposal in a small volume.

..There is

There is almost universal interest in the use of amines for solvent extraction of plutonium. In addition to trilauryl amine so successfully used in France, other amines as for instance di(tridecyl) amine are found to have superior properties especially for application to high burnup fuels(6)(9).

Fluoride volatility process without the problems associated with the release of volatile fission products and the fluorination and purification of plutonium can be considered well established and the decontamination performance demonstrated points to the possibility of obtaining an acceptable uranium product in one single cycle of fluorination and absorption/desorption with a sodium fluoride bed. A distillation step, if required, has also been fully established for production scale use. The intermediate denitration step, most probably on a fludised bed, is standard practice now in uranium refining and can be easily adopted.

Economics

While it will be premature to attempt any economic evaluation of such a conceptual flow sheet some semi-quantitative statements can be made on the cost aspects based on available information. Adopting the figures in ANL 7137(10) as reference figures, one can make a guess that the capital costs for a plant based on the hybrid flowsheet discussed above will be in the range of \$ 4.8 to 5.2 million compared to the \$ 5.9 million for an all aqueous plant and \$ 4.2 million for a fluoride volatility plant for a throughput of 22.7 tonnes per year. The investment on waste disposal facility would be practically the same as for a volatility plant viz., \$ 1.4 million as against the \$ 2.4 million for an aqueous plant. By an extension of the same reasoning operating costs will be intermediate between those for the two processes probably closer to that claimed for the volatility plant.

No economic evaluation can have universal significance. Variations in financing procedures, skilled labour costs, availability of materials of construction, customs duties and tariffs have significant impact on the economics with respect to

...capital

capital costs and operating costs. Studies in India indicate that on account of low labour costs (about one order of magnitude lower than in advanced countries) capital costs for aqueous reprocessing plants may be 40 % of those in North America. Cost advantages due to reduced operating man power are also less significant in such a context. These factors tend to reduce the gap in costs claimed between aqueous and dry processes and the choice will then be essentially based on technological considerations.

Conclusion

The flowsheet suggested is one of many possibilities and takes into account only presently well established process steps. The purpose of the paper is mainly to focus the attention of the Panel on the extensive potentialities for hybrid flowsheets in the reprocessing of highly irradiated fuels.

References

1. S.M. Stoller and R.B. Richard, Ed., Reactor Hand Book, Second Edition, Vol. II, Fuel Reprocessing 1961 - p.227.
2. R.H. Allardice, "Reprocessing of Fast Breeder Fuels by Aqueous Methods Part I - Reprocessing of Fuel from Dounreay Fast Reactor", Kjeller Report KR-126.
3. C.A. Blake Jr. "Solvent Stability in Nuclear Fuel Reprocessing" ORNL - 4212
4. W.H. Reas "The Aquafluor* process", Kjeller Report KR - 126.
5. R.C. Weber "The Removal of Radioactive Zirconium and Ruthenium from process solutions: Permanganate treatment" Prog. in Nucl. Energy Series III Process Chemistry (Vol. 2), 1958.
6. D.E. Ferguson et al Chemical Technology Division. Annual Progress Report for period ending May 31, 1967 - ORNL 4145 P-55.
7. D.E. Ferguson et al Chemical Technology Division. Annual Progress Report for period ending May 31, 1968 - ORNL 4272 P-39

...Ibid

8. Ibid p-41

9. Ibid p-54

10. M. Levenson, et al., "Comparative cost study of the processing of fast breeder reactor fuels by aqueous volatility and pyrochemical methods" - ANL - 7137.

o-o-o-o-o-o-o

Fig. 1. A conceptual flowsheet for reprocessing highly irradiated fuels

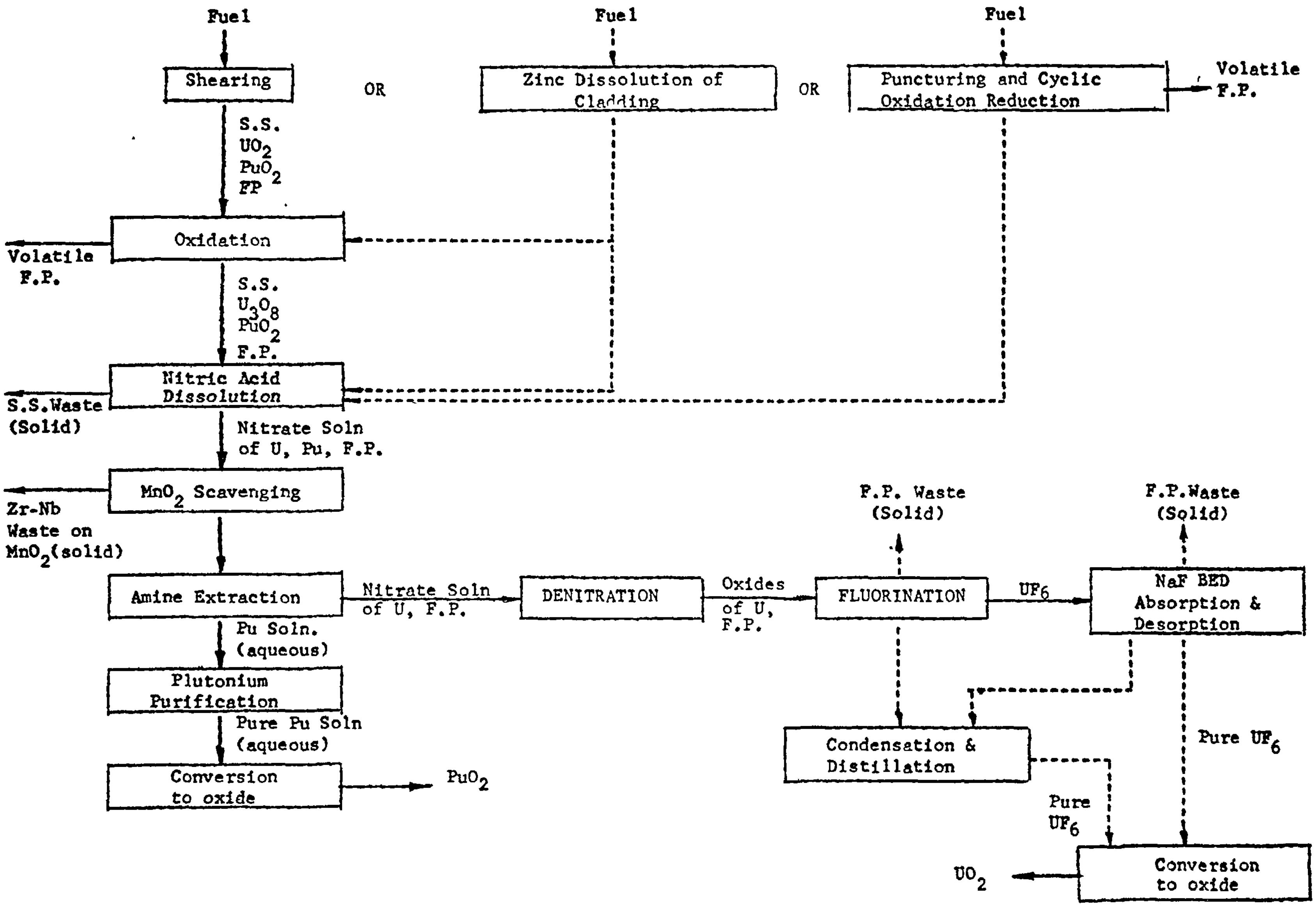

A PYROCHEMICAL SEPARATION OF PLUTONIUM FROM IRRADIATED FUELS

A. Avogadro, J.G. Wurm

COMMISSION DES COMMUNAUTES EUROPEENNES
EURATOM - ETABLISSEMENT D'ISPRA DU CCR
DEPARTEMENT DE CHIMIE
SERVICE TECHNOLOGIE CHIMIE HAUTES TEMPERATURES

ABSTRACT

A Pyrochemical Separation of Plutonium from Irradiated Fuels

A. Avogadro[*], J.G. Wurm[**]

The described pyrochemical flow sheet is based on a hybrid molten salt-aqueous fuel cycle for the separation of plutonium in high burnup fuels. A plutonium concentrate is extracted on the reactor site by means of a molten salt media and its final purification is achieved by an aqueous method.

The pyrochemical reactions involved proceed in two steps :

- the chopped or decladded fuel is first submitted to an oxydation-desagregation step with molten NO_3Na in which insoluble uranates and plutonates are formed
- in the second step the uranates and plutonates in suspension in a chloride flux ($MgCl_2$-$NaCl$) are submitted to an $HCl + O_2$ oxy-chlorinatio reaction which transforms the uranate into soluble UO_2Cl_2 and the pluto into insoluble PuO_2. This latter is separated by filtration and purifi through an aqueous method. The uranium is recovered as UO_3 through an MgO precipitation.

The hybrid fuel cycle combines all the advantages of dry and aqueous methods together and minimizes their respective disadvantages. Therefore th pyrochemical Head End combined with an aqueous process for final purificatio opens the way to shorter cooling times ; reduced fuel transportation costs, simplifications of the aqueous processing plant, and saving in waste disposal

It could be applied as well for the processing of low Pu thermal fuels as for the processing of highly irradiated Fast Breeder Fuels. Both ways ar described and discussed.

[*] CCR Euratom Ispra, Italy

[**] CCR Euratom, present address, C.E.N.-S.C.K., Mol, Belgium
Head of the Reprocessing Project

In this communication we would like to analyze an aspect of the reactor fuel cycle which concerns the recycling of the produced plutonium. We will consider only the part of this cycle outside the reactor, between unloading of the spent fuel element and returning of a new purified and regenerated element in the reactor.

Figure 1 illustrates schematically the succession of the steps constituting the actually envisaged fuel cycle : the fuel, unloaded from the reactor, is submitted to a cooling period of 3 to 4 months and is then sent to the central reprocessing factory where uranium and plutonium are decontaminated by organic solvent. After uranium separation, plutonium passes on to the next step, consisting in mixing Pu with natural or slightly enriched U and in refabrication of the fuel element. The depleted uranium, of which the fissile value equals zero, is separated from the cycle and stored.

Figure 2 represents the fuel cycle considered in this study and based on a mixed treatment system. This system is constituted of a first stage of extraction and pyrochemical concentration of plutonium, executed on the reactor site after a short cooling period (about 1 month), followed before refabrication of the fuel element, by a final Pu purification in a specialize plant. We want to demonstrate that, by this hybrid method, the advantages of dry reprocessing may be combined with those of aqueous reprocessing or fluorination, while reducing their disadvantages. Table I summarizes the most important advantages and disadvantages of both reprocessing methods. The main handicaps of aqueous reprocessing are the duration of the operation cycle and solvent degradation. On the contrary, a hybrid system : a combine dry-aqueous reprocessing permits elimination of these disadvantages and allow to profit from the advantages of aqueous reprocessing and particularly of the high decontamination factors. The same advantages would be presented by a dry reprocessing system in which final purification is done by fluorination.

Since the dry and aqueous treatments are mutually independent, they can be performed at two different places. As an illustration, two typical cases for which the Pu extraction at the site of the reactor is "a priori" economically interesting, can be cited.

1. Heavy water reactors

Fuel discharged from these reactors contains appreciable PuO_2 quantities (0.5 - 1 %) justifying recovery, while uranium, having a negligible fissile value, may be separated from the cycle and stored. This problem is of interest for those countries constructing power reactors of this type but which do not dispose of a processing plant or perhaps only one central plant but far away from the power reactor. In order to recover small quantities of Pu, the fuel elements will have to be transported over great distances and consequently the cost price of Pu will be considerably influenced.

2. Fast reactors

The problem of fast reactor fuel differs from the foregoing. Indeed, these fuels contain about 20 % Pu and consequently the inventory costs are very high when the recycling time is long. The cooling time must be kept as short as possible. Moreover, the fuels have been submitted to a high burnup and to a high specific power. Consequently the radiation intensity, the generated heat, the high fission product concentration, the presence of sodium either attached or accidently inside the fuel cans, the presence of large amounts of iodine and tritium as well as volatile fission products and nevertheless the high plutonium concentration of the fuel create a series of new problems if the fuel is to be processed by an aqueous method.

Therefore a pyrochemical head-end for the extraction, followed by a final aqueous purification could possibly lower the fuel cycle cost by reduc the Pu inventory. Furthermore the final aqueous purification of an already predecontaminated and concentrated plutonium is also simplified. This way the problem of organic solvent radiolysis is less important and the costs for liquid effluent storage are reduced.If the pyrochemical head-end is moreover performed at the reactor site, the costs for transport of irradiate elements are also reduced ; for fast reactors, these costs are estimated at a value being 5 to 10 times higher than for thermal reactors [1] [2].

In summarizing we can say that the choice of the proposed hybrid fuel processing depends on local economic conditions which are different in every country.

In this paper only a technical approach of the hybrid method is given. An economic investigation of the process would be necessary in every case.

The pyrochemical process we studied in laboratory is based on U-Pu separation in molten salts. This separation is realized by a first reaction of selective oxidation of the fuel followed by a reaction of selective chlorination of the fuel. The whole of the separation flow sheet is based on the following three unit operations (see Fig. 3).

The first unit operation consists in a complete fuel disaggregation (mixed oxide or carbide) in a bath of molten oxidizing and alcaline salts, mainly composed of nitrates and peroxides. This oxidation, carried out at a temperature below 450 °C, gives rise to a finely dispersed product, compose of alcaline uranates and plutonates which are insoluble in this bath. The foregoing reaction can be schematized as follows :

$$UO_2\ (PuO_2) + 2NaNO_3 \longrightarrow Na_2UO_4\ (Na_2PuO_4) + 2NO_2\nearrow$$

At a relatively low temperature, this oxidizing disaggregation presents several advantages :

- The reaction is selective with respect to the fuel ; therefore the cladd (stainless steel or Zr alloy) is not attacked. This phenomenon can be used for combining disaggregation with decladding.
- The cladding and fuel separation is facilitated by the fact that the oxidation reaction is accompanied by an increase of the fuel volume detaching completely the fuel from the previously sheared can. The emptied hulls can easily be withdrawn from the bath by means of a perforated basket.

This decladding and disaggregation phase is followed by a separation of precipitate and solvent. After being readjusted in nitrates or peroxides, this solvent can be recycled several times. The uranate-plutonate precipita is than suspended in another solvent composed of molten chlorides (e.g. KCl-LiCl or $MgCl_2$-NaCl) and is thus ready for chlorination. This second operati consists in transforming the uranate into a soluble oxichloride by a selecti reaction leaving Pu in the batch as an insoluble precipitate. The latter ca be recovered by simple filtration. This transformation is realized by a gaseous mixture of HCl and O_2 solubilizing uranium following reaction (2) and transforming Pu into PuO_2 following reaction (3) :

$$(2)\quad Na_2UO_4 + 4\,HCl \longrightarrow 2NaCl + UO_2Cl_2 + 2H_2O$$

$$(3)\quad Na_2PuO_4 + 4\,HCl\,(O_2) \longrightarrow 2NaCl + PuO_2 + Cl_2(O_2) + 2H_2O$$

Indeed, according to the realized experiments, reaction (3) can be explained as being the result of two stages : in a first stage, an intermedi oxichloride type soluble compound of Pu is obtained ; in a second stage, thi compound, which is not stable in presence of a high partial O_2 pressure decomposes completely into $PuO_2 + Cl_2$. This oxichlorination reaction can be realized at a temperature of 450 °C, the speed being sufficient to allow a rational utilization of HCl. This is possible by the fact that :

The fuel mixture resulting from chemical disaggregation by nitrates is brought in an ideal physical and chemical state for the next chlorination stage. Indeed, the finely dispersed fuel is better adapted to the reaction heterogeneous chlorination solid gas. On the other hand, from the point of view of chemical thermodynamicsuranate is more easily chlorinated by HCl tha UO_2, while Pu remains insoluble in the chosen chlorination conditions. As s as uranate is completely solubilized, the Pu precipitate is recovered by filtration.

The last operation consists in recovering uranium from the filtrate and precipitate as an insoluble oxide. This precipitation was realized by reduc of the uranyl with ammonia at 700 °C or, even better, by precipitation with MgO at 450 °C.

$$3UO_2Cl_2 + 2NH_3 \longrightarrow 3UO_2 + 6HCl + 3N_2$$
$$UO_2Cl_2 + MgO \longrightarrow UO_3 + MgCl_2$$

This second precipitation is the most advantageous one avoiding a gaseo HCl release, working at a lower temperature and obtaining a more economical utilization of the solvent, which can be recycled.

The validity of the different stages of the flow sheet is based on laboratory experiments done at CCR Ispra and at the Institute of Transurania Karlsruhe. At Ispra, we worked out the follow-up of unit operations with uranium only, simulating Pu by Th or Ce. At the Euratom Trans Uranium Instit at Karlsruhe we controlled Pu behaviour in the same working conditions. Sint pellets, on basis of oxides (10 to 20 % PuO_2) have been used as starting product for these experiments.

During the phase of disaggregation with nitrates, the behaviour of UO_2-I is different according to their preparation. Pellets obtained starting from mechanical mixture of the oxides, react rapidly and completely (60 min) from 400 °C onward, whereas pellets formed from a solid solution of the oxides onl react at 450 °C and require a longer reaction time (90 min).

Separation of the fuel from the sheared can by this reaction, must stil be confirmed with a really irradiated fuel. It can however be guaranteed th this oxidation reaction can be realized at 450 °C, within a reasonable time (~ 90 min), for any composition of the fuel on basis of mixed oxides at the reactor outlet. We did not perform any experiment with mixed carbides (UC-PuC). The experiments done with UC only however showed that the reactio of carbide with the molten bath of nitrates is very violent. Consequently the nitrates have to be diluted in order to control the reaction and to keep the temperature of the batch below 500 °C. As a bath for disaggregation and decanning of the carbides we used the molten mixture NaOH-NaNO$_3$, or even bet the molten eutectic LiCl-KCl to which was added the quantity of nitrate required for oxidation. This second possibility offers the great advantage of permitting to realize the first two operations (disaggregation and dissol of U) in the same vessel and with the same solvent. The product of the reac of carbides with the oxidizing bath is the same as the one of the oxides. carbon contained in the carbide is indeed completely burnt by the molten bat

Up to now it was supposed that Pu transformed into plutonate. As a mat of fact, the precise nature of this powder has not yet been determined analytically, hypothesis of plutonate formation is based on the results of a Russian study [3] effectuated by reaction of PuO$_2$ in a molten NaOH and KOH bath and is formulated in analogy with the behaviour of uranium in the same conditions. The behaviour of uranate and plutonate with respect to chlorina in molten salts with HCl only, also presented anomalies due to the origin of the pellet.

Fig. 4 shows the results of chlorination of a series of tests performed with oxides of different composition and origin (after reaction in nitrates 400 °C). Already at 400 °C, uranate transforms easily in solution, except f the solid solution containing 20 % Pu which requires a higher temperature du the preliminary attack with the nitrates. Plutonate is also, but more slowl solubilized. In order to repeal completely this plutonate solubility and permitting U-Pu separation, we use a HCl-O$_2$ mixture as chlorination agent.

Fig. 5 shows the dissolution rate of uranate for increasing O_2 amounts in the gaseous mixture. We can see that, with a sufficient speed, it is still poss to dissolve uranate even at 90 % O_2, we have chosen 80 % O_2 concentration to perform the U-Pu separation tests. Two tests, with 15 % and 20 % PuO_2 respectively in solid solution and mechanical mixture, confirmed total solubility of uranate after a reaction of 90 min. Parallel, analysis of Pu, soluble in salts, was above the measurement limit. In order to verify solubility of plutonium in molten salts, we proceeded to supplementary disaggregation and oxichlorination experiments with PuO_2 only. After attack of the nitrates, solubility of Pu in the excess salts was 80 ppm ; after oxichlorination in normal conditions, 1,050 ppm Pu were still detected in th chloride bath. It is estimated that this phenomenon is largely due to the PuO_2 finaly dispersed in suspension in the bath and which passes through the filter (porous glass). An addition of Al_2O_3 powder into the melt reduced th Pu values to less than 500 ppm. Therefore the presence of the Pu in the mel was rather due to a dispersion of small Pu insoluble particules. The last stage of the flow sheet consists in separating uranium in oxide form. This separation can be performed by electrochemical methods which consist in depositing UO_2 at the cathode of an electrolytical cell [4] [5]. Precipitation of UO_2 in molten salts by reduction with H_2 or dissociated NH_3 has also been studied by several authors [6]. We did not perform any particular test on these already well known and experimented methods. On th contrary, we studied the possibility of precipitating uranium under form of UO_3 by addition of an oxide.

Fig. 6 gives two examples with MgO and ZnO. It can be seen that a smal oxide excess is sufficient for precipitating uranium. Reaction with MgO offers the double advantage of eliminating depleted uranium under a stable f (UO_3), ready for storage and at the same time regenerating the molten salt bath, which can this way be used again for a new dissolution.

In the preceding, we presented the pyrochemical step which constitutes in fact the original and new part of this hybrid method. This method is mainly conceived in order to realize a quick and efficient separation between Pu and U. It is understood that the so separated Pu must undergo a final purification in order to avoid remote refabrication. The stage of final purification of Pu can be realized without any other modification either by known and experimented aqueous methods or by fluorination. Since the plutoniu concentrate is already partially decontaminated, the final treatment is distinctly simplified. Indeed, during the analyzed flow sheet, we obtain a partial decontamination at each operation. In the disaggregation phase the volatile fission products (Xe, Kr, Ru, I_2 and Te) are eliminated. In the chlorination phase, certain fission products (rare earths, Cs and Sr) are soluble in the molten bath, separating this way from the plutonium precipitate The other fission products can be precipitated with uranium or remain in solution in the molten salt and are progressively eliminated as the solvent i separated as solid waste.

REFERENCES

[1] R. GIBRAT, J. GAUSSENS, F. LICHTENBERGER : Programme et Economie des Réacteurs Rapides - 3ème Congrès de Foratom Session VI.

[2] M. LEVENSON, V.G. TRICE Jr, W.J. MECHAM : Comparative Cost Study of the Processing of Oxides, Carbide and Metal Fast Breeder Reactor Fuels by Aqueous, Volatility and Pyrochemical Methods - ANL-7137 (May 1966).

[3] D.E. ZASTENKER, O.L. BEDINA, V.D. NIKOL'SKII and H.E. POZHARSKAYA : Oxydation of Plutonium Dioxide by Atmospheric Oxygen Radiochemistry (Russ) 1965, 122-23.

[4] F.A. SCOTT : The Electrolytic Growth of Dense Self Supported UO_2 Shapes USAEC Report HW-74 784 (Oct. 1962).

[5] R.S. WILKS : A Study of the Mechanism of the Electrolysis of UO_2Cl_2 in Molten NaCl-KCl Eutectic - J. Nucl. Materials (2) 7, 157-164 (Nov.1962)

[6] A. AVOGADRO, A. DE PLANO, S. KRAWCZYNSKI, P. VANLOO : Purification of Uranium from Fission Products by Means of Fractionnal Precipitation of UO_2 by Reduction of UO_2Cl_2 from Alkalichloride Melt - Atomkernenergie 10-50 (301-303) 1965.

ACKNOWLEDGMENTS

We are gratefully indebted to Messrs M. MAURICE, L. ANGELETTI and G. KRAMER of the Institute of Transuranians Karlsruhe for their appreciable help in realizing the experiments and for the analyses on the obtained sample

Our gratitude goes also to Mr. DE PLANO, and Mr. P. VANLOO from the Chemistry Department at Ispra for their active participation in the laboratory experiments.

TABLE I

PROCESS	ADVANTAGES	DISADVANTAGES
Dry process	- very short cycle - compact installation (can be integrated with the reactor), radioactive effluents under solid form, small volume and easy storage - no radiolysis problems - reduction of cooling time - very limited immobilization costs - limited criticality problems	- incomplete decontamination (refabrication after the protections) - more difficult choice of materials - necessity of controlled atmosphere
Aqueous process	- excellent decontamination - no great material problems - the decontaminated fuel is already prepared for reconversion (coprecipitation, sol gel, etc.)	- radiolysis of solvents and long cooling time important costs for immobilization of fissile material - long operation cycle rather important investment and exploitation cost

Fig. I : FUEL CYCLE

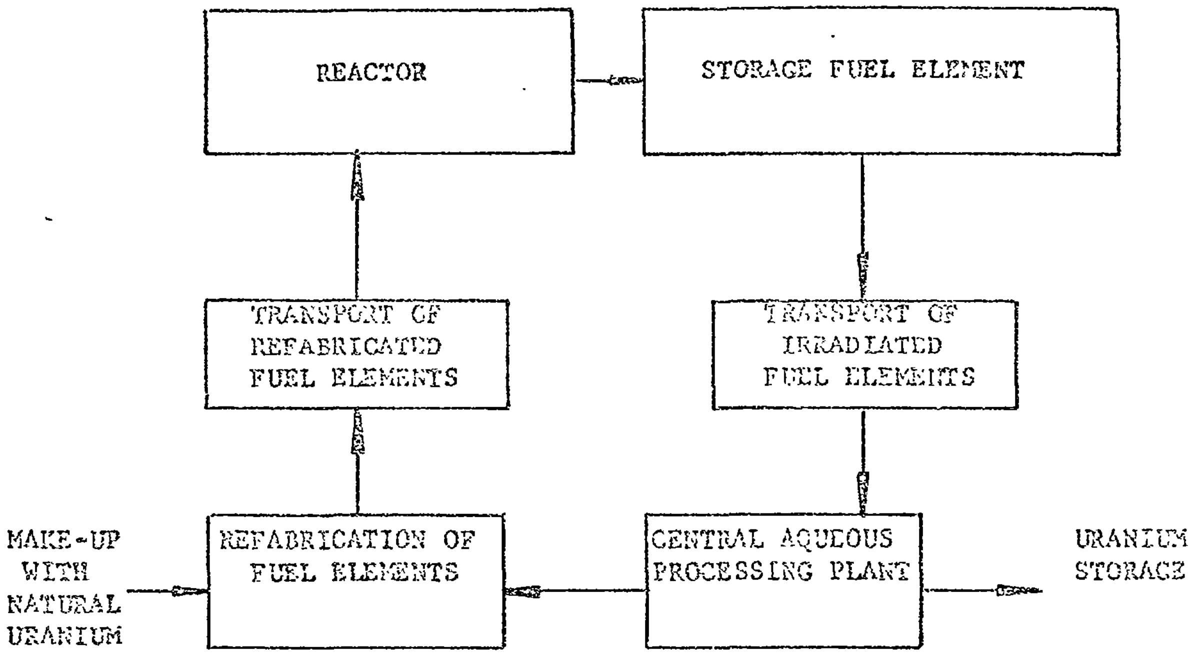

FIG. 2 : FUEL CYCLE WITH HYBRID PROCESSING

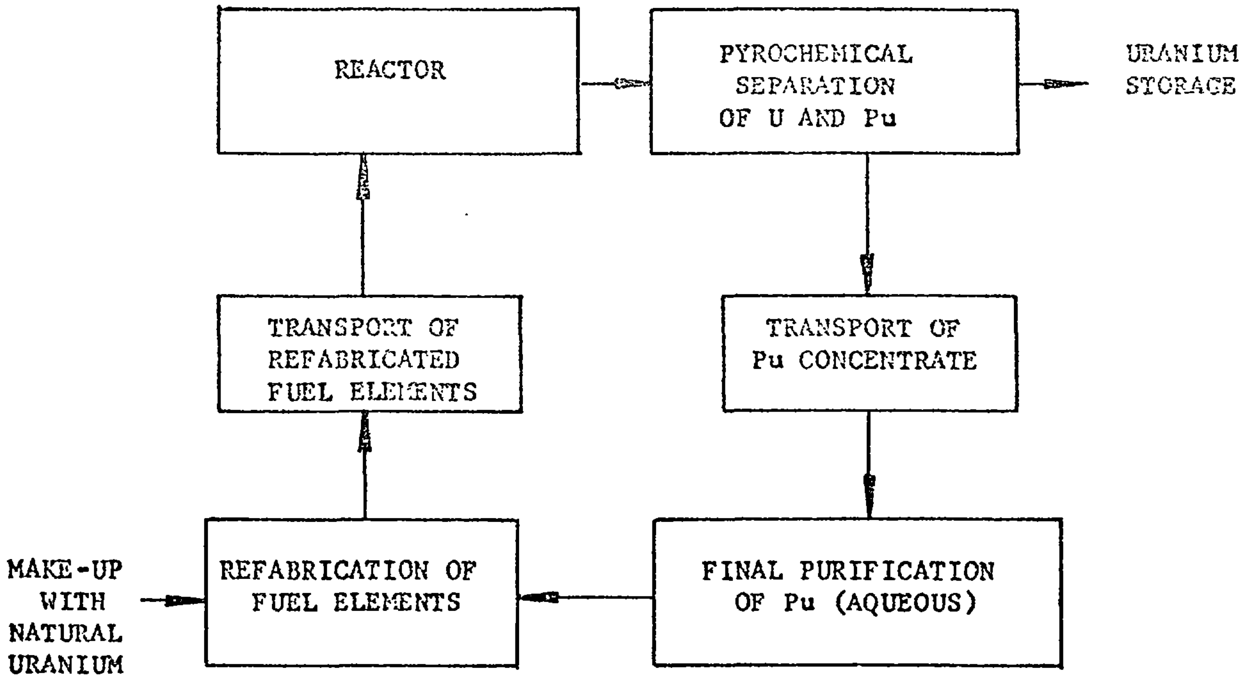

FIG. 3 : FLOW SHEET IN THREE STEPS

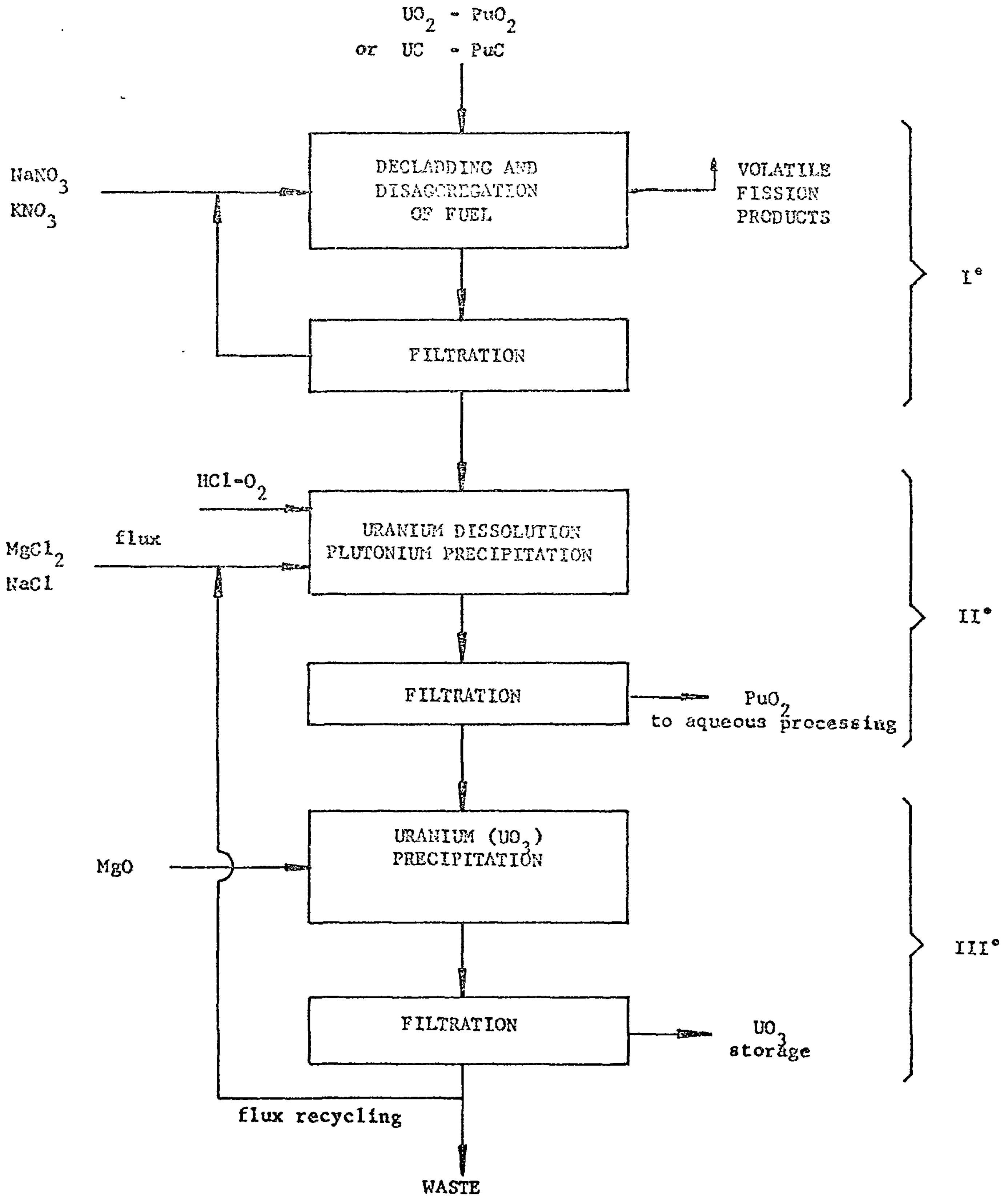

FIG. 4 : BEHAVIOUR OF URANATE AND PLUTONATE DURING CHLORINATION IN KCl - LiCl AT 400 °C

s.s. = solid solutions of oxides

m.m. = mechanical mixing of oxides

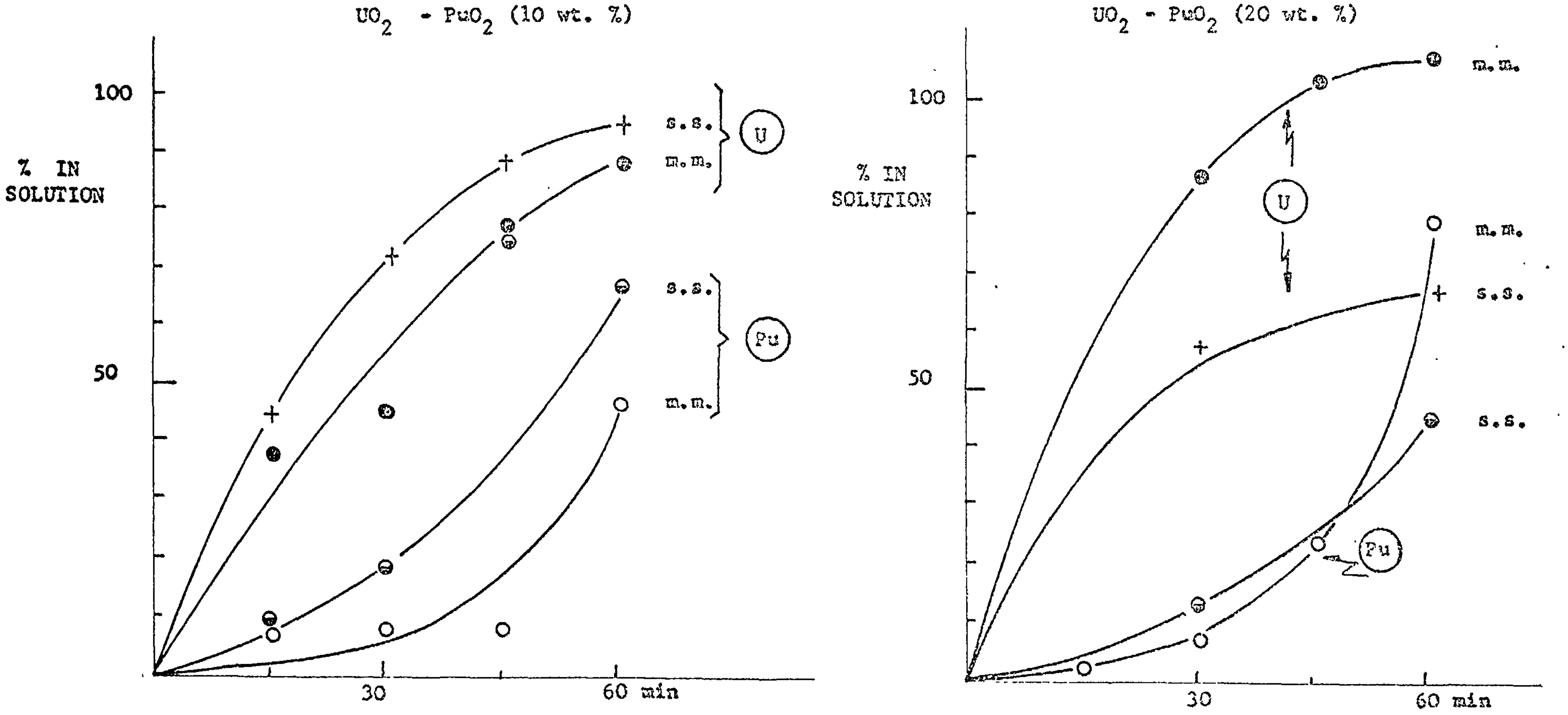

FIG. 5 : OXYCHLORIDE REACTIONS

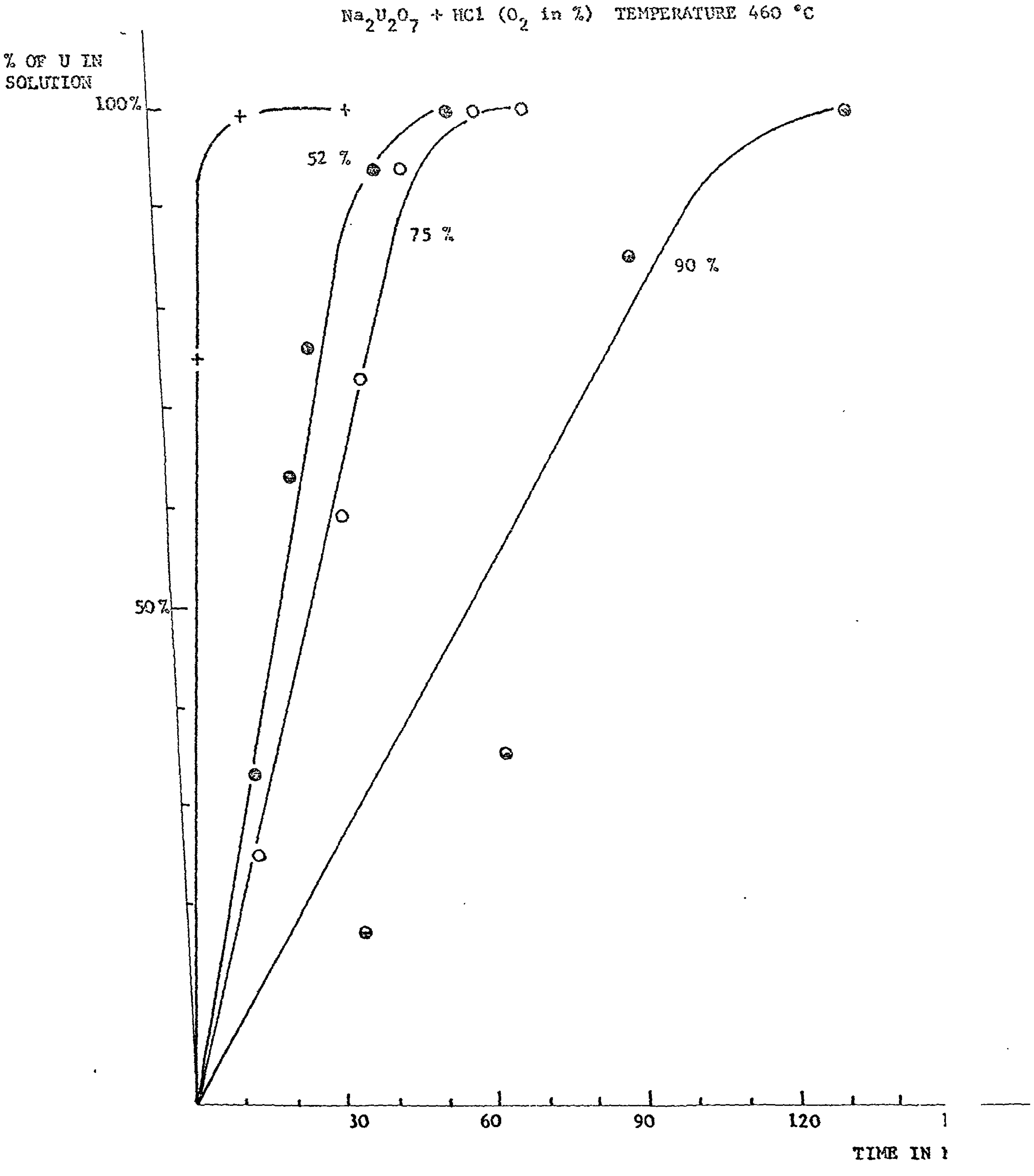

FIG. 6 : UO_3 PRECIPITATION

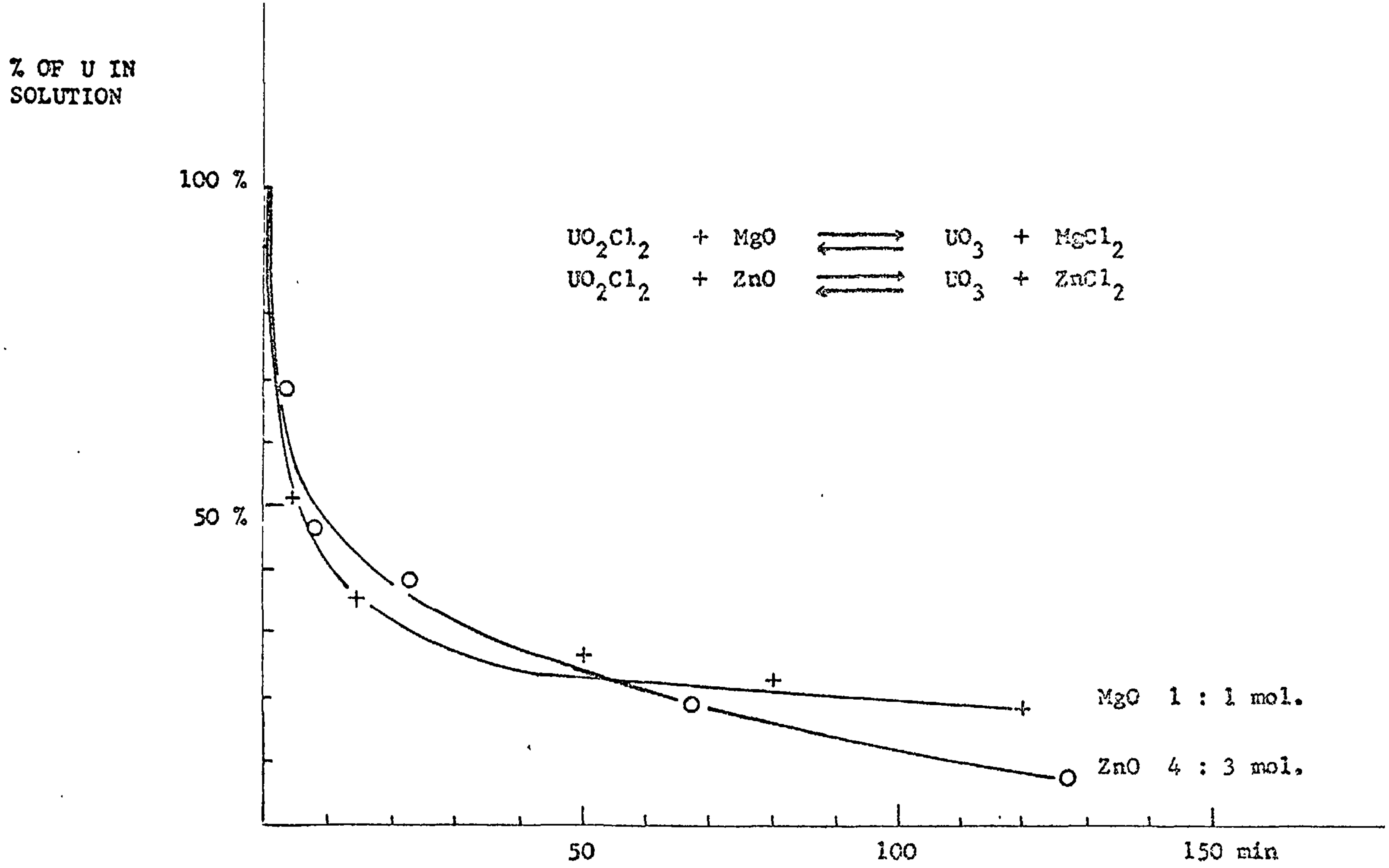

LIQUID METAL DECANNING OF HIGHLY IRRADIATED UO_2-PuO_2/STAINLESS STEEL CLAD FUELS

J.G. Wurm, M. Payrissat

COMMISSION DES COMMUNAUTES EUROPEENNES
EURATOM - ETABLISSEMENT D'ISPRA DU CCR
DEPARTEMENT DE CHIMIE

ABSTRACT

LIQUID METAL DECANNING OF HIGHLY-IRRADIATED UO_2-PuO_2/STAINLESS STEEL CLAD FUELS

J.G. Wurm[*], M. Payrissat[**]

A new decanning process for fast breeder fuels of the UO_2-PuO_2/stainless stee type has been investigated.

The method is based on a selective dissolution of the stainless steel claddin material in a liquid metal solvent composed of Sb-Cu (23 wt.%) at temperatures between 800 - 950 °C. The stainless steel dissolution rates, which vary between 40 and 60 wt.% are strongly temperature dependent. The crucible material is composed of graphite. The fuel UO_2-PuO_2 is separated from the liquid solvent all by filtration. Microprobe examinations have shown that after solidification the structure of the solvent alloy including stainless steel is rather uniform.

The dissolution rates of different nuclear stainless steel types and nickel alloys have been investigated and are compared.

This liquid metal dissolution process offers many potential advantages over the mechanical or chemical decladdding methods, particularly for highly-irradiated fuels.

The presence of Na would not be of great concern since Na is slightly soluble in the Sb-Cu alloy.

The canning dissolution can be performed directly without disassembling the fuel element. Therefore the costly fuel element preparation steps will be short

Furthermore, the fission gases are evacuated and condensed in minimum volumes Also the solvent alloy Sb-Cu loaded with a maximum of stainless steel is easily stored as a solid waste.

The whole decanning process can be carried out with a very compact equipment located on the reactor site.

---

[*] CCR Euratom, present address, C.E.N.-S.C.K., Mol, Belgium
Head of the Reprocessing Project

[**] CCR Euratom Ispra, Italy

INTRODUCTION

Reprocessing of highly-irradiated fuel introduces a series of new problems which must be solved with newly developed techniques (1),(2).

In view of high burn-up and short cooling times of the fast breeder fuels, this is of particular importance for the development of new head end processes.

In such a context, fuel decanning holds a key position. At the time the present work was initiated, it was already foreseeable that decanning of fast breeder fuels by conventional methods might be a very difficult task.

Considering the problem of heat generation and the presence of sodium, eithe attached or present as a thermal bonding, we therefore ruled out mechanical decladding. After careful examination of the existing possibilities we decided t investigate the problem from the metallurgical point of view. Therefore the purp of our programme was to search for a solvent metal or even better, a liquid metal solvent alloy for the dissolution of stainless steel and the higher nickel alloys. Shortly after the work was started, Argonne National Laboratory mentioned in thei conceptual flow sheet of the "Salt Transport" the use of zinc for the stainless steel decladding (3).

A Russian team : Novoselov and al (4) described a thermal method for decladding stainless steel canned fuel elements. By this method the fuel element is heated up to 1700 °C and the molten stainless steel is separated from the fuel by filtration. However its scaling up has still to overcome very severe material problems at these high operating temperatures.

Our first approach went through a theoretical investigation of the liquid metal decanning problem. In order to be of some practical value, the hypothetica liquid metal solvent for stainless steel had to satisfy following selection crite

- The dissolution rate of the stainless steel in the liquid metal solvent had to be superior to 30 wt.%.
- The dissolution temperature had to be inferior to 1000 °C in order to minimi engineering problems such as e.g. furnace construction.

- The dissolution kinetic had to be fast enough.
- The liquid metal solvent had to be selective for the canning material (a chemical attack of the fuel could not be tolerated).
- The melting point had to be low and the fluidity good enough for separating purposes from the fuel.
- Volatile metals had to be excluded.
- The solidified solvent alloy had to be appropriate for easy storage.
- The price had to be inferior to 1 $ / kg.

Considering these severe selection criteria, it was obvious that the number of metals to be retained was restricted. Therefore we discarded all alcaline, alcaline earth, rare earth and noble metals. We discarded also zinc and magnesi for their high vapour tension and chemical reactivity.

Cd, Sn, Bi were eliminated because they form stable intermetallic compounds with Fe and Cr. Also Pb and Fe are mutually insoluble. Finally we retained fou basic metals :

Al ÷ Cu ÷ Mn ÷ Sb

Then we compared the phase diagram of each basic metal with Fe-Cr-Ni. We concluded that Al could dissolve appreciable quantities of Fe-Cr and Ni but the dissolution temperature could be well over 1000 °C. Cu and Mn had medium dissolving properties also over 1000 °C.

Undoubtedly Sb revealed itself as an ideal solvent for stainless steel and we retained it as our first priority solvent metal. However, since stainless st has a simple austenitic structure, but must be considered as a multicomponent al with many other additions such as Nb and Mo, it was obvious that Sb alone could not provide an optimum solution. A binary or even ternary liquid metal solvent could more easily be optimized and promised to be more flexible for dissolution of the different stainless steel varieties and nickel alloys to be considered as canning and structural materials. Therefore we considered following binary phas diagrams as potential liquid metal solvent alloys : Sb-Al, Sb-Cu, Sb-Mn, Al-Cu, Al-Mn.

The conclusions are summarized in Table I.

In the present work we consider only the binary alloys Al-Cu and Sb-Cu ; all other binary alloys are less efficient. The phase diagram Al-Cu is very complex on the Cu-rich side and therefore we consider only the Al-rich side aroun the eutectic with 67 wt.% of Al (Fig. 1).

The phase diagram Sb-Cu presents almost an ideal situation. On the Sb-rich side the solidus line goes from 50 wt.% Sb to pure Sb at 526 °C with a wide open liquidus line over it. The eutectic at 76.5 wt.% will be the "working area" for the liquid metal solvent (Fig. 2).

Two ternary alloys are of interest :

(a) the Sb-Cu-Al with Sb as the major component ;
(b) the Al-Cu-Sb with Al as the major component.

A series of preliminary dissolution experiments have shown that Sb-Cu binary alloy had the best performance, we considered it as our absolute priority solvent alloy.

EXPERIMENTAL

The experiments have been performed in a Heraeus vacuum furnace (Fig. 3) with water-cooled walls. A vacuum of 10^{-6} Ton can be obtained through a diffusio pump (D 2000), a root pump (Rg 350) and a DK 45 primary pump connected in series. The induction heating system (Fig. 4) (10 k Hz) is connected to a rotating STEL generator of 50 kW. The crucible, containing the liquid metal solvent is made of graphite surrounded by a refractory crucible in order to keep the temperature homogeneous. The stainless steel sample to be dissolved, is fixed on a rotating device in order to assure a good mixing of the liquid metal bath (speed of rotati 10-20 rpm). The temperature is measured in the graphite crucible wall by a thermocouple connected to a MECI recorder. measurements are carried out under ar atmosphere at normal pressure. Once the Sb-Cu solvent is molten, the temperature is maintained at a fixed point : the stainless steel sample is lowered into the liquid metal solvent and rotated. After a fixed time (min) the stainless steel sample is retracted from the molten bath and cooled to room temperature. The weig difference gives the dissolution rate at a given time interval.

RESULTS AND DISCUSSIONS

Three liquid metal alloys, Sb-Cu 10 wt.%, 15 wt.% and 23.5 wt.% have been investigated at three temperature levels, 850, 900, 1000 °C. The stainless steel AISI 304 L came from Ugine-Kuhlmann (corresponding type NS 22S).

The experimental results given in Table II are represented graphically on Fig. 6 and 7. The dissolution rates are plotted in wt.% of stainless steel in the Sb-Cu alloy against dissolution time, at different temperatures. Beside the 304 I type it was interesting to know the behaviour of some other potential stainless steel types and nickel alloys such as AISI 310, 420, 431, 316, 309 SCB and 330. The results of these experiments given in Table III are also shown graphically in Fig. 8, 9, 10 with three basic liquid metal solvent alloys : 10, 15 and 23,5 wt Cu at 1000 °C. The curves from Fig. 6 and 7 recall a very normal dissolution procedure. For a given temperature, the dissolution rate at the start is almost linear up to a certain point (saturation point) then the curve becomes flat and behaves like an asymptote. The angle of the linear part determines the dissoluti speed. The reproducibility of these curves can only be obtained if the experiment are carried out under similar conditions. In the vicinity of the stainless steel sample in the liquid metal bath, a concentration gradient is very rapidly establis Since diffusion of the liquid metal solvent into stainless steel is rather slow, t concentration gradient would have a negative effect on the dissolution rate. Therefore rotating of the sample or stirring of the liquid metal bath becomes indispensible. Rotating of the sample was chosen for simplification of the experimental set-up. In all experiments rotating speed, geometry and immersed sur of the sample have been kept identical.

From Fig. 6 and 7 it becomes evident that two main factors have a marked effect on the dissolution kinetics and the saturation point : first the bath temperature and second the liquid alloy composition.

- Temperature influence

The temperature influence on the dissolution kinetics is more accentuated in the upper temperature region as it is shown by the following example. For the Sb-Cu (10 wt.%) solvent alloy and the 304 L sample a temperature ri of 50 °C between 850 and 900 °C increases the dissolution rate only by 5 % but a temperature rise of 100 °C between 900 and 1000 °C increases the dissolution rate by almost 20 %. In practice, a reasonable temperature reg for an acceptable dissolution rate of 60 wt.% will be between 950 and 1000

However, short time temperature excursions up to 1050 °C or even 1100 °C should even be more favourable for the dissolution if the furnace construct allows so.

- Composition of the solvent alloy

From Fig. 7 it becomes also evident that the solvent alloy composition has also a marked effect on the saturation point. The 304 L sample has the best dissolution performance at 1000 °C with a Sb-Cu (10 wt.%) solvent alloy.

The influence of the solvent alloy composition on the dissolution rates is even better illustrated by Fig. 8, 9 and 10, which give a comparison of various stainless steel types.

In Fig. 8 for example, with a Sb-Cu (10 wt.%) at 1000 °C, the lower nickel stainless steel types such as 309 SCB, 304 L, 316 L and 431 have a very good dissolution performance (~60 wt.%). The medium nickel stainless steel types such as 420 and 310 reach their saturation point between 40 and 50 wt.%, and the type 330 high nickel alloy reaches its saturation point even at 20 wt.%.

In Fig. 9 with a Sb-Cu (15 %) solvent alloy at 1000 °C the dissolution rates of the low nickel stainless types 309 SCB, 316 L, 310 S and 304 L decrease slightly. On the contrary the dissolution rates of the high nickel alloys 420 and 330 are improved.

In Fig. 10 with a Sb-Cu (23.5 %) solvent alloy at 1000 °C the shift of the dissolution rates is even more accentuated so that the 330 type reaches its saturation point only at 40 wt.%.

From these results it can be concluded that Cu, in the presence of Sb, is a more specific solvent for nickel. This is not surprising since from the Ni-Cu phase diagram we know that there exists a continuous solid solution between both metals, however well over 1000 °C.

In regard to the dissolution procedure, the fuel structural materials could be divided into three different classes.

- For normal stainless steel types with 8-15 wt.% Ni such as : AISI 309 SCB, 304 L, 316 L and 431 the Sb-Cu 10 % solvent alloy performs best.
- For stainless steels with 15-25 wt.% Ni such as the 310 type the Sb-Cu (15 %) solvent alloy would be more adequate.
- For higher Ni alloys (>40 wt.% Ni) such as type 330 the Sb-Cu (23.5 %) solvent alloy is recommended.

This difference in dissolution rates could have practical consequences. If the fuel element is composed of two different structural materials for examp 304 L, for the cladding and 330 Ni alloy for the hexagonal wrapper, a prefer tial and fast dissolution of the cladding could be obtained with the Sb-Cu (10 %) solvent alloy leaving the hexagonal wrapper practically undissolved. Therefore the two parameters : temperature and solvent alloy composition off a great deal of flexibility and make the dissolution process more versatile almost independent of the nature of the structural material.

DISSOLUTION MECHANISM

Fig. 11 shows two samples of a cylindrical bar Ø 10 mm stainless steel 304 before and after dissolution. The bar was rotated (15 rpm) and continuously lowered into the solvent bath.

Fig. 12 shows a metallographic view of a stainless steel 304 sample in the early dissolution stage. There exists a progressing front of the liquid metal solvent into the austenitic stainless steel phase. Sb-Cu penetrates along the grain bounderies and the picture looks much like an intergranular corrosion. Thi way, individual grains are detached from the main austenitic body and are carried away in the agitated liquid metal stream and finally are dissolved completely.

Therefore the mechanism proceeds in three steps as illustrated in Fig. 13.

- At the start, there exists an intergranular diffusion of the solvent alloy which is strongly temperature dependent. This phenomenon is not significant before the temperature reaches 850 to 900 °C.
- The individual grains are partially dissolved around their boundaries, but the dissolution stops as soon as the saturation point is reached. At this moment the grains are detached from austenitic body through the eroding effect of the solvent alloy stream.
- Once the grains are completely free and removed from the interface, they will be quickly dissolved in the non-saturated solvent alloy.

This diffusion erosion dissolution mechanism emphasizes the necessity of agitating the solvent alloy.

METALLOGRAPHY

In order to reach a good phase separation between the irradiated fuel pellet and the stainless steel saturated solvent alloy, this latter must be homogeneous. Any precipitation of intermetallic compounds should therefore be avoided.

We examined therefore the Sb-Cu ingots with variable stainless steel additi Samples were taken at the top, in the middle and at the bottom of the ingots. T was no apparent difference between the samples.

Fig. 14 represents a micrograph from a Sb-Cu (23.5 %) sample in which 25 wt.% of 304 stainless steel was dissolved at 900 °C. The structure is comple homogeneous and free of any intermetallic precipitation.

Fig. 15 represents a micrograph of Sb-Cu (23.5 %) sample in which 37 wt.% o 304 stainless steel was dissolved at 900 °C.

This sample was submitted to a microprobe analysis for identification of th different solid phases. The results are given in Table IV.

Four different structures have been identified.

- A dendritic structure of black colour corresponding to a first solidificati which is composed mainly of Fe and Cr. This intermetallic compound of Fe-C is however present in a very small amount and its distribution in the sampl is rather uniform. It should not be of great concern for the fuel separati
- A white globular structure of second solidification with Sb as a major component (60.3 %) and Fe, Cr, Ni in normal proportions but poor in Cu.
- A white intergranular structure surrounding B with only 46.9 % Sb and 15.75
- A dark intergranular structure also surrounding B, rich in Cu (38.26 %) and Ni (4.6 %) bu with almost no iron.

This microprobe analysis confirms that Fe and Cr dissolve preferentially in a Sb-rich phase and that Ni has a preference for the Cu-rich phase. Other metallographic examinations have shown that a Sb-Cu 10 % sample loaded with even 64 wt.% of 304 stainless steel did not show any major inhomogeneity.

Only the first solidification structure of Fe-Cr was more abundant, but stil homogeneously distributed.

Fig. 15 represents a micrograph of the interface solvent alloy - PuO_2.

The purpose of this text was to show that no chemical interaction would occur between the fuel and the solvent alloy. Therefore, a PuO_2 sample was immersed int the solvent alloy for 5 h at 900 °C. No chemical reaction could be detected, as is also evident from the micrograph.

PRACTICAL CONSIDERATIONS AND CONCLUSIONS

In the more general description of the liquid metal decanning process, as given above, the emphasis was laid on the investigation of the fundamental aspects of the problem. A technological description of the details associated with scalin up problems will be the purpose of another paper.

However, a conceptual flow sheet of the liquid metal decladding is summarized in Fig. 16. The unit steps are carried out in the following order. After a cooling period of at least 30 days, the fuel element is introduced directly into the decladding furnace which contains already the molten solvent alloy. In some cases a molten salt flux on top of the solvent alloy might be useful. Once the stainless steel structural material has been dissolved, the fuel pellets are separated from the molten solvent alloy by filtration on porous graphite.

Finally the declad fuel is transferred to the processing plant either aqueous or non aqueous.

Inside the framework of this flow sheet, many orientations are still possible

- decladding on the reactor site ;
- decladding at the reprocessing plant ;
- decladding coupled with an extended pyrochemical head end.

Whatever the orientations will be, there are some inherent problems which mus be considered in every case :

- the heat flux generated from the fuel element (possibly 50 kW/fuel element) ;
- the presence of fission gases under pressure (evaluated to 80-100 kg cm^{-2}) ;
- the presence of Na either attached or locked inside a damaged pin ;
- the criticality problem due to the high plutonium content once the geometry of the fuel element is destroyed.

As far as the dissolution procedure is concerned two ways are possible :

- the progressive immersion under rotation of the fuel element into the molten solvent alloy with complete dissolution of all structural material and separation of the liberated fuel by filtration ;
- dissolution of the cladding material only, leaving the hexagonal wrapper practically undissolved, in this case the solvent alloy would be pushed by gas pressure inside the "wrapper".

The latter case would have our preference since the fuel will be cooled by the liquid solvent alloy during dissolution ; furthermore since only the cladding is dissolved our furnace charge could be used for two dissolutions before saturation is reached and consequently the solid waste will be reduced.

- Na problem

  With liquid metal decladding, Na removal either inside or outside the fuel element is not necessary. Preliminary laboratory experiments have shown that Na will be dissolved in the molten solvent alloy (1-2 wt.%). Therefore the fuel element can be transferred directly from the storage tank into the decladding furnace and a costly Na removal equipment is not necessary.
  On the other hand the already mentioned salt flux could also provide an answer for Na removal. A halide slagging with a properly chosen molten salt such as e.g. $PbCl_2$ (+NaCl) would remove all metallic sodium according to the following equation

$$PbCl_2 + Na \longrightarrow NaCl + Pb$$

- Heat removal problem

  Heat removal during dissolution will be assured partially by the molten solve alloy itself and if necessary also by the molten salt flux. Therefore it is obvious that the dissolution furnace must be provided with a very efficient temperature regulating system. Beside the heating device which could be base on low frequency induction heating, an appropriate cooling device would be desirable.

- Fuel separation

  After canning dissolution, the fuel must be properly separated from the molte solvent alloy. Losses of the highly valuable UO_2-PuO_2 fuel are note tolerabl The technique considered is a simple filtration of the solvent alloy on porou graphite filters. This was successfully tested in the Ispra Laboratory equipment with small dummy stainless steel clad UO_2 fuel elements.
  Further experimenting is still necessary to optimize the filtration process. The wetting properties of the solvent in regard to its stainless steel conten must also be examined more thoroughly.
  A more practical approach to the fuel separation problem could be the followi before the actual filtration is started the "bulk" of the UO_2-PuO_2 is retracted from the molten solvent alloy by means of a perforated basket leavi only the fines for filtration. This way the heat problem would be eliminated from the filtration equipment and the "bulk" fuel could be transferred in its basket directly to the acid dissolver.

Preliminary experiments have already shown that Tu or Ta could be a satisfact material for the perforated basket. A research programme is still going on to fi an economic structural material which does not dissolve in the solvent alloy.

SUMMARY

From the results obtained in the laboratory stage we conclude that the liquid metal decanning process with the Sb-Cu solvent alloy is well feasible for decladd of ceramic type fast breeder short-cooled fuels. In regard to the various cannin materials the process offers a great deal of flexibility going from the classical stainless steels to the higher nickel alloys.

The decladding equipment e.g. the dissolution furnace will be very compact and if necessary it could even be set up on the reactor site. Sodium removal and dismantling of the fuel element prior to decladding is not necessary, and this is a major plus point compared to other methods.

The high dissolution rates, a fast kinetic and the yield of a concentrated solid waste, guarantee optimum operating conditions.

Finally the Sb-Cu decanning process is a universal head end adaptable as well to aqueous as to non aqueous processing.

ACKNOWLEDGEMENTS

The authors are indebted to Mr J. Borda for his valuable contribution in the laboratory experiments and Mr Stoppa for the micrographs.

They appreciated also the contribution of Dr D. Quataert and J. Lemaitre for the microprobe analyses.

REFERENCES

(1) R. GIBRAT, J. GAUSSENS, F. LICHTENBERGER
Programme et économie des réacteurs rapides
Bulletin A.T.E.N. No. 65, 1967.

(2) F. SEBILLEAU
Fabrication des combustibles et retraitement
Bulletin A.T.E.N. No. 64, 1967.

(3) Argonne National Laboratory, Report No. 7450
Chemical Engineering Division.

(4) G.P. NOVOSELOV and col.
36ème Congrès International de Chimie Industrielle,
Bruxelles 1967.

TABLE I

Detection of binary solvent alloys

		MINOR COMPONENT < 50 wt.%			
		Sb	Al	Cu	Mn
MAJOR COMPONENT > 50 wt.%	Sb		◐	●	●
	Al	◐		●	⊗
	Cu	⊗	⊗		◐
	Mn	⊗	⊗	⊗	

● BINARY ALLOYS ; VERY FAVOURABLE

◐ BINARY ALLOYS ;FAVOURABLE WITH RESTRICTIONS

⊗ REJECTED BINARY ALLOYS

TABLE II

Results : Dissolution rates of 304 L stainless steel

Solvent Sb-Cu (10 % Cu)						Solvent Sb-Cu (15 % Cu)						Solvent Sb-Cu (23,5 % Cu)					
850 °C		900 °C		1000 °C		850 °C		900 °C		1000 °C		850 °C		900 °C		1000 °C	
Time min	Rate wt.%	Time min	Rate wt.%	Time min	Rate wt.%	Time min	Rate wt.%	Time min	Rate wt.%	Time min	Rate wt.%	Time min	Rate wt.%	Time min	Rate wt.%	Time min	Rate wt.%
4	20	2	26,2	2	31.1	4	8	2	17,2	4	32.5	8	13.8	8	29.3	7	33
8	29,8	6	37	4	42.1	8	21.8	5	31	7	40,2	18	20	18	32.7	9	36
14	32.4	10	42	7	48.6	12	22,2	10	33.4	12	44,3	36	30.7	31	34.5	19	37.8
18	38	18	42	11	54.3	20	28,2	20	36.8	20	49	64	31,7	46	36.5	24	40.75
24	38			15	56.6	30	30,2	30	36.8	35	54.8						
				22	60.6	60	33.6			53	57.2						
				32	61.4												

TABLE III

Results : Dissolution rates at 1000 °C of different stainless steel types

Stainless steel AISI	Sb-Cu 10 %		Sb-Cu 15 %		Sb-Cu 23,5 %	
	Time min	wt.% dissol.	Time min	wt.% dissol.	Time min	wt.% dissol.
309 SCB	1	21	1	21		
	3	38.5	3	36.5		
	6	52	8	45.5		
	10	58.5				
	20	66.25				
310 S			3.5	29,75	3	24,5
			8,5	41,25	8	30,5
			13,5	47,25	18	40,7
			33,5	57.5	30	43,5
					45	46.25
304 L	1	20	1	17,75		
	3	35,25	3	32,75		
	6	43,75	6	41		
	10	52,5	10	47		
	20	57,75	20	51,5		
330	5	3,75	4	13	5	7,5
	15	14,25	14	22,5	15	28,75
	30	19,25			25	40,75
310	3	4,25			3	4,25
	8	16,25			8	9,5
	18	24,5			18	25
	30	26,5			30	31,5
	45	32,75			45	32,25
	60	38,25			65	46,25
	75	41			85	53,75
420	3	7,25	5	8,7		
	8	14,75	15	16,25		
	19	25.25	38	34.75		
	31	39,25	68	40,2		
	46	47,26				
	66	55				
431	3	21,5				
	8	33,75				
	18	50,5				
	28	57,5				

TABLE IV

Results of the microprobe analysis
(Micrograph of Fig. 15)

	Fe %	Cr %	Ni %	Cu %	Sb %
Structure A First solidification	70	14	0.61	0.64	2.63
Structure B Second solidification	14	3.5	2.19	4.28	60.5
Structure C Intergranular surrounding B (clear)	14.9	2.15	1.23	15.75	46.9
Structure D Intergranular surrounding B (dark)	0.5	1.14	4.61	38.26	40.6

P.S. THE MICROPROBE ANALYSES ARE A CONTRIBUTION FROM Dr D. QUATAERT AND J. LEMAITRE OF THE METALLURGY DIVISION EURATOM ISPRA

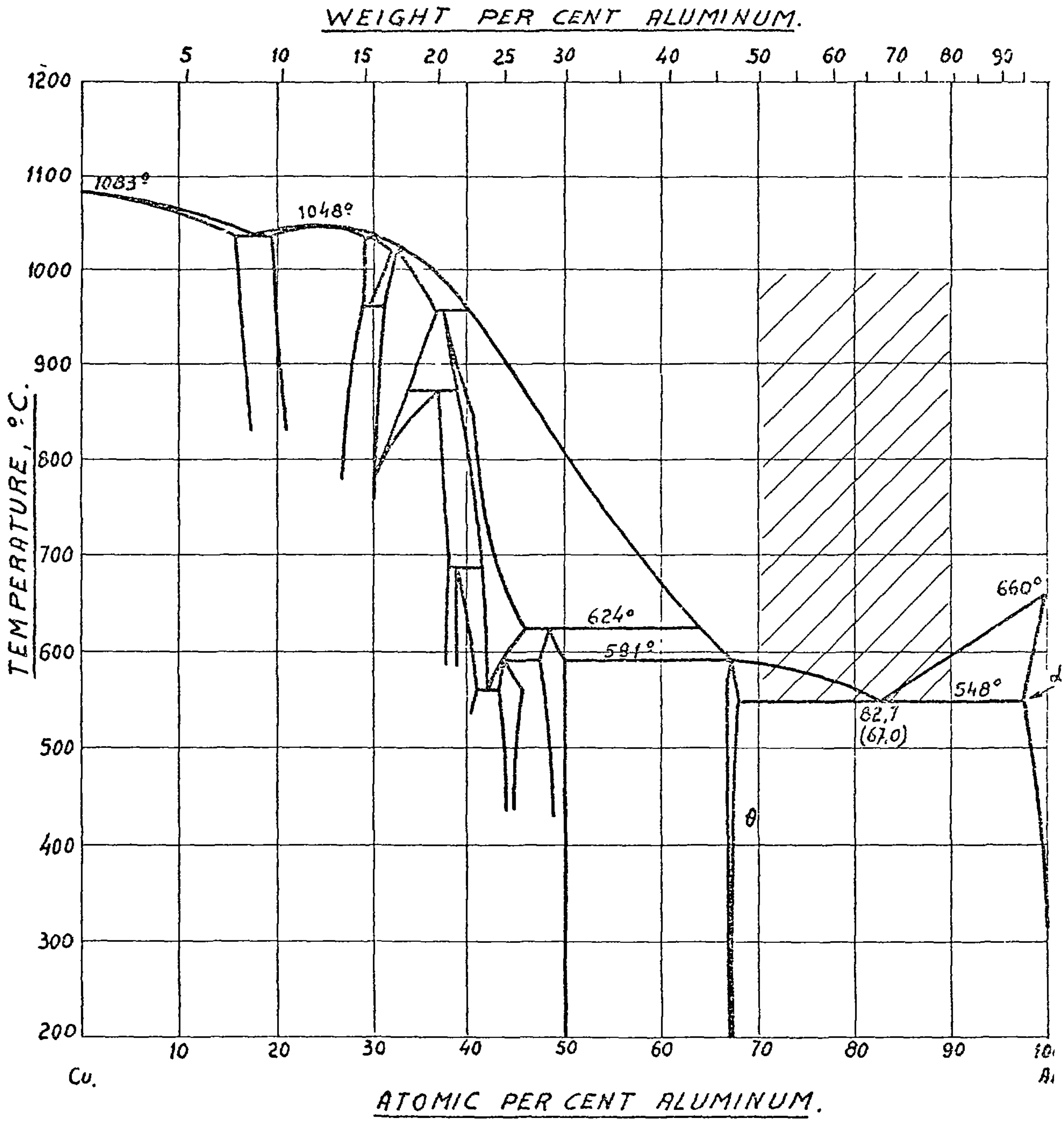

PHASE DIAGRAM AL-Cu.

Fig: 1.

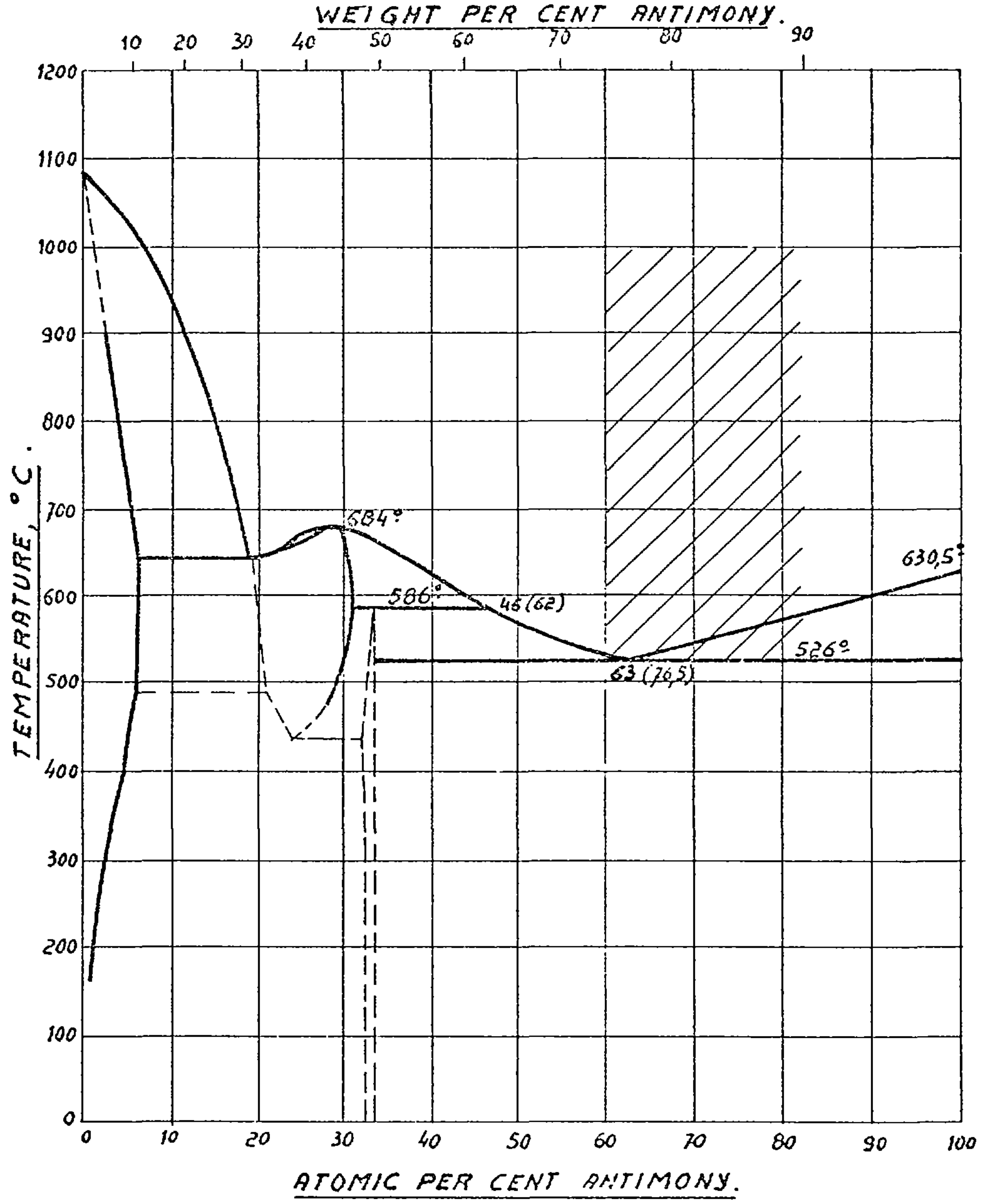

PHASE DIAGRAM Sb-Cu.

Fig: 2.

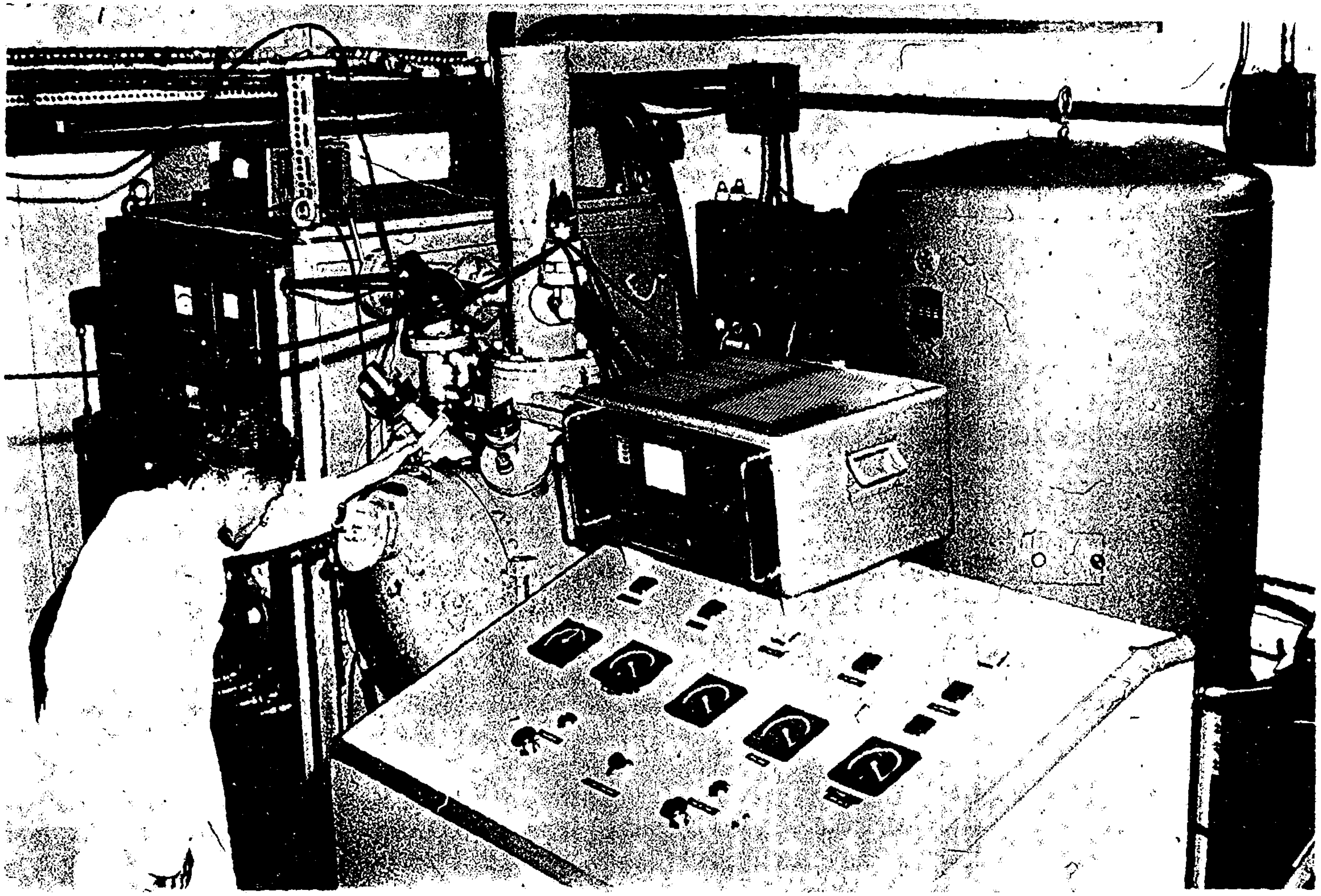

FIG. 3 : PHOTOGRAPH OF THE HERAEUS VACUUM FURNACE

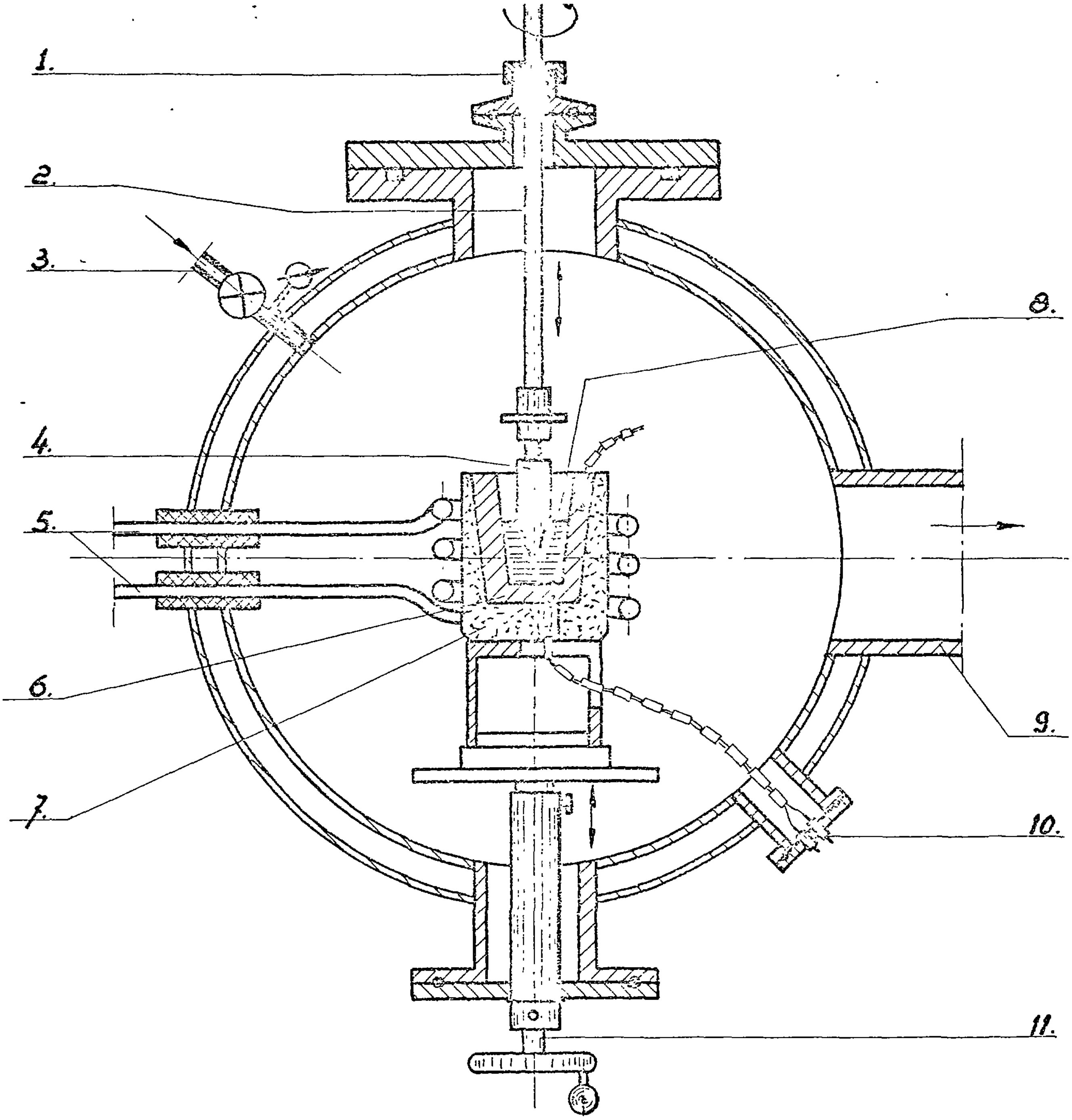

EXPERIMENTAL SETUP

1. Joint
2. Rotating bar
3. Valve ; Argon inlet
4. Sample (stainless steel)
5. Inductor (10 k Hz)
6. Graphite crucible
7. Refractory crucible
8. Liquid metal solvent alloy
9. Connection to vacuum pump
10. Thermocouple
11. Vertical adjustment

FIG. 4

FIG. 5 STAINLESS STEEL BARS BEFORE AND AFTER DISSOLUTION

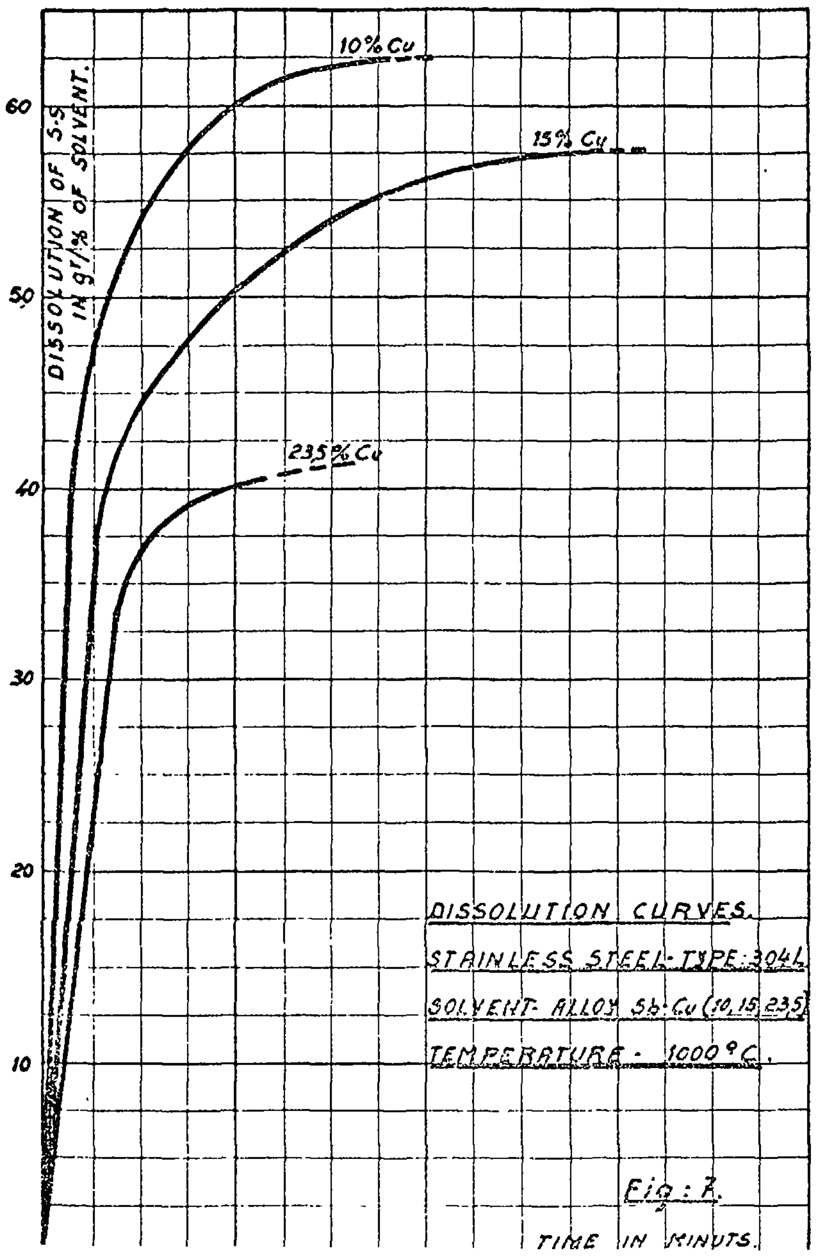
DISSOLUTION OF S·S IN gr/% OF SOLVENT.
60
50
40
30
20
10
10% Cu
15% Cu
23.5% Cu
DISSOLUTION CURVES.
STAINLESS STEEL-TYPE: 304L
SOLVENT-ALLOY Sb·Cu (10,15,23.5)
TEMPERATURE - 1000°C.
TIME IN MINUTS.

Fig: 7.

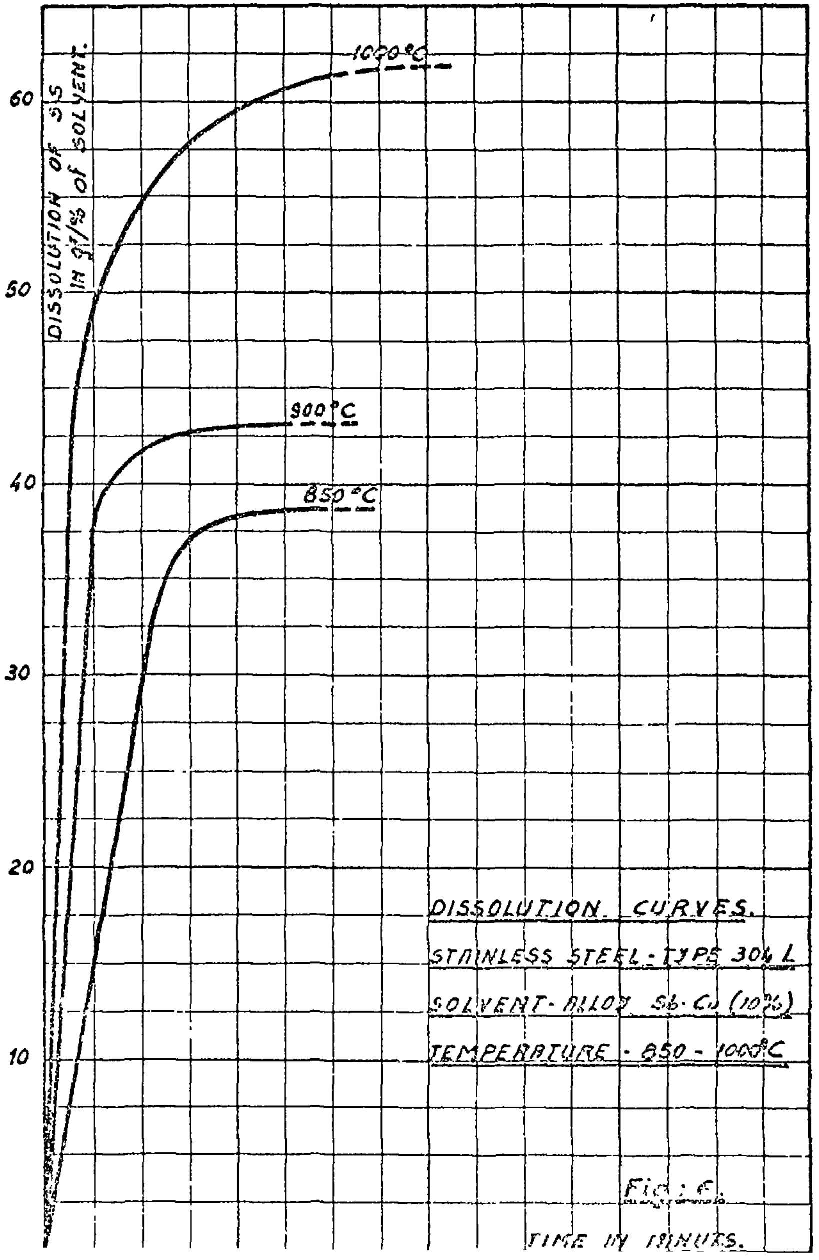
DISSOLUTION OF S·S IN gr/% OF SOLVENT.
60
50
40
30
20
10
1000°C
900°C
850°C
DISSOLUTION CURVES.
STAINLESS STEEL-TYPE 304 L
SOLVENT-ALLOY Sb·Cu (10%)
TEMPERATURE - 850 - 1000°C
TIME IN MINUTES.

Fig: 6.

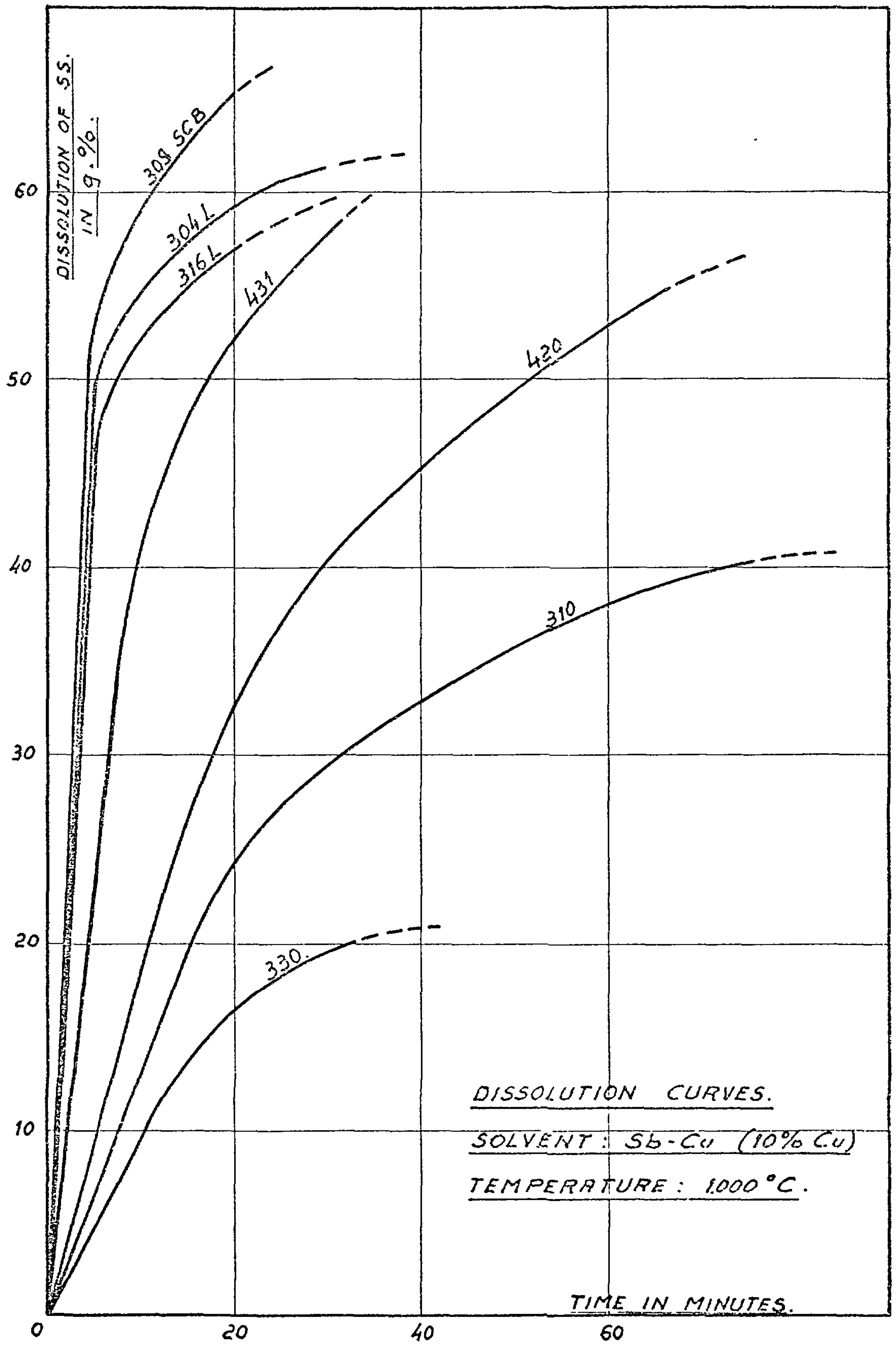
DISSOLUTION OF S.S. IN g.%.
309 SCB
304 L
316 L
431
420
310
330.
DISSOLUTION CURVES.
SOLVENT : Sb-Cu (10% Cu)
TEMPERATURE : 1000 °C.
TIME IN MINUTES.
60
50
40
30
20
10
0
20
40
60

Fig: 8.

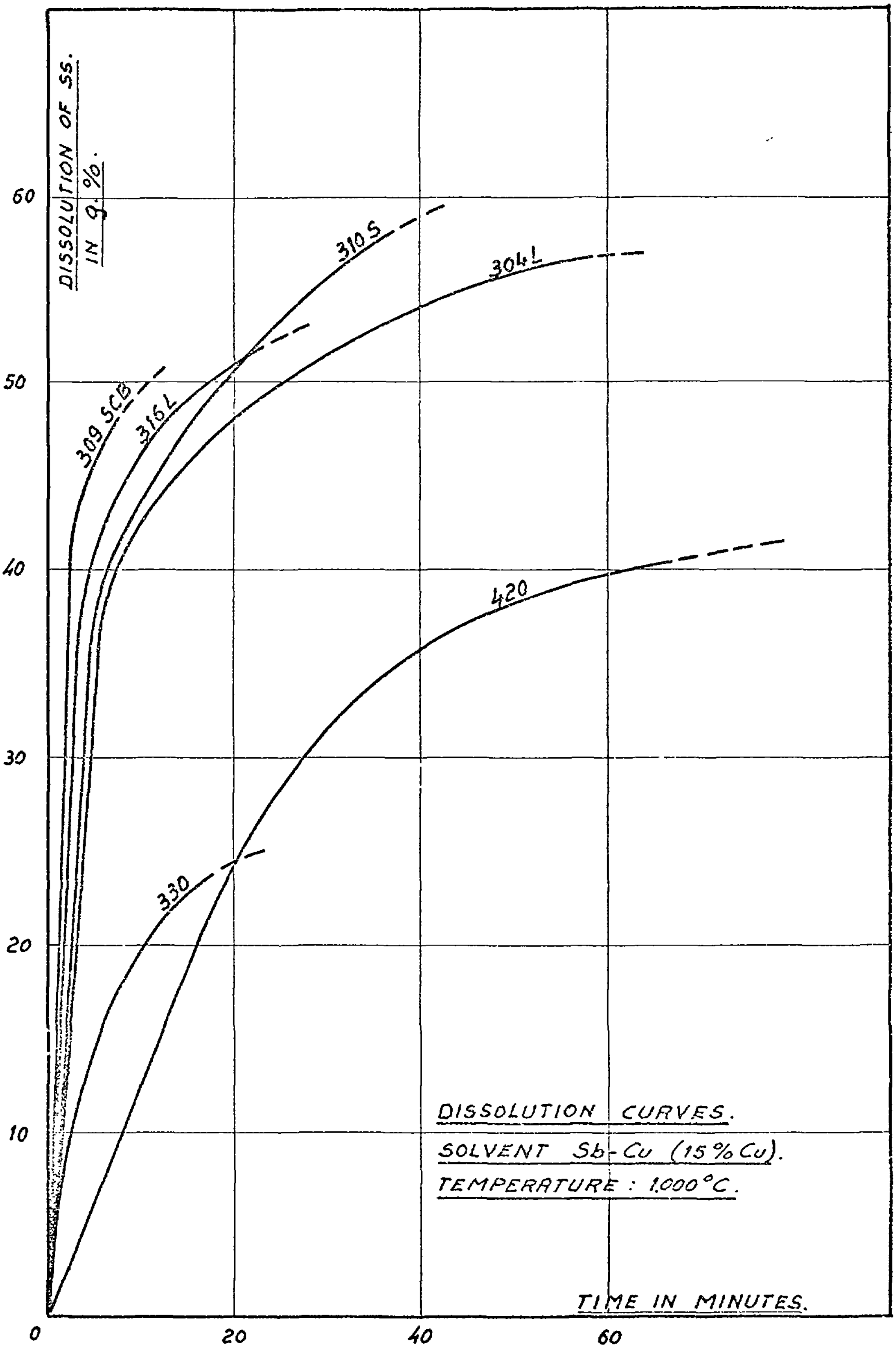
DISSOLUTION OF SS. IN g. %.
60
50
40
30
20
10
0
20
40
60
310 S
304 L
309 SCB
316 L
420
330
DISSOLUTION CURVES.
SOLVENT Sb-Cu (15 % Cu).
TEMPERATURE : 1.000°C.
TIME IN MINUTES.

Fig : 9.

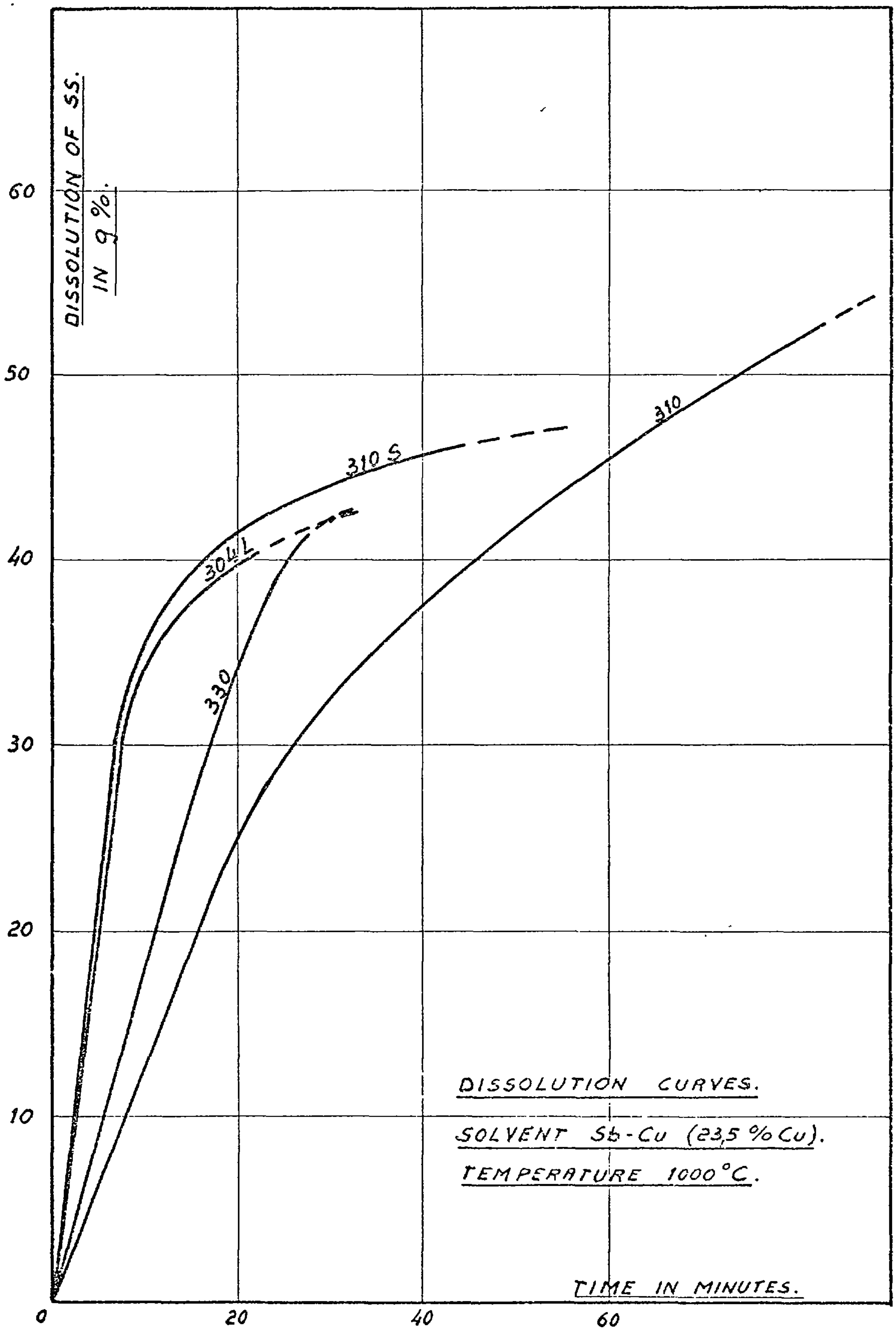
DISSOLUTION OF SS. IN g %.
60
50
40
30
20
10
0
20
40
60
TIME IN MINUTES.
310 S
304 L
330
310
DISSOLUTION CURVES.
SOLVENT Sb-Cu (23,5 % Cu).
TEMPERATURE 1000 °C.

Fig: 10.

FIG. 11 MICROGRAPH OF THE INTERPHASE SOLVENT ALLOY - STAINLESS STEEL
Magnif. 210 X

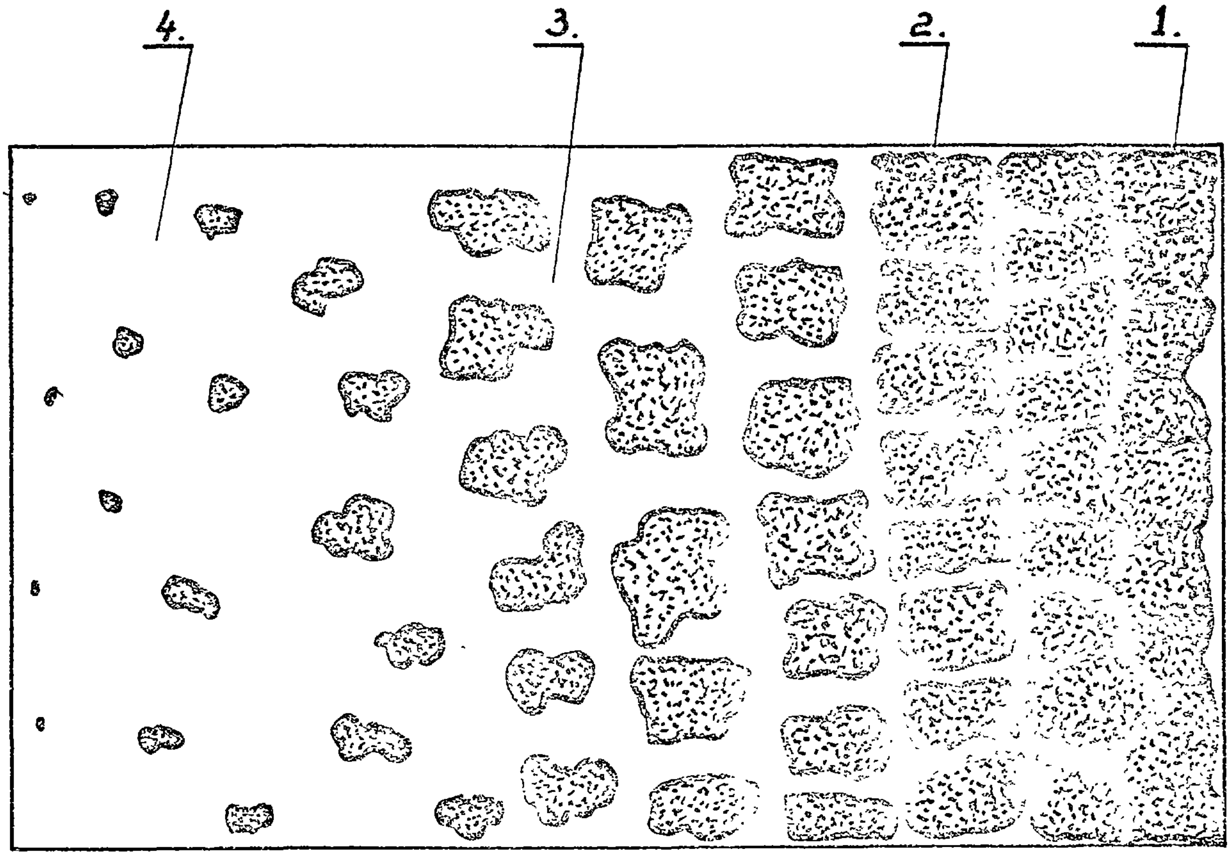

1. STAINLESS STEEL AUSTENITIC STRUCTURE
2. INTERGRANULAR DIFFUSION ZONE
3. EROSION ZONE
4. LIQUID METAL SOLVENT ALLOY

SCHEME OF DISSOLUTION MECHANISM

Fig. 12

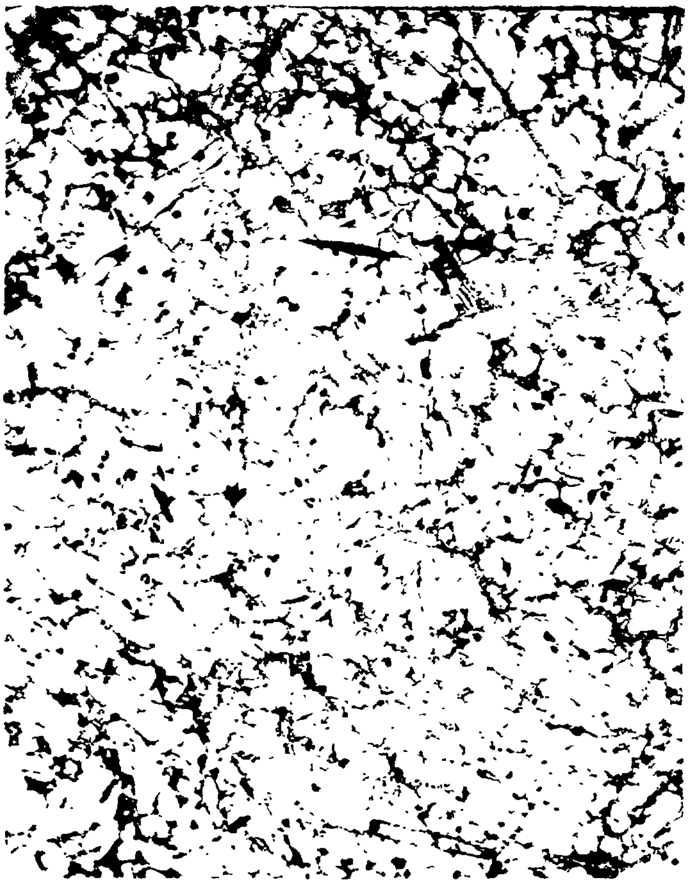

FIG. 13 MICROGRAPH OF A SAMPLE Sb-Cu (23,5 %) WITH 25 wt % STAINLESS STEEL

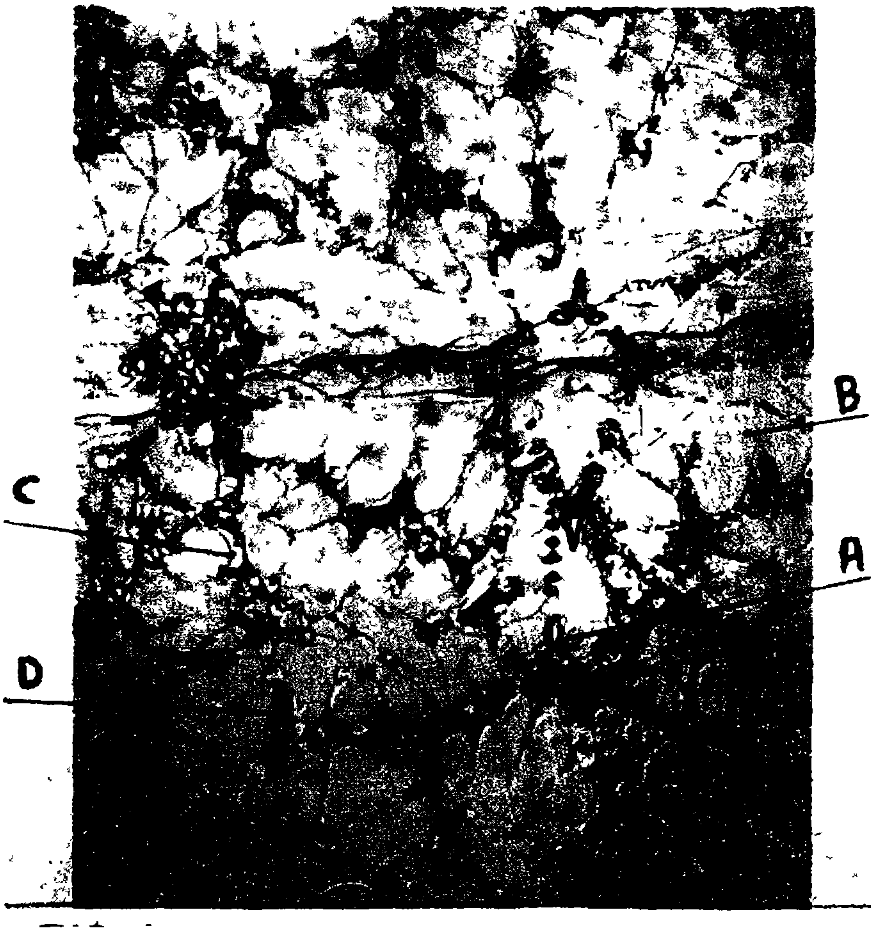

FIG. 14 : MICROGRAPH OF A SAMPLE Sb-Cu 23,5 % WITH 37 wt % STAINLESS STEEL

SPOTS AT A, B, C, D HAVE BEEN SUBMITTED TO A MICROPROBE ANALYSIS

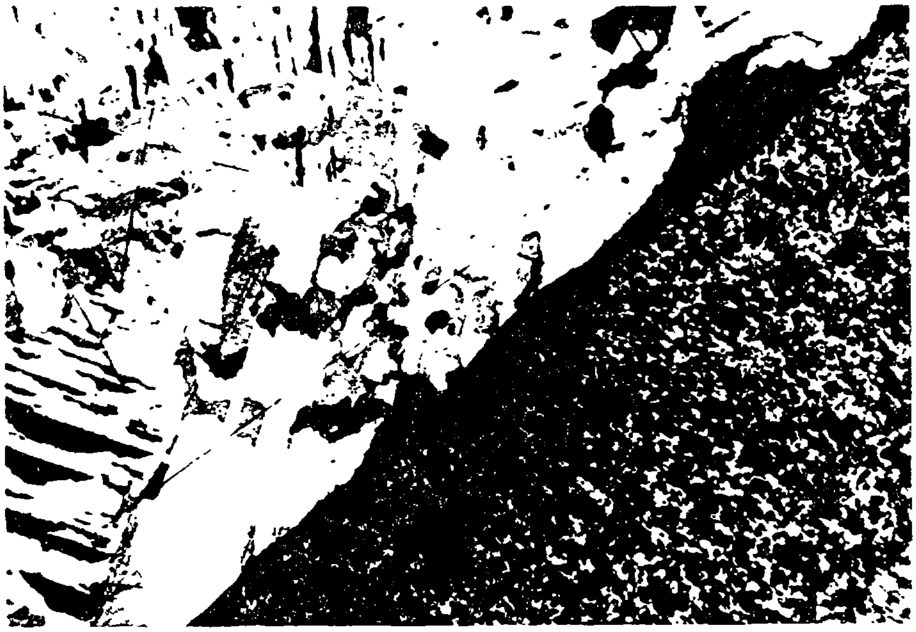

FIG. 15 MICROGRAPH OF THE INTERFACE SOLVENT ALLOY - PuO_2

Fig. 16 LIQUID METAL DECLADDING CONCEPTUAL FLOW SHEET

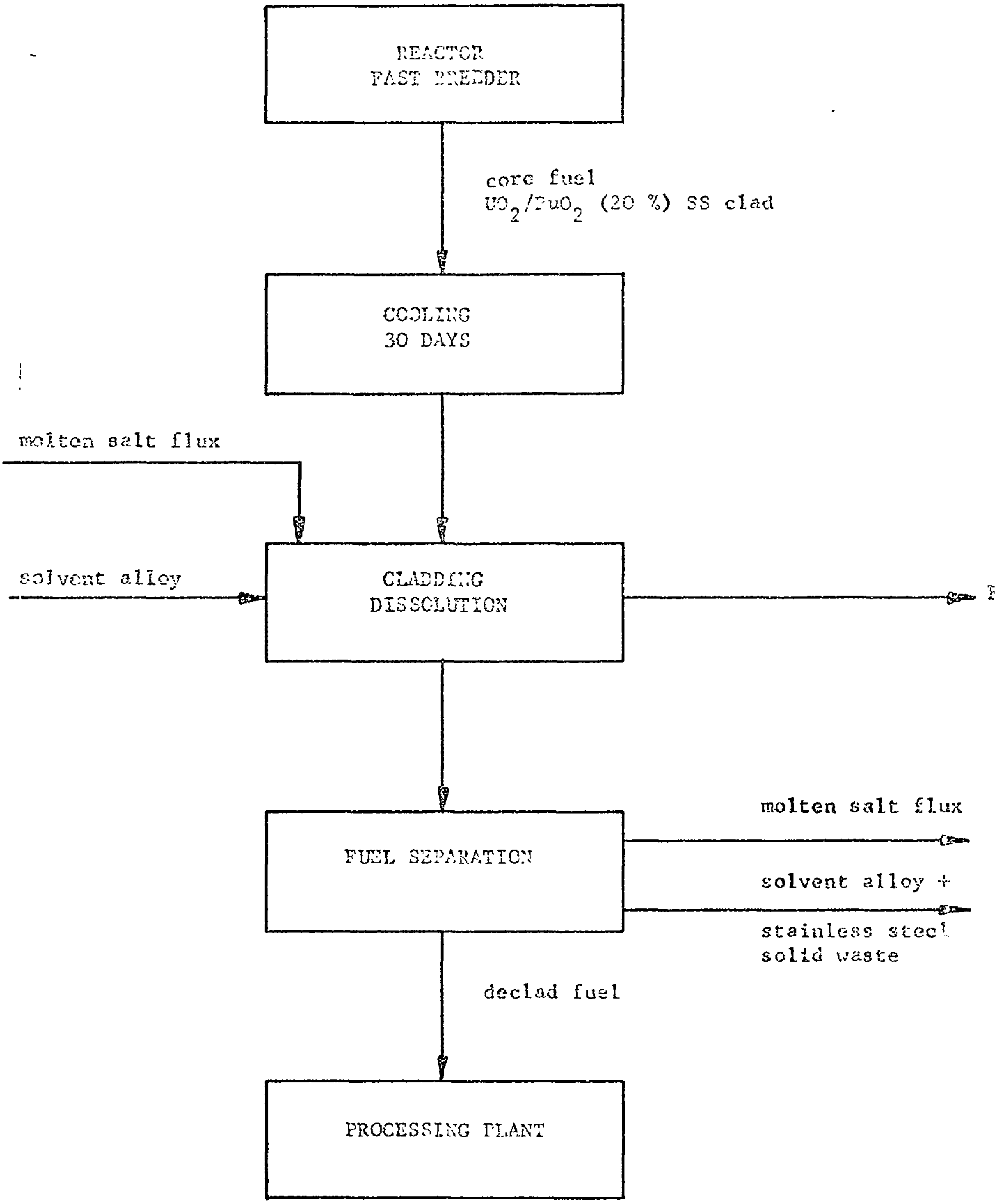

DEVELOPMENT OF REPROCESSING PROCEDURES FOR THORIUM-CONTAINING FUEL ELEMENTS

E. Fischer, G. Kaiser, M. Laser, E. Merz, H.J. Riedel and H. Witte

KERNFORSCHUNGSANLAGE JÜLICH GMBH
Institut für Chemische Technologie
517 Jülich/Germany

Abstract

Three different reactor conceptions are presently considered for application in the thorium-uranium cycle, the high temperature gas-cooled thorium reactor, the heavy water moderated thorium reactor and the molten-salt thorium breeder. For each of them suitable reprocessing procedures have to be developed, at which in the individual process steps frequently similar or even identical problems exist. They are different however in the head-end-step.

Work performed at the Kernforschungsanlage Jülich GmbH (KFA) is directed towards the development of suitable reprocessing procedures for the graphite fuel elements of HTG-reactors as well as for the metal-canned fuel elements considered for the planned heavy-water moderated thorium reactor.

The fuel elements of HTG-reactors require a special head-end-step, because of the fact that a considerable amount of the moderator graphite is introduced into the actual reprocessing, and in addition by the use of coated fuel particles with their chemically extremely resistant coatings of pyrocarbon or silicon carbide.

Two different approaches are investigated and developed at the KFA-Jülich, the burning of the graphite and pyrocarbon, respectively, in a fluidized bed without the addition of alumina, and the chlorination of the fine ground fuel elements with chlorine in a fluidized bed reactor at temperatures between 800 and 1000°C.

Work performed under a joint project sponsored by the German Federal Ministry of Science

The volatilized chlorides of thorium, uranium and most fission products are condensated and further separated and purified by solvent extraction. Also the sparingly soluble thorium-uranium oxides, obtained in the case of removing the graphite by combustion are dissolved in a potassium pyrosulphate melt and their aqueous solutions further treated by solvent extraction. Prior to the solvent extraction step, the protactinium present in the feed solution is removed by a selective adsorption technique. Then, the solution is concentrated by evaporation, during which the thorium is completely precipitated as the potassium sulphatothorate; it can be separated from the uranium solution and directly stored as medium level waste.

Introduction

The chemical reprocessing of irradiated reactor fuel is part of the nuclear fuel cycle and therefore closely connected to the respective reactor design. In the course of the German Atomic Program, the Kernforschungsanlage Jülich GmbH (KFA) is engaged in close cooperation with several industrial companies with the development of advanced power reactors on the basis of the thorium-uranium fuel cycle. The inclusion of this reactor design into the long-termed energy program is based upon the idea that in order to secure the nuclear fuel supply, the breed-material resources of thorium must be employed as well. Three different reactor conceptions are presently considered for application in the thorium-uranium cycle:

1. the gas-cooled graphite-moderated high temperature thorium reactor (HTGR), as the most important and technically most advanced representative at the present time,
2. the heavy water moderated thorium-reactor, and
3. the thorium molten-salt breeder-reactor, whose development however is still at the beginning.

For each of these three types suitable reprocessing procedures have to be developed, at which in the individual process steps frequently similar or even identical problems exist.

For the HTGR and the heavy water moderated thorium-reactor a distinction exists only in the first processing step, the head-end. A complete new development is needed here for the fuel elements of HTG-reactors, due to the fact that a considerable amount of the moderator graphite is introduced into the actual reprocessing, and in addition by the use of coated particles with their chemically extremely resistant coatings. For the metal-canned fuel elements of the heavy water moderated reactor the well-approved shear-leach process will be applied. No head-end is needed at all for the molten-salt reactor, because their feed and breed-material is present already in a dissolved state in the salt-melt. In this particular case however, reprocessing by an aqueous route is prohibited, here only non-aqueous and hitherto hardly tested high temperature processes, especially fluorination, may be applied.

In the Federal Republic of Germany the first HTGR-generation is expected to be operable in the middle of the seventies (1). If one intends to guarantee a complete fuel cycle to the future reactor users, appropriate procedures for the reprocessing of spent fuel elements must be evolved in time. Therefore, already in 1966 the project "Wiederaufarbeitung bestrahlter Kernbrennstoffe aus Thoriumreaktoren" was inaugurated by the German Federal Ministry of Science. The results and experience gained to date indecate that in the first reprocessing period only a wet chemical process such as solvent-extraction can satisfactorily separate the feed and/or breed-material from the fission products. This conclusion is not surprising since in 25 years' of experience in reprocessing, only extraction processes have been practical on an industrial scale.

Short Survey of Thorium-Reprocessing Project Program

The outline of the present research and development program of the project is characterized by the following three main points:

1. development of suitable head-end processes for graphite-based fuel elements from gas-cooled high-temperature reactors;
2. elaboration and testing of aqueous separation and purification procedures on the basis of solvent extraction, and
3. reprocessing by a nonaqueous route, e.g. by fluoride volatilization.

A survey of the complete project program is given in table 1.

Table 1: Survey of Project Program for Reprocessing Thorium-Containning Fuel-Elements

Type of Process	Treated by	Process-Steps
Technical most advanced processes (THOREX and INTERIM-23)	NUKEM GmbH	Burning of HTGR fuel elements in a shaft-furnace
	Farbenfabriken Bayer AG	Off-gas treatment and purification
	Farbwerke Hoechst AG	Dissolving of burning residues in THOREX-reagent
	KFA-Jülich GmbH	Isolation of ^{233}Pa by an adsorption technique
	Farbwerke Hoechst AG	Aqueous solvent extraction with tri-n-butylphosphate
	KFA-Jülich GmbH	Grind-burn-leach process for SiC-coated fuel particles
KFA-TBP 23/25-Process	KFA-Jülich GmbH	Burning of crushed HTGR-fuel-elements in a fluidized solids furnace Dissolution of resulting mixed-oxide particles in a $K_2S_2O_7$-melt
		Isolation of ^{233}Pa by an adsorption technique
		Concentrating with thorium-preseparation and feed-adjustment
		Aqueous uranium-extraction-cycle with tri-n-butylphosphate (and possibly long chain amines
	Farbenfabriken Bayer AG	(Off-gas-treatment)
Combined dry chlorination and aqueous solvent-extraction process (CHLOREX)	KFA-Jülich GmbH	Mechanical crushing and grinding of HTGR fuel elements
		Chlorination in a fluidized-bed reactor with chloride condensation
		Dissolution in water and adsorptive protactinium isolation
	Gelsenkirchener Bergwerks-AG	Aqueous separation and purification by solvent extraction with TBP or long chain tertiary amines
Extended head-end alternative	Fried. Krupp GmbH	High-temperature treatment of HTGR fuel elements in an induction furnace at 2500 to 3000 °C Chlorination of the resulting products and chloride condensation
Reprocessing by fluorination	Farbenfabriken Bayer AG	Fused-salt fluoride volatility process
	Kali-Chemie AG	Solid-state fluoride volatility process

bed reactor. The continuous loading and unloading of feed and breed elements has the highest economical efficiency only if the fuels can be reprocessed immediately after being discharged from the reactor.

Outline of the Process

Based on the above considerations the flowsheet shown in figure 1 was developed.

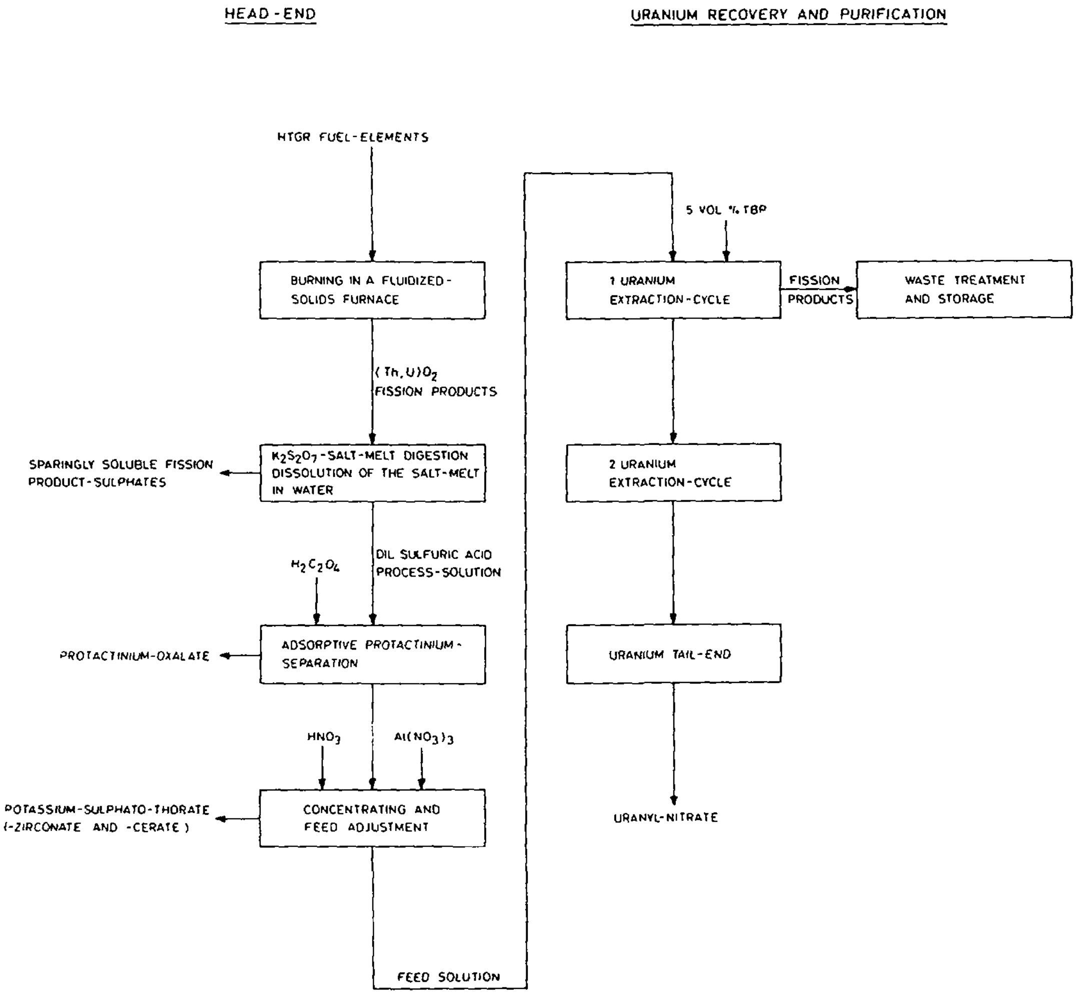

Figure 1: KFA-TBP 23/25-Process; Schematic Process-Flowsheet

This paper deals with the description of two flowsheets developed by KFA, that means the KFA-TBP 23/25-Process and the CHLOREX-Process.

KFA-TBP 23/25-Process

Process-Philosophy

In planning the KFA-TBP 23/25-process we have been guided by the following considerations:

1. Fuel elements for high-temperature gas-cooled reactors consist of pyrolytic carbon coated uranium and/or thorium carbide or oxide particles dispersed in a graphite matrix. On a technical scale the removal of all of the carbon, that means the structural graphite as well as the coating, appears feasible only by burning.

2. Mixed oxides should be preferable as the fuel particles because of cheaper production and better behaviour under reactor conditions than the carbides. Their strong chemical resistance against the only known dissolving agent, F^--catalysed nitric acid, may require the application of a technologically advanced solubilizing procedure.

3. The main part of the process, the solvent-extraction, shall be a TBP-procedure. Only when using the "classic" extraction medium whose technology has already been thoroughly investigated, will the setting up of a total process line be possible in the near future.

4. For the present, an isolation of decontaminated thorium can be renounced. The small share of the cost of the thorium on the complete fuel cycle makes it advisable to store the used thorium until most of the ^{228}Th has decayed.

5. The process should be capable of treating fuel elements after short cooling periods. Therefore, a process step for the recovery and purification of the relatively long-lived ^{233}U-precursor, ^{233}Pa, has to be provided. This point is particularily important with regard to the reprocessing of fuel elements from the pebble-

In the first step the crushed fuel elements are burned in a fluidized-solids furnace at temperatures between 700 and 850°C.

The remaining thorium-uranium mixed oxide particles are then dissolved in a potassium pyrosulphate melt. After the reaction has been finished, the liquid melt will pneumatically be pushed out of the crucible and poured into the requisite amount of water necessary for dissolution.

Insoluble fission product sulphates, principally barium- and strontium sulphate, are separated by a cyclone separator or by filters and the clear solution is then passed over a vycorglass-column to remove the protactinium still present in equilibrium.

The resulting protactinium-free fuel solution of a now reduced specific activity level will be concentrated and adjusted to TBP-extraction conditions by adding nitric acid and aluminum nitrate. The uranium concentration of the feed solution amounts to 20 g/l; it is nearly free of thorium, because sparingly soluble potassium sulphatothorate is precipitated in the concentration step. Also its content of zirconium and cerium should have decreased considerably compared to the initial product solution, because like thorium both elements form sparingly soluble double salts with potassium sulphate.

The extractive separation and decontamination of the uranium with a solution of 5 vol % tri-n-butylphosphate in Kerosene is achieved in the first extraction cycle following a flowsheet specially designed for the present feed conditions.

For the second uranium extraction cycle the application of the published flowsheet designed for the TBP 25-process is projected; the same is intended for the uranium tail-end purification (2).

Experimental Results

HEAD-END

Combustion

The burning is the first choice of a suitable head-end process for graphite-based fuel elements. Besides the direct burning of the whole fuel spheres in a shaft furnace, the burning of the coarse ground fuel elements in a fluidized bed furnace seems to be advantageous (3, 4). We are concentrating our efforts at the KFA on this method and trying to avoid the somewhat cumbersome addition of alumina into the bed as a fluidizing agent. Hence, the otherwise arising difficulties caused by the partial separation and recycling of the alumina are avoided, as well as the ones in the dissolution of the combustion ash in THOREX-reagent.

In the burner off-gas, the rare gases are separated by a process requiring an off-gas composition which is highly constant and as low in O_2 and CO content as possible. Further, it is desirable to keep the combustion temperature low in order to avoid sintering of the combustion ash and extensive volatilization of fission products.

Laboratory experiments were performed in a small fluidized bed furnace with a diameter of 37 mm, 225 mm high; the upper enlarged part having a diameter of 76 mm and a height of 210 mm. For the retention of dusts, a porous metal-filter with a poresize of 20 µm was used. Applying a pneumatic joggle device, an improvement of the flowing properties of the fluidized bed could be obtained.

A laboratory hammer mill employed for the coarse grinding of the graphite fuel spheres gave the following grain-size distribution shown in table 2.

Table 2: Sieve analysis of graphite fuel spheres ground in a hammer mill (pressed synthetic fuel spheres, NUKEM GmbH)

Sieve size [mm]	1,6	1,0	0,63	0,32	0,16	0,10	0,05
Residue [%]	9,2	28,8	41,5	59,8	72,9	79,9	87,9

As our experiments revealed, this material exhibits satisfactory flowing conditions for a proper burning at a gas flow-rate between 60 and 180 litres STP per hour at 750°C.

To avoid local thermal hot spots close above the bottom flow plate in burning of graphite without the addition of Al_2O_3, which might cause sintering of the metal oxides and also increase the CO-content in the off-gas, the burning gas must be diluted with CO_2. This is achieved by refluxing part of the off-gas. The off-gas compositions measured for different O_2/CO_2-ratios at combustion temperatures between 750 and 850°C are shown in figure 2.

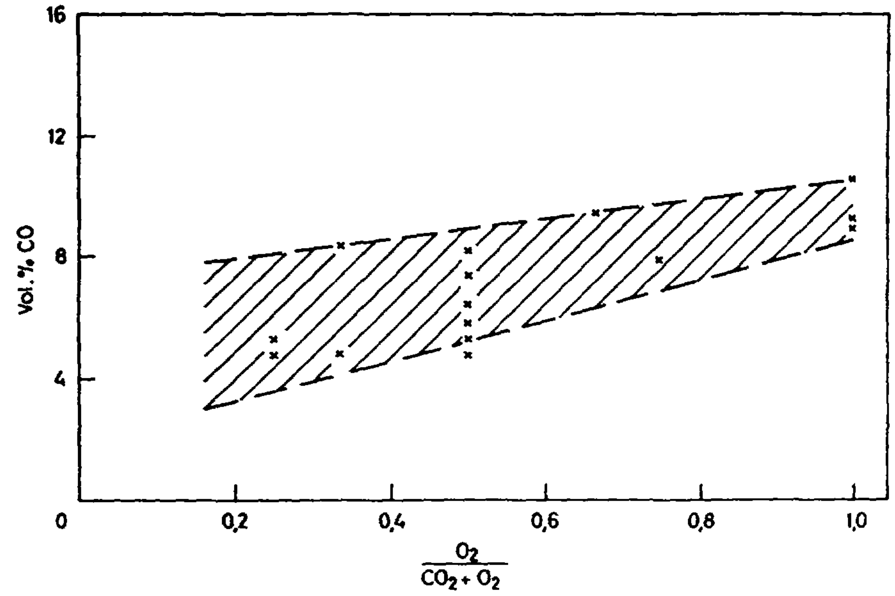

Figure 2: Off-gas composition as function of burning-gas composition

Salt-Melt-Dissolution

The knowledge of the most effective reaction temperature was of decisive importance for a rational carrying out of the pyrosulphate salt-melt dissolution. The temperature determines not only the kinetics of the reactions

$$UO_2 + 2K_2S_2O_7 \longrightarrow UO_2SO_4 + 2K_2SO_4 + SO_2 \qquad 1)$$

$$ThO_2 + 2K_2S_2O_7 \longrightarrow Th(SO_4)_2 + 2K_2SO_4 \qquad 2)$$

$$FP(oxide) + nK_2S_2O_7 \longrightarrow FP(sulphate)_n + nK_2SO_4 \qquad 3)$$

but also the degree of thermal decomposition of the potassium pyrosulphate

$$K_2S_2O_7 \longrightarrow K_2SO_4 + SO_3 \qquad 4)$$

and thereby the minimum quantity of melt necessary per weight unit mixed thorium-uranium oxide. Thorough investigations showed that the most favourable temperature range lies between 700 and 750°C. Under these conditions the pyrolysis of $K_2S_2O_7$ is kept within tolerable limits and the reactions 1) to 3) proceed fast enough to guarantee a complete dissolution of 100 grams of fuel particles in the 4,5-fold quantity of melting material within 4 hours.

Protactinium-Recovery

The method of the sorptive protactinium pre-isolation originates from investigations of American scientists some years ago. They succeeded in removing 97 % of the protactinium present in nitrate solutions by sorption on powdered unfired vycor (5). Our own experiments have shown that this procedure can also be applied in the sulphate system since the process solution retained only 3 - 4 % of unadsorbable protactinium (6). It should be pointed out that these data were obtained with tracer amounts of protactinium, however, we are quite optimistic regarding a separation of macro-quantities, since GOODE and MOORE have already confirmed their tracer results with mmol quantities of protactinium (7).

Thorium-Isolation and Feed-Adjustment

With respect to the technical aspects of the process, the pyrosulphate salt-melt dissolution exhibits a certain disadvantage in that very dilute solutions are obtained. The reason for this is the poor solubility of thorium sulphate, which under the conditions in question permits only thorium concentrations of about 5 g/l. Naturally, the content of fissile material is comparably low too, and amounts to approx. 1 g/l with fuel particles having a thorium : uranium ratio of 5 : 1. Since the reprocessing of such dilute solutions may hardly be done in an economical way, we decided to introduce a concentrating step in order to end up with solutions of 20 g/l after the feed adjustment. The uranium losses observed in connection with the quantitative thorium precipitation are rather small; the sulphatothorate isolated in experiments carried out so far contained always less than 0,1 % of the total uranium.

FIRST URANIUM EXTRACTION CYCLE

The chemical flowsheet developed for the first extraction cycle is shown in figure 3.

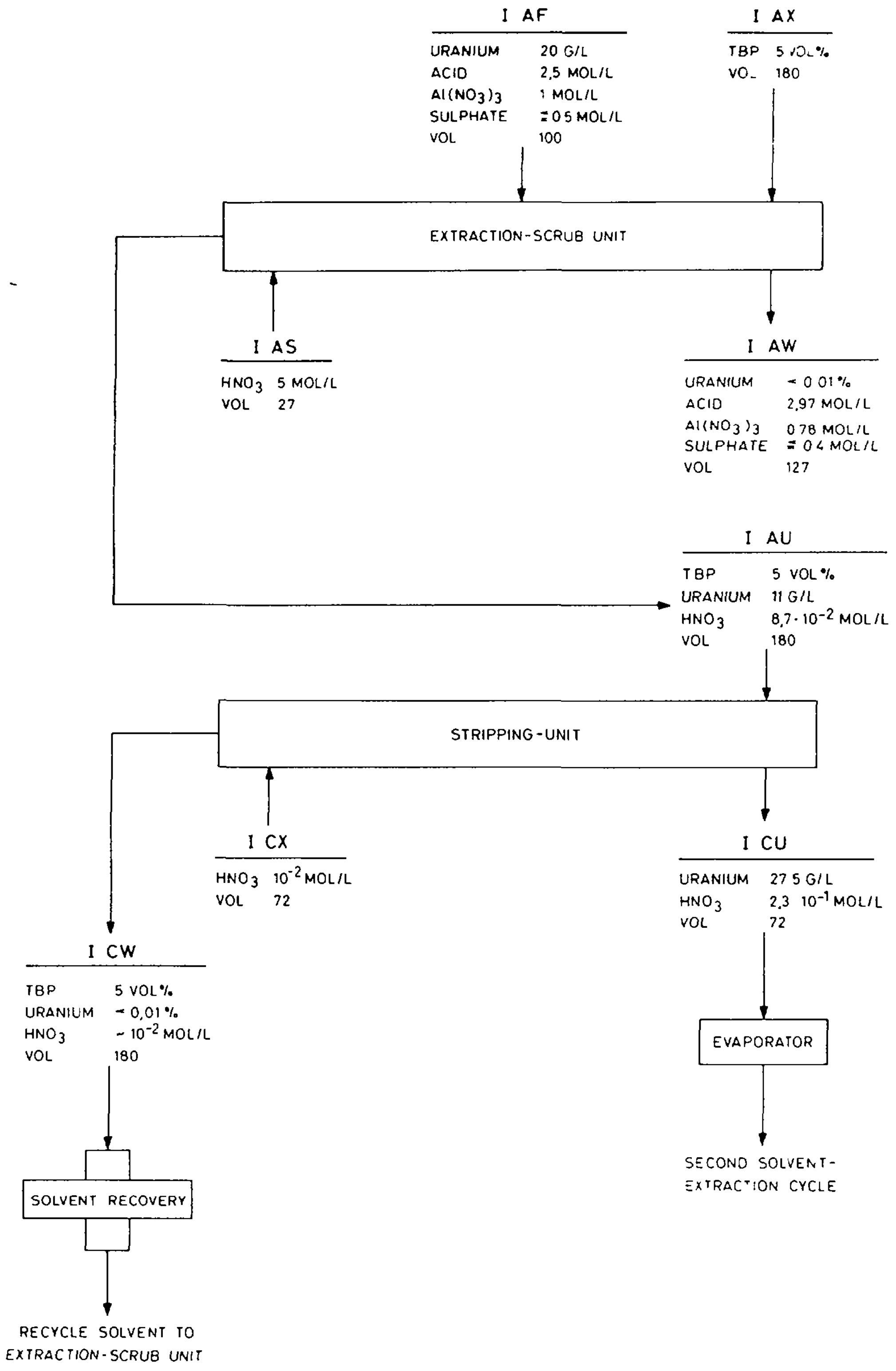

Figure 3: KFA-TBP 23/25-Process; Chemical Flowsheet for First Uranium Solvent-Extraction Cycle

The following operation conditions were chosen: feed solution with an uranium content of 20 g/l, 1 mol aluminum-nitrate, 2,5 mol/l of free acid and a sulphate concentration of ≤ 0,5 mol/l. The exact sulphate concentration depends on the uranium to thorium ratio of the dissolved (Th,U)O_2-particles, it never exceeds however 0,5 mol/

The aluminum nitrate concentration employed is a compromise between economical aspects (minimum of solid waste, low costs of chemicals) and practical requirements (low stage values and an uranium concentration in the organic phase as high as possible in the feed input stage).

The acid concentration of 2,5 mol/l, which together with the acid from the scrub section results in a total acid concentration of 3 mol/l in the extraction section was chosen to ensure a good ruthenium decontamination (8). This fission product requires special attention in the first extraction cycle. A partial predecontaminati of some other unpleasant fission products like zirconium, niobium and cerium has already taken place during the concentrating step.

The number of theoretical stages necessary for a better than 99,99 recovery of uranium may be deduced from figure 4.

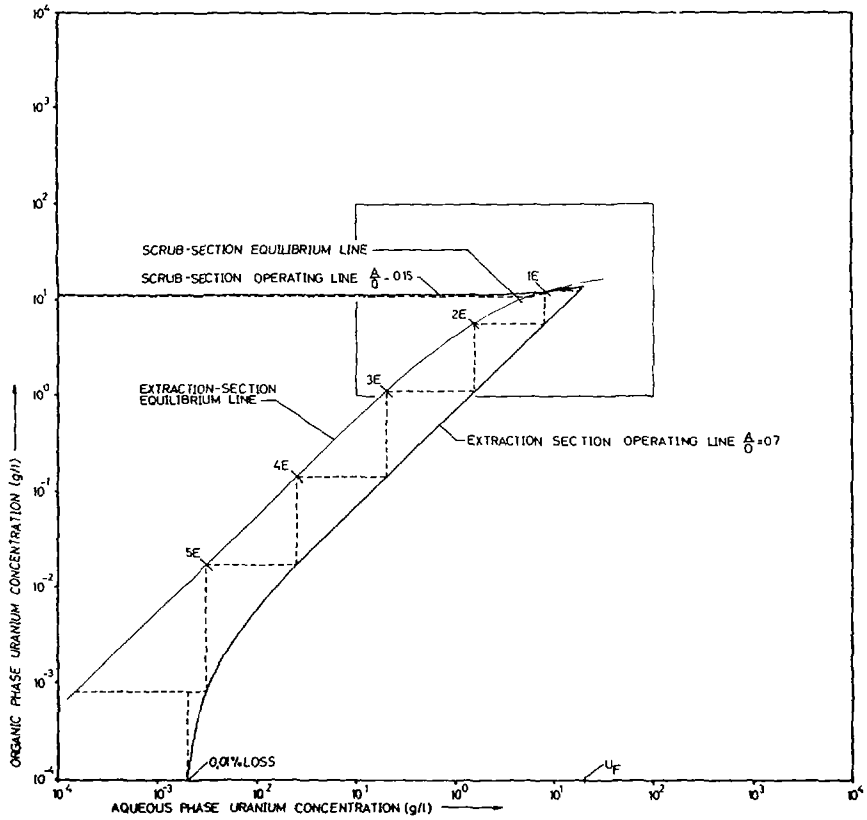

Figure 4: KFA-TBP 23/25-Process; Theoretical McCabe-Thiele Diagram for Extraction-Scrub-Unit

concentration of 0,5 mol/l amounts to 6. In practice about 8 stages are needed because of a 75 % efficiency of the individual stages. When the sulphate concentration is lower than 0,5 mol/l, the number of stages decreases, because the uranium distribution coefficients are increasing.

For scrubbing of extracted fission product activities, 5 molar nitric acid is used. Again the high acid concentration serves for a good ruthenium decontamination but it causes also a diminution of the zirconium-niobium and cerium content of the organic phase. As can be seen from figures 4 and 5 the operating line of the scrubbing section intersects the inherent uranium equilibrium line, i. e. a pinchpoint operation is employed in this part of the extraction-scrub unit.

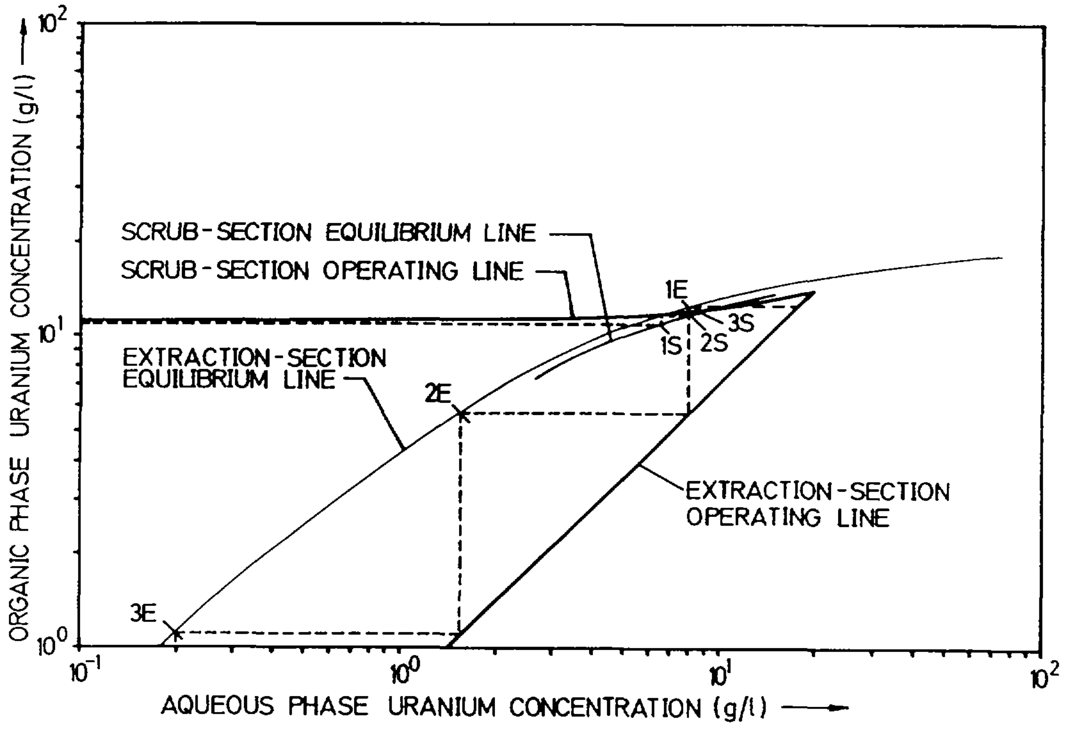

Figure 5: KFA-TBP 23/25-Process; Theoretical McCabe-Thiele Diagram for Extraction-Scrub-Unit

Stripping of uranium is achieved using 0,01 molar nitric acid. Applying the flow conditions shown in figure 3, three theoretical stages, respectively four practical stages, are necessary to strip more than 99,99 % of the uranium out of the organic phase.

Chlorex-Process

Process-Philosophy

This flowsheet represents an alternative to the KFA-TBP 23/25-Process.

1. Next to the burning, the dry chlorination of the graphite-based fuel elements of HTG-reactors may be another advantageous method for processing this type of fuel elements.
2. Because all the carbon remains in the elementary state by this method, the off-gas treatment and especially the rare gas retainment, if necessary, is considerable simplified. It may be done using the well-known technique of coldtrapping.
3. The real separation of the breed and feed material as well as the purification of the valuable fissile uranium is achieved applying a solvent extraction procedure using either tri-n-butylphosphate in a nitrate system, or long-chain tertiary amines directly in th chloride solutions. The rate of dissolving the chlorides in aqueous media is spontaneously, compared to the long dissolution times of the oxides in nitric acid.
4. No serious problems are encountered in case of processing silicon carbide containing fuel particles, since easily volatile $SiCl_4$ is formed and thus can be separated from the heavy metals.
5. The graphite residues of the chlorination may be stored either directly as medium level waste or be burned by a simple procedure and then stored.
6. If a fractional thorium-uranium condensation is aspired, which is theoretically possible, but still causes many technical difficulties, the uranium content of the condensated thorium chloride should be lower than 80 ppm corresponding to 0,2 % uranium loss.

One of the major problems of the whole chlorination step is the corr sion at elevated temperatures with chlorine in the presence of carbon and carbon monoxide chlorides.

The principles of the propose flowsheed are shown in figure 6

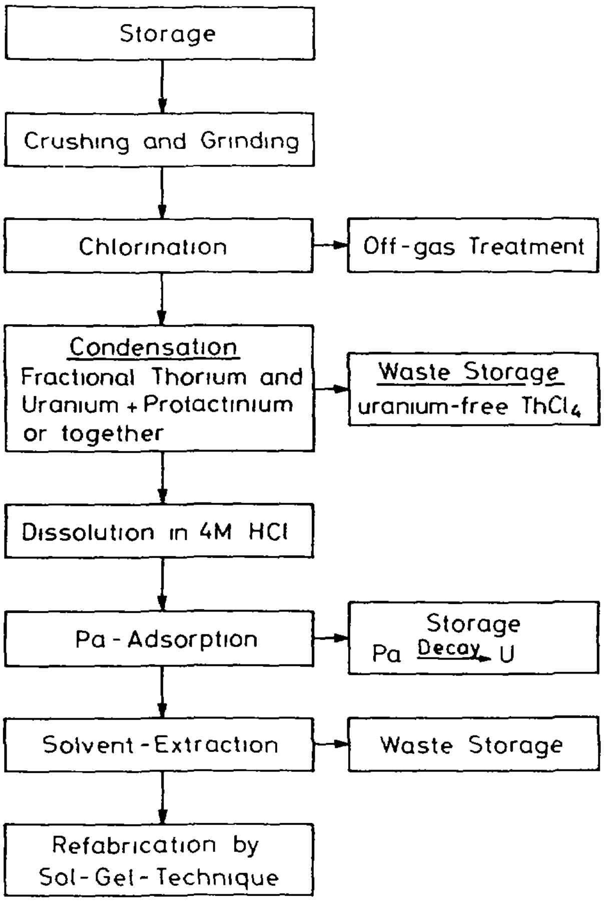

Figure 6: Chlorex-Process; Schematic Process-Flowsheet

After an adequate cooling period, the graphite-based fuel elements are crushed and then ground in a gastight combined milling device to a particle size between 50 and 300 µm with only a small fraction of fines below 50 µm. Thus all coated particles (with a diameter from 500 to 800 µm) are broken up. The radioactive off-gas is cold-trapped out of a stream of inert gas.

The material is then fed into a bed which is fluidized with chlorine at 900 to 1000°C. The carbon, which is present in large quantities, reduces the oxides. At temperatures around 1000°C reactions like the following occur at a high rate.

$$ThO_2 + 2\ C + 2\ Cl_2 \longrightarrow ThCl_4 + 2\ CO.$$

The heavy metals are removed out of the fluidized bed without any residue. The remaining graphite may be discarded and stored problem should arise in burning this graphite, because all the volatil fission products are already released during the chlorination step. The chlorides are condensated either partly fractionated in two separate condensers or together in one unit. At 500 to 600°C the bulk of thorium chloride condenses together with the chlorides of barium, strontium, the rare earth elements, partly also with the chlorides of cesium, ruthenium and some other elements. Uranium and protactinium chloride are deposited at room temperature together with the more volatile fission product chlorides like niobium, zirconium and molybdenum chloride. The uranium-protactinium fraction (or the combined chloride condensate) is dissolved in 4 M hydrochloric acid. This solution is passed through a silica gel or Vycor glass column to adsorb and remove the protactinium.

The protactinium-free solution is further separated and decontaminated by a solvent extraction cycle. One alternative investigated is the conversion of the chlorides into nitrates and then applying the well-known THOREX-flowsheet, another possible method is a solvent extraction procedure in the chloride system with a solution of long-chain aliphatic amines in aromatic hydrocarbons. The purified uranyl chloride or nitrate solution is used for the production of particles with the sol-gel technique.

Experimental Results

Crushing and Grinding

The graphite fuel spheres (60 mm diameter) containing coated particle were crushed in a hammer mill. In a typical experiment 42,4 % of this product passed a 0,3 mm sieve. The oversize particles were ground in a vibrating mill. The sieve analysis of the ground material is shown in table 3.

Table 3: Sieve Analysis of the ground Graphite Fuel Elements

Grain size mm	Portion %
0,315 - 0,160	19,1
0,160 - 0,100	20,8
0,100 - 0,050	30,0
0,05	30,1

hammer mill and the time of grinding must be variable to guarantee a constant starting material with the above size distribution. The ground material can be processed in a fluidized bed without any difficulties as was shown in model experiments.

Fluidization

The ground product resulting in the foregoing step shows relatively good fluidization. The minimum fluidization velocity at 1000°C is 0.3 to 0.5 $Ncm^3/cm^2 \cdot sec$ chlorine. According to the very different densities of the components - the density of graphite amounts to nearly 2, this of heavy metal oxide nearly 10 g/cm^3 - we observed a sedimentation of the heavy component. Most of the oxide was found in the lowest quarter of the fluidized bed. Though a contact between oxide and graphite is essential for the reaction, this sedimentation may be tolerated as shown by chlorination experiments, because parts of the pyrocarbon coating remained on the coarse fragments of the particles and the oxide fines do not settle.

Chlorination

The chlorination of the heavy metal oxides in the presence of graphite, for instance

$$ThO_{2(s)} + 2\ C_{(graphite)} + 2\ Cl_2 \longrightarrow ThCl_{4(g)} + 2\ CO$$

$$H_{1000^\circ C} = \sim\ + 24\ \text{kcal}$$

is an endotherme reaction. The reaction proceeds very quickly. In the fluidized bed with a cross section of 2 cm^2, 20 g of heavy metal oxides in the presence of graphite were volatilized within 1 hour without any residue. After 15 minutes more than 99 percent of the thorium and uranium were volatilized.

To obtain more exact reaction rates, we chlorinated a mixture of 2 parts of unground particles with a mean diameter of 400 µm and 1 part of graphite of a sieve fraction from 400 to 800 µm in a fixed bed. The feed rate of chlorine was 6 $l/h \cdot cm^2$.

The reaction rate was independent from the gas flow within the limit of error.

pyrocarbon and oxide particles.

Figure 7 shows the results of these experiments. In the evaluation of the data it was presumed that the surface of the particles remain constant. This is approximately correct only at low temperatures and short reaction times. At 825°C, however, more than 80 percent, at 900°C more than 97 percent, are already chlorinated in 15 minutes in the presence of graphite. The true chlorination rate in g/h•cm^2 particle surface should therefore be higher, especially at high temperatures.

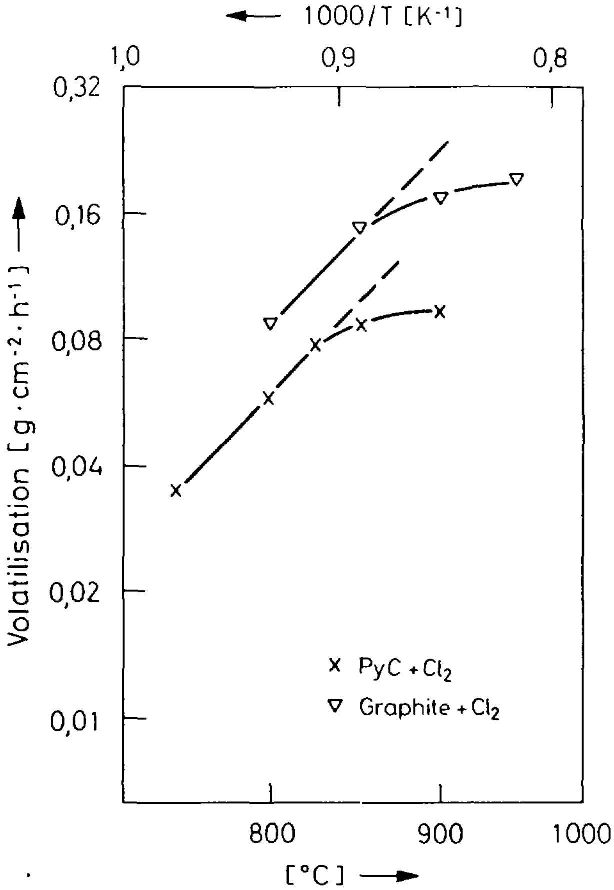

Figure 7: Chlorination Rate of Oxide Particles

The rate of chlorination in the presence of pyrocarbon amounts to approximately 50 to 65 percent of that one in the presence of graphite.

From the linear branches of the curves an activation energy of ~25 kcal/mol was calculated.

The lowest possible temperature of the reactor is determined by the behaviour of the fission products. At 800°C, for instance, the vapour pressure of some fission product chlorides (Cs, Ba, Sr, RE) is very low. Though the main part of thorium und uranium oxide is volatilized after a short time, some uranium is retained as chloride by the fission products. Quantitative volatilization of the uranium was only possible, if also all of the fission product chlorides were vapourized.

Condensation of the Chlorides

The condensation of the chlorides may be done in two ways. The simplest method is to deposite thorium chloride together with uranium- and protactinium chloride as well as the most volatilized fission products. No remarkable decontamination can be achieved in this case. A serious problem is the avoidance of crust formation in the condensation-step, particularly thorium chloride crusts are difficult to remove. In an unsatisfactory way it may be done mechanically, but somewhat better by dissolving with water or acid. We succeeded however in depositing the chlorides as a fine powder, which method we are pursueing at present.

A second possibility is to deposite thorium chloride and uranium chloride separately. The protactinium follows in this case the uranium. An advantage of this procedure would be the early removal of the bulk of thorium, which may be directly stored after conversion into a storable form without any further decontamination. It is essential in this case however that the uranium content of the thorium fraction is extremly low. Theoretical calculations have shown that the uranium losses are tolerable only, if the partial pressure of the uranium chloride is extremly low. The achievement of this condition may cause enormous problems in a technical plant.

To avoid this difficulty, we decided to develop and to use column condensers filled with an inert material at operation temperatures of about 600°C. At this temperature the vapour pressure of the thorium chloride is high enough to achieve a "repeated sublimation effect" by flushing with chlorine after the main reaction is over. The measured uranium loss in the bulk of finally condensated thorium is less than 0,5 %.

Most of the low volatile fission product chlorides are deposited together with thorium chloride, whereas the higher volatile chlorides are found in the uranium-protactinium fraction. The decontamination factors obtained in a small laboratory unit are given in table 4. For the experiments, a synthetic mixture of (Th,U)-oxide spiked with approximately 3 % of fission product oxides was used. The thorium chloride was deposited at about 400 °C.

Table 4: Decontamination of Condensated Chlorides

Fission Product	Decontamination Factors	
	Th-Fraction	U-Fraction
Zr	100	2
Nb	100	2,5
Mo	100	100
Ru	2	10
Sn	50	100
Sb	2000	17
Te	100	3
Cs	1,2	50
Ba	3	200
La	3	250
Ce	2	2000

Silicon tetrachloride resulting from the chlorination of silicon carbide coatings passed the condensator and was found in the off-gas.

Corrosion Tests

The corrosion of the chlorinator and the thorium condensator is a serious problem. Metallic materials cannot be used for parts which are in contact with chlorine or the gaseous chlorides above 450 °C. Therefore we have tested graphite and several ceramics.

Graphite shows good resistance against chlorine and chlorides also at high temperatures. The reaction of the structure graphite with the oxides is very unlikely in the presence of the great excess of the ground graphite from the fuel elements. It also may easily be machined. Connections are possible by threads or by a cement on the basis of carbon. To get a gastight material, the graphite must be coated with pyrocarbon. The mechanical erosion in a fluidized bed is very low. The abrasion amounts to 0.30 to 0.35 and 0.15 $mg \cdot cm^{-2} \cdot month^{-1}$ for normal and pyrocarbon coated graphite, respectively. Although a small pyrocarbon-coated apparatus (200 g of heavy metal capacity) behaved satisfactory so far, it seems doubtful, if bigger units can be built. The problem is the achievement of a low permeability. In technological chlorination plants the reactor is usually lined with ceramic materials. Therefore we have tested some ordinary and fine ceramics, respectively, at 1000°C with a mixture of chlorine and carbon monoxide in the absence and in the presence of gaseous thorium and uranium chlorides. The results are given in table 5.

The fine ceramics were common laboratory grade materials. Didier Maxial HH is a stone with relatively coarse grains. Didier SN is a fine grain quality, especially suitable for chlorination plants. In Steuler TU-S stones the iron and alkali content is very low. The grain size is comparable with this of Maxial HH. The results show that the vapour of thorium and uranium chloride is much more corrosive than chlorine in the presence of carbon monoxide. In the most ordinary ceramics the grain boundaries are destroyed in presence of chlorides. The lowest weight loss is found for porcelain and quartz. However, quartz is ruled out according to the divitrification at high temperatures and the relatively low radiation stability.

At 400°C several alloys are stable against chlorine. Hastelloy C, for instance shows a weight gain of approximately 0.6 $mg \cdot cm^{-2} \cdot h^{-1}$.

Table 5: Corrosion of Ceramics at 1000 °C

Ceramics	Weight loss $mg \cdot cm^{-2} \cdot h^{-1}$ without chlorides	with chlorides	Remarks
Fire Clay	0.08	6.3	mechanical stable
Sillimanite	0.12	13.0	"
Alumina	0.75	14.8	"
Porcelain	0.06	0.07	"
Quartz	0.03	0.03	"
Maxial HH	0.90	39.4	not stable
Didier SN	2.4	17.4	stable
Steuler TU-S	-	7.2	stable only in absence of chlorides

References

1. Krämer, H., Schulten, R. and Wagemann, K., Die langfristige wirtschaftliche Bedeutung des gasgekühlten Hochtemperaturreaktors, Nukleonik, Vol. 11, 1968, pp. 44 - 53

2. Flanary, J.R., Goode, J.H., Kibbey, A.H. Roberts, J.T. and Wymer, R.G., Chemical Development of the 25-TBP-Process, ORNL-1993

3. Witte, H.O., Survey of Head-End Processes for the Recovery of Uranium and Thorium from Graphite-Base Reactor Fuels, ORNL-TM-1411

4. Flanary, J.R., Goode, J.H., Vaughen, V.C.A., Witte, H.O., Hot-Cell Evaluation of the Burn-Leach Process Using Irradiated Graphite-Base HTGR-Fuels, ORNL-4120

5. Moore, J.G. and Rainey, R.H., Separation of Protactinium from Thorium in Nitric Acid Solutions by Solvent Extraction with Tributylphosphat or by Adsorption on pulverized unfired Vycor-Glass or Silica Gel, TID-7675

6. Kaiser, G. and Coenegracht, O., Aufarbeitung thoriumhaltiger Kernbrennstoffe, zusammenfassender Bericht für den 1. Projektabschnitt 1966 - 1968, pp. 50 - 54

7. Goode, J.H. and Moore, J.G., Adsorption of Protactinium : Final Hot-Cell Experiments, ORNL-3950

8. Bruce, F.R., The Behaviour of Fission Products in Solvent Extraction Processes, Progress in Nuclear Energy, Series III, Process Chemistry, Vol. I, Pergamon Press, London 1956, pp. 130 - 146

STATUS OF REPROCESSING OF HIGHLY RADIOACTIVE FUELS IN THE USA

by

J. A. Buckham

ABSTRACT

Much of the current fuel reprocessing development work in the USA is directed toward reprocessing fuels that are highly radioactive--because of both higher irradiation levels and shorter cooling times. Aqueous reprocessing technology, presently the major technique employed in the USA, now appears to be the most suitable also for the highly radioactive fuels. The problems created in this technology by higher radioactivity levels, and some possible solutions to these problems are discussed; limited processing experiences with such fuels are described. Backup technology can be developed in the form of pyrometallurgical and volatility processing, and these processes may be more suitable in some cases for highly radioactive fuels. The status of technology for these two processes is summarized.

(Work performed under the auspices of the Atomic Energy Commission under contract AT(10-1)-1230)

Table I. Comparison of Typical LMFBR and LWR Fuels(2)

	LMFBR	LWR
Composition		
Core	UO_2-20% PuO_2	UO_2-1% PuO_2
Blanket	UO_2- 2% PuO_2	
Cladding	Stainless Steel	Zircaloy
Average Burnup (MWd/ton)		
Core	100,000	30,000
Blanket	14,000	
Core Specific Power (MW/ton)	200	20

The inherent differences in LMFBR fuels which will require additional development work and engineering resolution for the application of any processing technology are:

1. Higher Burnup--With an expected irradiation level of some 2-3 times the maximum expected for LWR fuels, LMFBR fuels will present additional heat dissipation problems during all handling, processing, and waste disposal operations. Also, radiation damage to organic materials such as solvents will be greater.

2. Higher Plutonium Content--Because of its higher concentration, it may be more difficult to maintain plutonium in its proper valence state at all times, and some hydrolysis and precipitation problems may have to be overcome. Criticality problems will also be greater, especially in the plutonium cleanup steps. Greater use of fixed and soluble poisons may be required.

3. Sodium Bonding Agents--The possible presence of sodium bonding agents between the fuel and cladding would present additional cleaning and dissolution problems, but it appears that these problems can be surmounted by careful application of conventional operating practices.

A host of additional fuel reprocessing problems are created by any decision for prompt processing of the fuel. Economic analyses indicate an incentive for more prompt processing of future fuels to reduce inventory charges. To what extent and how soon the overall logistics and economics will make prompt processing desirable remains to be determined, but some development effort on the special problems created is in order. These special problems include:

1. Additional heat dissipation problems
2. Additional solvent damage problems
3. Control of short-lived I-131 releases
4. Control of short-lived Xe-133 releases.

The possible magnitude of these problems can be estimated from Table II which lists the inventory of certain fission products in a typical 30-day cooled LMFBR core fuel and in a typical 150-day cooled LWR fuel.

Table II. Fission Products in Typical LMFBR and LWR Fuels(2)

	Curies/ton	
	LMFBR Core (30d)	LWR (150d)
Iodine-131	8×10^5	2
Xenon-133	1×10^6	<0.1
Krypton-85	1×10^4	5×10^3
Total F.P. Curies	4.5×10^7	2.4×10^6

An inherent difference between LMFBR and LWR fuels also exists in the handling of the plutonium product from the respective plants. The LMFBR fuels will contain high concentrations of various plutonium isotopes other than Pu-239 (including Pu-236, -238, -240, -241, and -242) and the daughter products. The fact that the activity due to these daughter products will build back rapidly following plutonium decontamination means that rapid means of fuel refabrication will be needed if refabrication is to be performed by direct handling and not within shielded facilities. If this is not possible, and remote fabrication must be used, the necessity for a fuel reprocessing technique giving high initial decontamination may not be important.

AQUEOUS FUEL PROCESSING TECHNOLOGY

Aqueous solvent extraction processes have been used very successfully since 1951 in the United States for recovery of plutonium from AEC production reactors and for recovery of enriched uranium from test reactor and propulsion reactor fuels. Initial commercial fuel reprocessing plants in the USA are also generally adopting variations of aqueous reprocessing.

The first commercial fuel processing plant in the United States, built by Nuclear Fuel Services, Inc., at West Valley, New York, has a nominal capacity of one metric ton per day of LWR fuels and has been operational since 1966. This plant employs a shear-leach, solvent extraction system. The second commercial plant, now under construction at Morris, Illinois, by the General Electric Company, is also a one-ton/day plant and will employ shear-leach and solvent extraction for the initial processing steps, followed by further aqueous processing of plutonium and fluoride volatility processing of uranium. Commercial operation of this plant is scheduled for 1970.

The Allied Chemical Corporation has filed an application for a construction permit with the AEC for a five metric-ton-per-day aqueous reprocessing plant to be located at Barnwell, South Carolina. This plant is now being designed, with commercial operation anticipated for 1973. The Atlantic Richfield Co. has also announced plans for a five-ton-per-day aqueous reprocessing plant to be built near Leeds, South Carolina, with commercial operation tentatively planned for 1974. Several other companies are known to be seriously considering construction of commercial fuel reprocessing plants in the USA, and most of their considerations appear to be centered around aqueous reprocessing technology.

The commercial aqueous reprocessing plants in the USA are being designed primarily for recovery of plutonium and uranium from LWR fuels. While these plants may be able to handle effectively LMFBR fuels also, there will undoubtedly have to be certain process modifications for highly efficient operation with these fuels. Newer plants will probably be built more specifically for processing highly radioactive fuels such as short-cooled LMFBR fuels. The problems involved in adapting existing plants or designing new aqueous plants for such tasks are discussed in the following subsections along with the status of development of pertinent technology.

Aqueous Head-End Processing

Two processes appear to merit serious consideration for head-end preparation of highly irradiated fuels for aqueous solvent extraction processing. These are, integral electrolytic dissolution of the fuel and mechanical shearing followed by acid leaching. With the widespread adoption of shear-leach processing by commercial plants in the USA, this process must be regarded as the leading contender, and it will undoubtedly receive the most intensive development efforts in the next several years. The electrolytic dissolution process requires much less costly mechanical handling facilities, but has an inherent disadvantage in that the stainless steel cladding ends up in the high-level aqueous waste solution, thus diluting the fission products and causing less compact waste storage.

Electrolytic Dissolution: An electrolytic dissolver in which the fuel is dissolved in a vertical position has been installed at the Savannah River Plant (SRP)(3), and a horizontally oriented electrolytic dissolver is being installed at the Idaho Chemical Processing Plant (ICPP)(4) for dissolution of a variety of stainless steel containing fuels, most of which contain high-enriched uranium. The major load for the SRP dissolver will be a number of stainless cermet fuels from several different reactors, while the major initial load for the ICPP dissolver will be the stainless-clad uranium metal fuel from the sodium-cooled EBR-II fast breeder reactor. In pilot plant tests, the sodium bonding in the EBR-II fuel has presented no difficulty, since the sodium is exposed gradually to the acid and dissolves in a mild manner. EBR-II fuel assemblies are currently being received at ICPP where they are stored in poisoned storage racks under water. Two-year exposures of irradiated pins in the basin have shown that while the cladding may be sensitized during irradiation, it is not significantly corroded in the storage basin water. Prior to dissolution, unfueled end pieces will be removed from the fuel assemblies; the bundles of elements will then be charged to the ICPP electrolytic dissolver for simultaneous electrolytic dissolution of the cladding and chemical dissoluton of the uranium in nitric acid. Boric acid will be used as a soluble poison in the dissolvent. After clarification of the dissolver effluent, the uranium will be recovered by solvent extraction with ten percent TBP using pulse columns.

While all components of both electrolytic dissolvers will satisfactorily resist corrosion of nitric acid in the presence of the electric field, some corrosion problems would be encountered with fluoride ions present. Thus, if fluoride ion were required for complete dissolution of plutonium oxides, the latter would have to be removed from the electrolytic dissolver as a slurry and dissolved downstream in a vessel capable of resisting fluoride corrosion. On the other hand, the electrical potential may aid in the dissolution of certain passive materials in some highly irradiated fuels in an electrolytic dissolver.

Shear-Leach Processing: Adapting current commercial shear-leach processes for handling highly radioactive nuclear fuels can vary from minor modifications to development of major new techniques, depending on the degree of irradiation and length of cooling expected. A conceptual design study has been prepared by Watson, et al, of Oak Ridge National Laboratory(5) for shear-leach processing of PuO_2-UO_2 LMFBR fuel irradiated to 100,000 MWd/ton and cooled for only 30 days. A summary flowsheet for this process covering many of the factors considered in this study

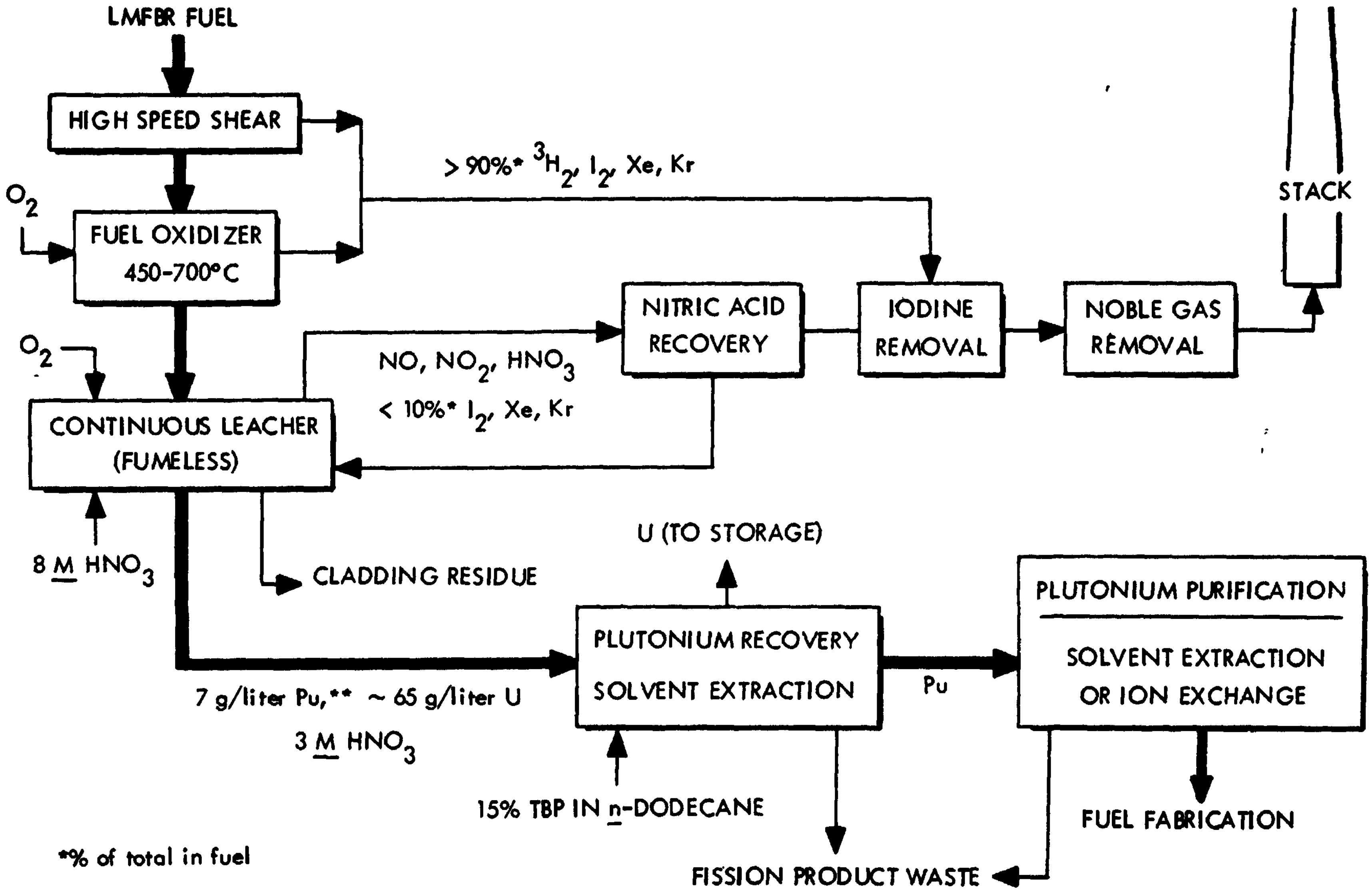

*% of total in fuel

**5 g/liter fissionable Pu

Figure 1. Conceptual Diagram for aqueous processing of short-cooled LMFBR fuels(6)

is shown in Figure 1(6). This study is summarized in the ensuing paragraphs as it probably represents an extreme example of large-scale processing of highly irradiated fuel.

Due to the extremely short cooling time, it appears that fuels of this type would have to be shipped in liquid metal for adequate cooling. Thus, the reprocessing plant would have to deactivate and remove the sodium upon receipt of the fuel. An alpha-gamma-containing facility concept, as shown in Figure 2(5) has been evolved which includes "bagging in" the fuel elements from the cask to an argon-atmosphere cell. In this concept, the fuel assemblies are cleaned in the vertical position, using successively, moisture-laden argon gas, steam, and water. The complexity and high probable cost of such a receiving facility emphasize the need for further study of this problem.

Due to heat dissipation limitations by natural convection, it appears that not over 100 fuel tubes could be stored or sheared together. Thus, fuel elements containing a greater number of fuel tubes would have to be disassembled and recombined into groups of not over 100 tubes for shearing. The release during shearing of perhaps up to 50 percent of the inventory of iodine, tritium, xenon, and krypton represents the largest problem during the shearing operation. The collection and retention of these gases, separate from any entrained fuel particles, and isolation of the shearing operation from the upstream receiving facilities and from the downstream operations would be required.

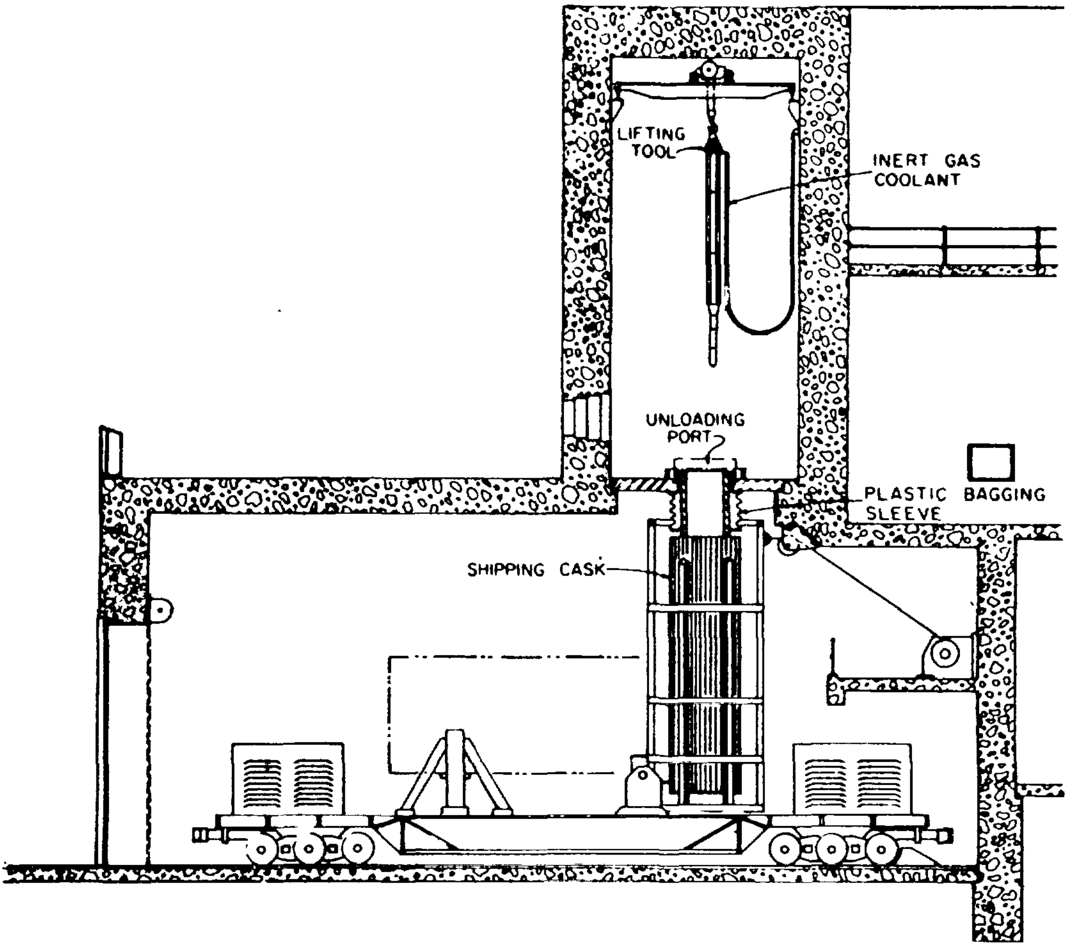

Figure 2. Receiving and handling of LMFBR fuel.

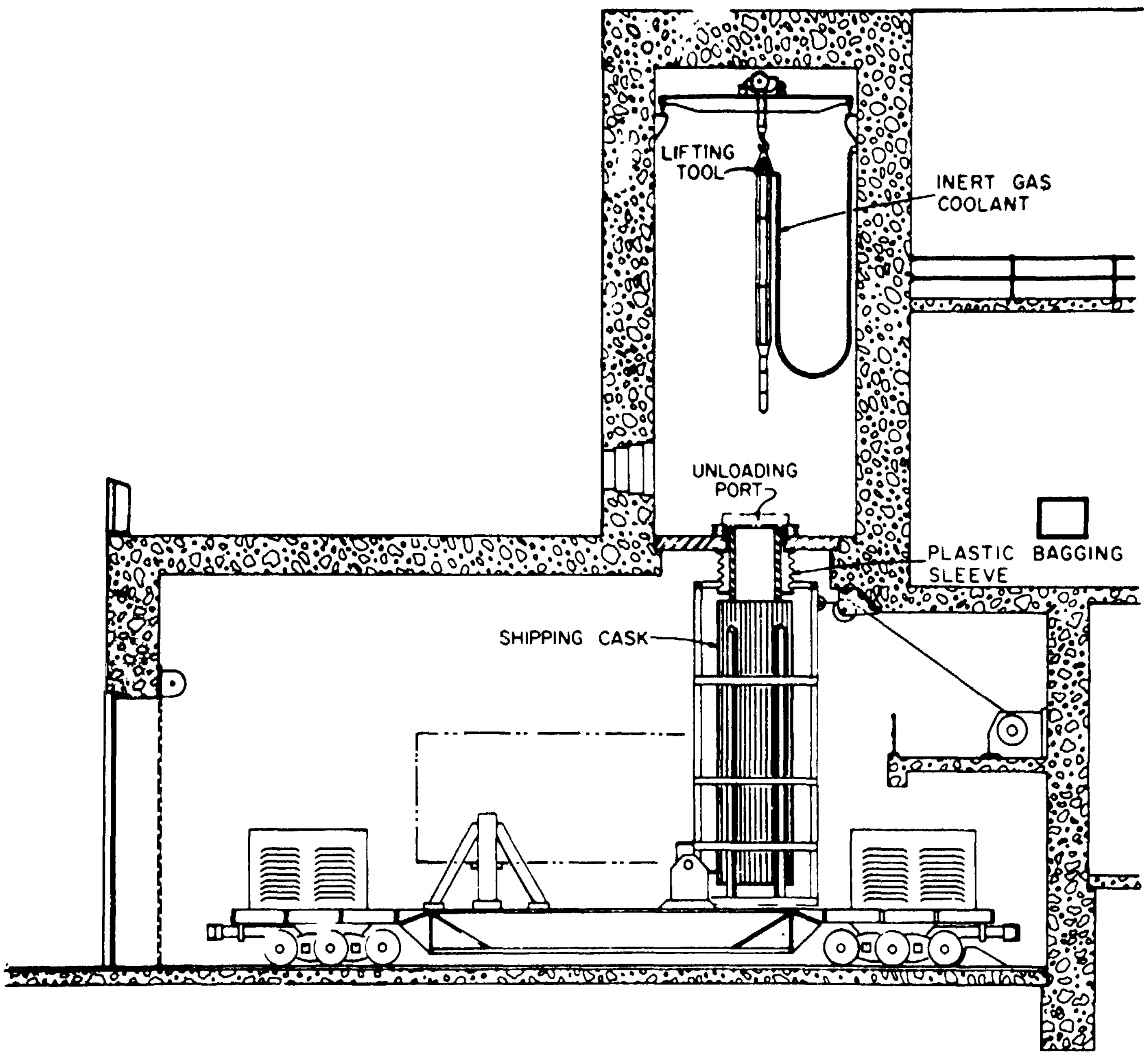

Receiving and handling of LMFBR fuel.

Another problem created by the short-cooling is the necessity for head-end iodine removal to prevent spread of radioactive iodine throughout the subsequent aqueous processing steps, thus causing difficulty in processing and waste disposal. A high-temperature (>450°C) oxidation step has been proposed by Watson, et al, between the shear and the leacher. This step would also release much of the noble gases and tritium, thus complicating the iodine recovery. Total iodine decontamination factors of up to 10^6 may be required. It is possible that the pulverization of the heavy metal oxide associated with the oxidation may permit physical separation of the stainless steel hulls at this point.

In the final leaching step, conventional leaching equipment and processes would appear to be satisfactory, provided that the mixed oxides are in such a condition following irradiation as to be completely soluble in simple acid solutions. An overall schematic diagram of such a head-end reprocessing facility is given in Figure 3(5).

Aqueous Dissolution

The effects of irradiation on the dissolution characteristics of various fuels and cladding materials present a complex picture. In another paper(7) at this panel, Rohde and Buckham have summarized the experience in the USA on this effect for several materials of continuing importance. Table III gives the effect of irradiation on dissolution rate for several metallic fuels and cladding alloys. For the aluminum alloys there is a general tendency toward passivation in nitric acid-mercuric nitrate solution with exposure to radiation. Where the passivation is moderate, it can sometimes be overcome by increasing the concentration of mercuric nitrate catalyst or decreasing the concentration of nitric acid. If the alloy becomes extremely passive, dissolution in caustic or in nitric acid in an electrolytic dissolver is still possible. Interestingly, in tests on Zircaloy-clad, zirconium-uranium alloy,

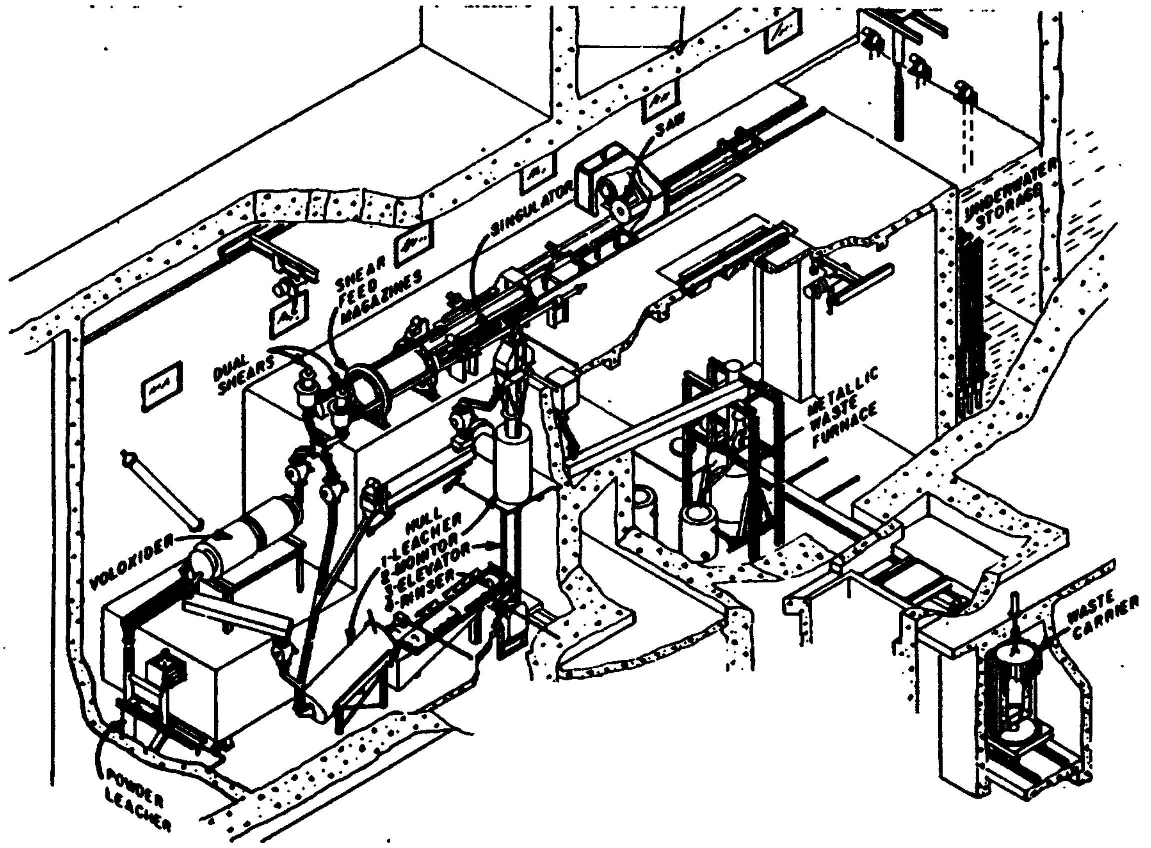

Figure 3. Conceptual mechanical head-end processing facility

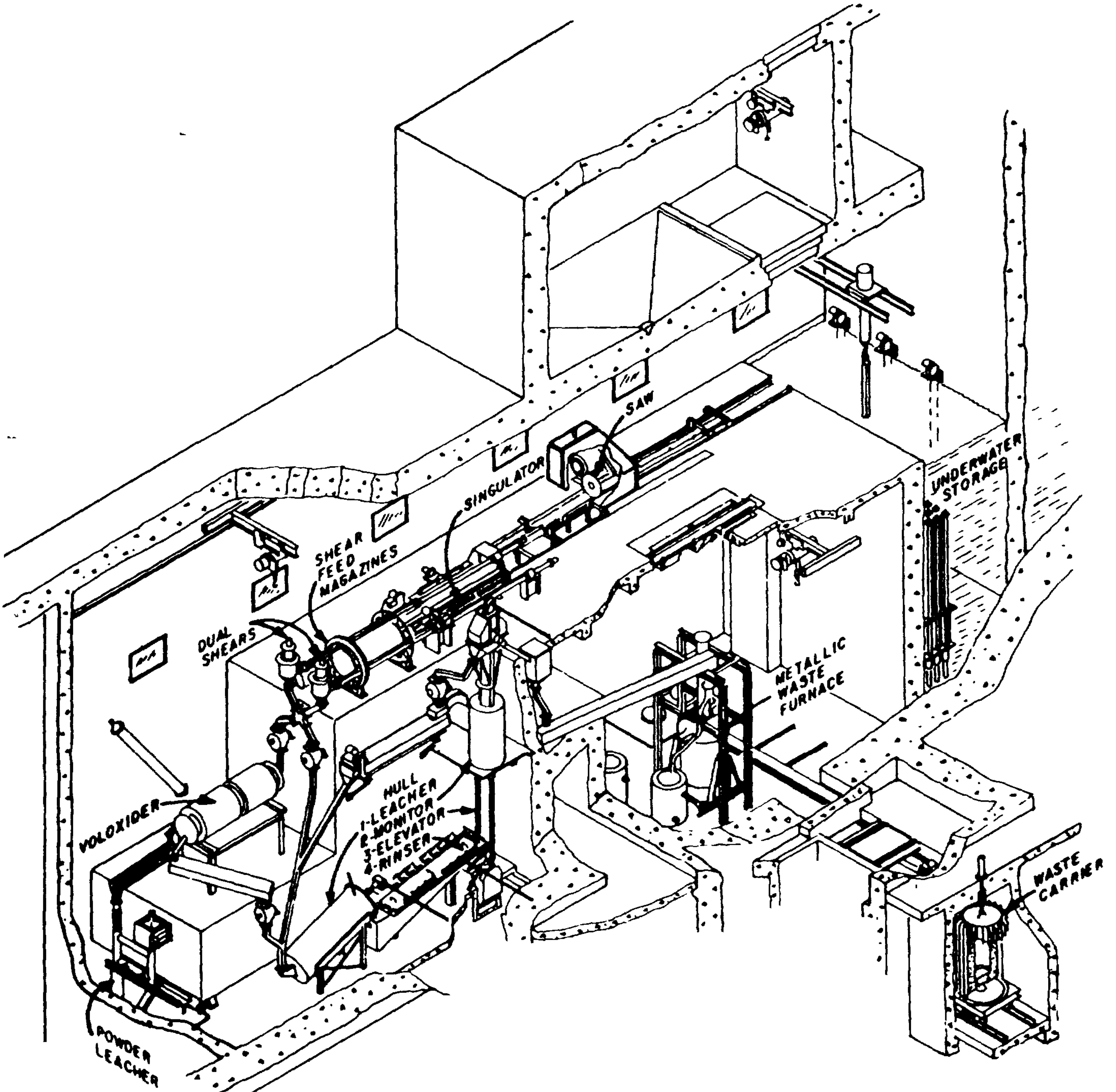

Conceptual mechanical head-end processing facility.

Table III. Summary of the Effects of Irradiation on the Dissolution Rate of Metallic Fuel and Cladding Materials

Alloy	Dissolution Process	Irradiation Level	Effect of Irradiation on Dissolution Rate
Aluminum-3% Uranium	HNO_3-$Hg(NO_3)_2$	45% BU of U-235	Passive
Aluminum-7% Plutonium	HNO_3-$Hg(NO_3)_2$-HF	60 & 99% BU of Pu-239	Decrease in Rate as BU increased
Zirconium-4% Uranium	HF	0-50% BU of U-235	200% Increase
Zircaloy-2 cladding on preceding alloy	HF	Irradiation as above	70% decrease
Stainless Steel Type 304	H_2SO_4	5×10^{22} n/cm^2 (fast)	No change in reactivity

Table IV. Summary of the Effects of Irradiation on the Dissolution Rate of Oxide Fuel Materials

Fuel	Dissolution Process	Irradiation Level MWd/T	Effect of Irradiation on Dissolution Rate
UO_2-20% PuO_2 (solid solution)	HNO_3	0-99,000	None
UO_2- 0.5% PuO_2 (mixture)	HNO_3-NH_4F	0-5,000	Rate increased as solid solution formed in reactor
ThO_2-4% UO_2	HNO_3-HF-$Al(NO_3)_3$	0-98,000	Rate increased

the dissolution rate for the cladding decreased while the rate for the fuel alloy increased following irradiation. Galvanostatic measurements on Type 304 stainless steel in sulfuric acid showed no change in reactivity with fast neutron irradiation.

Table IV gives results for oxide fuels. The uranium oxide-20 percent plutonium oxide, which may be an important fuel in the fast breeder, showed no change in dissolution rate up to very high irradiation levels. But, in the uranium oxide-0.5 percent plutonium oxide, where solid solution was not achieved during fabrication, there was an increase in dissolution rate with irradiation, presumably as the mixture became a more perfect solid solution in-reactor. Thorium oxide-uranium oxide became more reactive at increasing irradiation levels.

For those materials which are of greatest interest to the fast breeder program, stainless steel cladding and uranium oxide-plutonium oxide irradiation does not apparently present a problem in the dissolution step; however, because this property has an important effect on reprocessing costs, it should be reinvestigated as fuel types and reactor irradiation conditions become better established.

Short cooling time for fuels out of the reactors would present another general problem for the dissolution step--that of retention of the I-131 within the plant. The most pertinent plant-scale experience along this line is that of the ICPP during the RaLa process operations. This experience is covered by Bower and Buckham in another paper at this panel(8). Briefly, two-day cooled high-burnup MTR elements were dissolved and processed for the prompt recovery of the radioactive barium and for the subsequent recovery of the uranium. About 25,000 curies of I-131 were associated with each fuel element processed, and the handling techniques developed allowed the escape of less than one curie of this iodine to the environment. While this decontamination factor for iodine is very good, plant performance would have to be over 30 times better if 30-day cooled, highly irradiated LMFBR fuels were to be satisfactorily reprocessed in a large central reprocessing plant.

Solvent Extraction

The primary problem introduced into the solvent extraction operation by processing of highly radioactive fuels is radiation damage to the solvent. This topic has been extensively reviewed in a recent report by Blake(9) of ORNL, with special attention to the extrapolation of data, calculation of radiation exposures, behavior of iodine from short-cooled fuels, and irradiation of the solvent by plutonium. His findings and conclusions are summarized in the ensuing paragraphs.

In extrapolating laboratory data to actual plant operating conditions, Blake concluded that in many cases erroneous results had been obtained; exaggerated total doses to the solvent were often used in laboratory studies (in order to obtain definitive effects), and these had not always been adequately scaled down prior to extrapolation. In addition, the extrapolation calculation is not readily done, and uncertainties therein were probably most frequently estimated on the pessimistic side. Emphasis was placed on the stabilizing effect of the use of a high purity diluent--eg, n-dodecane--as compared to the hydrocarbon mixtures which were used as diluents in many laboratory tests. Some of the problems formerly attributed to the tributyl phosphate were shown to be actually due to the diluent. Generally, during reprocessing of fast breeder reactor fuels, modest decreases in the first cycle decontamination might be experienced due to the high irradiation levels of the solvent, but no serious deleterious effects should be anticipated even with pulse columns. If shorter contact times in the solvent extraction contactor can be shown to be necessary, the use of alternate contactors such as stacked clones(10) or centrifugal contactors(11) can be adopted. The problem of solvent stability and its impact upon the solvent extraction process requires continued study as processes for fast reactor fuels are developed and the actual conditions existing in the process are more closely defined.

One of the greatest sources of uncertainty in the calculation of the radiation exposure received by the solvent in a contactor is the estimation of the organic phase content of the contactor. Where possible, distinction should be made between contact time when the solvent is intimately mixed with the aqueous phase (mixing) and when the solvent is essentially separated from the aqueous phase (settling), since absorption of beta energy is much more significant in the former case. With a proper estimation of contact time, Blake describes a method for estimating the radiation dose to the solvent.

For short-cooled fuels, iodine can accumulate in the solvent. Blake concluded that sufficient data were not available in the literature to allow a quantitative prediction of the distribution of iodine between the dissolver, the off-gas, and the solvent extraction system. Before reprocessing is undertaken for cooling times where the iodine-131 is important, it will be necessary to determine the distribution of iodine within the system, provide for its control in the effluents, and evaluate its chemical and radiation effect on the solvent.

In the reprocessing of LMFBR fuels, the shorter lived isotopes of plutonium will be more prominent than they have been in the reprocessing of LWR or production reactor fuels. Additional solvent damage in the second and third cycles of solvent extraction is therefore inevitable. However, solvent damage in all cycles from this source will be far less than that from fission products in the first cycle.

In general, it appears that the use of existing solvent extraction technology will be satisfactory for reprocessing of highly radioactive fuels such as those from LMFBR's, but that additional attention to solvent selection, contactor design features, and solvent cleanup will be required.

PYROCHEMICAL PROCESSING TECHNOLOGY

The melt refining process, which has been used routinely for several years to reprocess enriched uranium alloy EBR-II fuel, is a major achievement in the pyrometallurgical reprocessing field. This process was directed specifically at metallic fuels and on-site refabrication of fuel alloy pins. More recent developments have extended this pyrometallurgical technology into more broadly applicable pyrochemical technology. Fuel materials processed by pyrochemical methods are not limited to metallic or alloy structures, but can include ceramic or oxide fuels; present development is directed at a salt transport process as a backup for aqueous processes for LMFBR fuels.

The EBR-II Melt Refining Process

The melt refining process used for the past several years for reprocessing EBR-II fuel provided rapid recycle of the fuel with up to 99 percent removal of many of the fission products. Because of the modest decontamination, refabrication of fuel elements from the recovered fuel was also conducted behind heavy shielding walls. Melt refining consists of melting and liquating chopped fuel pins (after mechanically removing the stainless steel cladding) in a lime-stabilized zirconia crucible for one to three hours at 1300-1400°C under a high purity argon atmosphere(12). The liquid alloy is then poured into a mold to form an ingot. During the liquation period, a major part of the fission products are removed through volatilization and selective oxidation by the crucible. Figure 4 illustrates the principal features of the melt refining process.

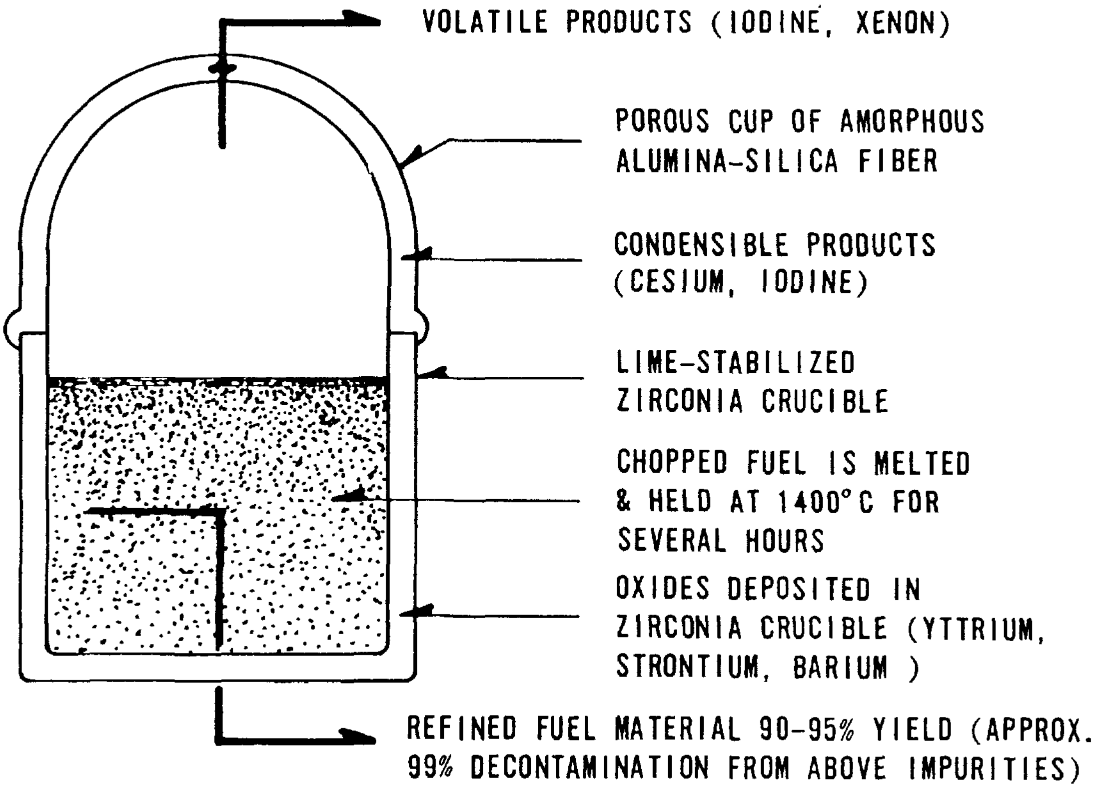

Figure 4. EBR-II Melt Refining

EBR II MELT REFINING

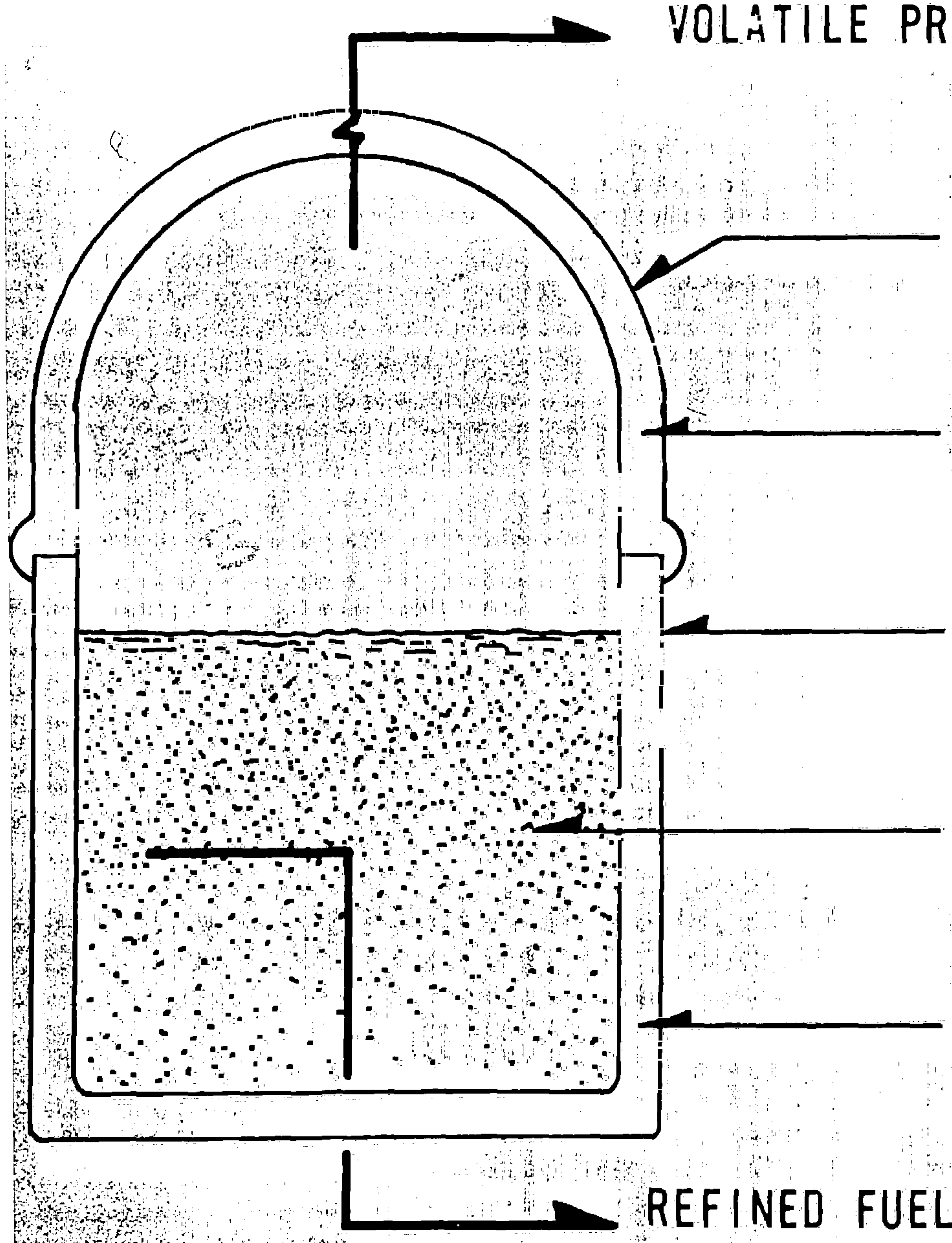

VOLATILE PRODUCTS (IODINE, XENON)

POROUS CUP OF AMORPHOUS ALUMINA-SILICA FIBER

CONDENSIBLE PRODUCTS (CESIUM, IODINE)

LIME-STABILIZED ZIRCONIA CRUCIBLE

CHOPPED FUEL IS MELTED & HELD AT 1400°C FOR SEVERAL HOURS

OXIDES DEPOSITED IN ZIRCONIA CRUCIBLE (YTTRIUM, STRONTIUM, BARIUM)

REFINED FUEL MATERIAL 90-95% YIELD (APPROX. 99% DECONTAMINATION FROM ABOVE IMPURITIES)

Although melt refining has been successfully demonstrated, it is not a complete process in the sense that auxiliary means are required to recover the unpoured metal and oxide that remain in the crucible as a skull after the pouring step(12). Approximately seven percent of the uranium in the original melt refining charge appears in the skull. An auxiliary "Skull Reclamation Process" was developed to recover this material, but the process equipment was not installed at EBR-II because of other priorities. Nonetheless, the development effort on the skull reclamation process contributed substantially to the technology of the salt transport process.

The Salt Transport Process for LMFBR Fuels

The Salt Transport Process(12), currently under development at Argonne National Laboratory, is aimed at stainless steel-clad, uranium-plutonium oxide LMFBR fuels. The process is expected to accommodate both core and blanket material and to provide a plutonium recovery of at least 99 percent; auxiliary recovery of up to 99 percent of the uranium could also be achieved if economically justified. With a modest amount of multiple staging, fission product decontamination factors of 10^6 or greater should be possible with this process.

Figure 5 is a schematic flowsheet showing the principal steps in the salt transport process(6). Stainless steel cladding is removed by dissolution in liquid zinc at about 800-850°C; uranium and plutonium oxides are not soluble in the melt. Fission products released to the off-gas are collected in the argon cover gas and confined for decay and further processing.

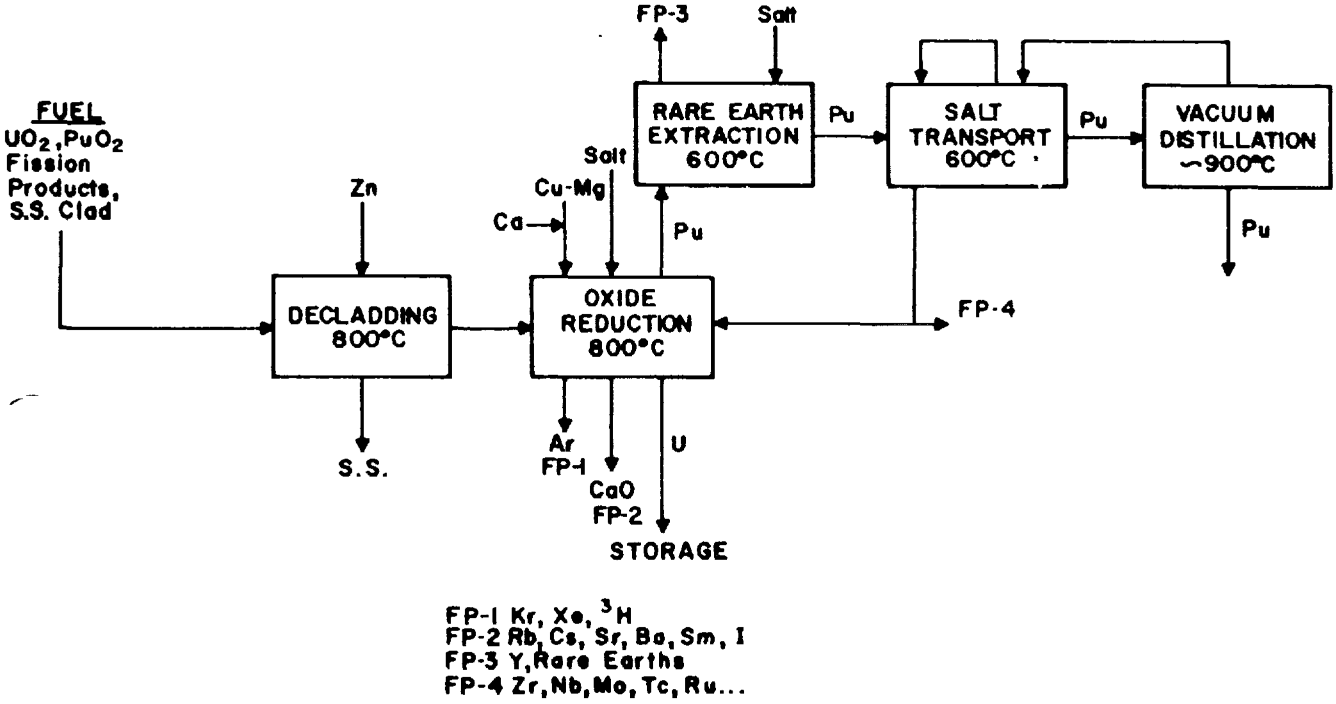

Figure 5. Salt Transport Process for LMFBR Fuel

SALT TRANSPORT PROCESS FOR LMFBR FUEL

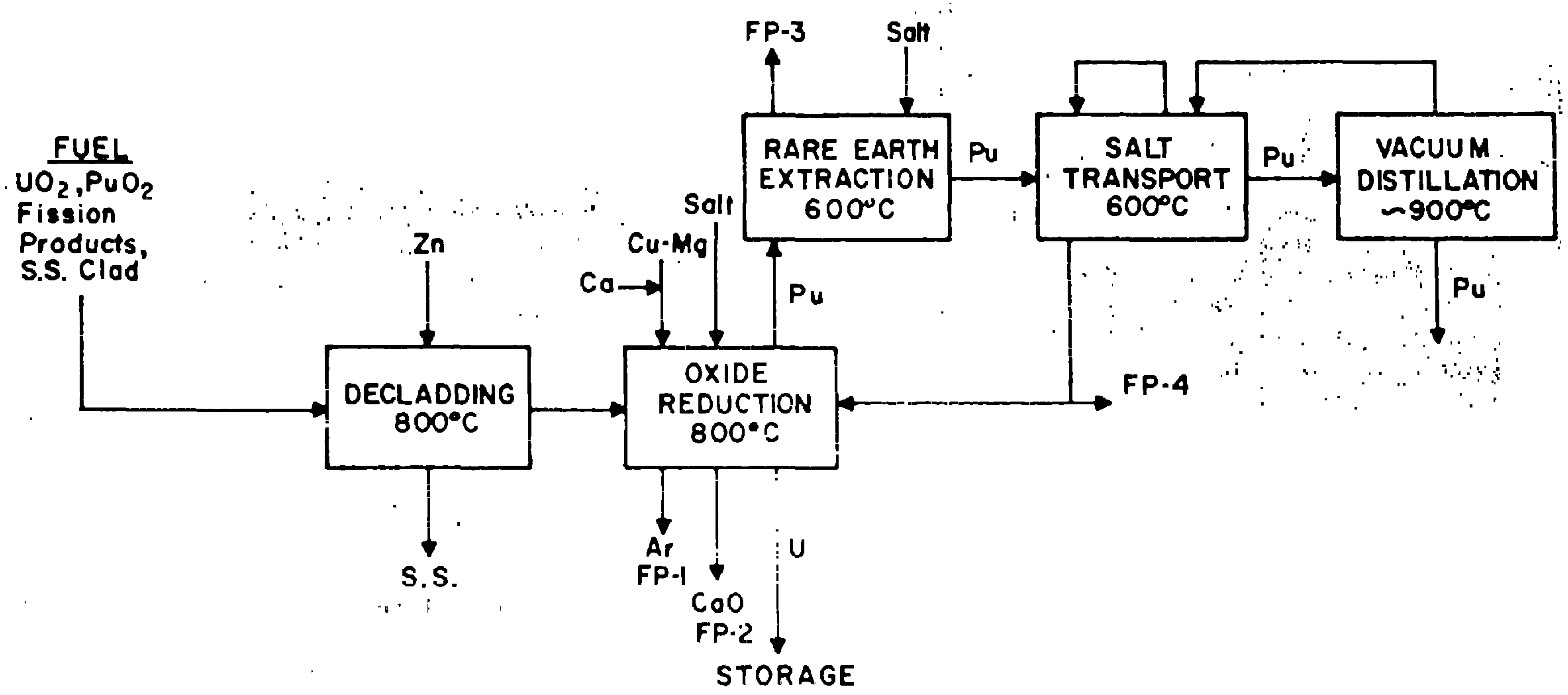

FP-1 Kr, Xe, ^{3}H
FP-2 Rb, Cs, Sr, Ba, Sm, I
FP-3 Y, Rare Earths
FP-4 Zr, Nb, Mo, Tc, Ru...

The uranium and plutonium oxides remaining in the vessel are reduced to the metals by reaction at 800°C with a liquid Mg-Cu-Ca alloy in a bath of fused $CaCl_2$-CaF_2 salt. The alkali and alkaline earth fission products transfer to the salt waste, the plutonium is present in a liquid metal phase, and the uranium precipitates as metal.

Plutonium and the rare earth fission products are transferred in the Cu-Mg-Pu alloy supernate to a semicontinuous mixer-settler battery. In four stages of contact, the rare earths are extracted into a salt phase consisting of $MgCl_2$ (47 mol percent), NaCl (30 mol percent), KCl (20 mol percent), and MgF_2 (3 mol percent); each contact stage gives a decontamination factor of approximately 100. In the salt phase, the $MgCl_2$ provides the required distribution coefficient for separation, the NaCl and KCl lower the melting point to the desired temperature (600-650°C), and the MgF_2 promotes disengagement of the liquid metal and salt. Salt moves progressively from the fourth to the first stage; as each batch of fuel is processed, fresh salt is added to the fourth stage and spent salt is removed from the first stage.

The plutonium is recovered from the Cu-Mg-Pu alloy in three additional mixer-settler stages: a molten salt of the composition used in the preceding stage is used as a carrier to transport the plutonium through the stages. The plutonium is transferred from the Cu-Mg-Pu alloy to a Zn-Mg acceptor alloy; en route, in the sixth stage, the salt is contacted with a captive Cd-Mg alloy to scrub traces of noble fission products. The Zn-Mg-Pu alloy from the last stage is retorted at approximately 900°C to volatilize the zinc and magnesium, and the plutonium is recovered as an ingot.

The chemical feasibility of all of the major separations has been established in laboratory-scale experiments, and engineering investigations have been in progress for some time on the general pyrochemical operations. Engineering effort is currently devoted to the construction of a glove box facility in which all steps of the salt transport process can be performed sequentially on a kilogram scale. Preliminary studies of a conceptual design for a one-ton/day plant for LMFBR core and blanket fuel(6,12) indicate that two decladding-reduction vessels would be required, each approximately 200 cm tall and 45 cm in diameter, and each capable of handling three subassemblies at a time. These vessels could probably be constructed of tungsten or lined with tungsten. The mixer-settler bank would be approximately 180 cm long and 50 cm by 60 cm in cross section. Materials of construction might include molybdenum-tungsten alloy or niobium with the last stage lined with tantalum. The vacuum distillation equipment would probably be of slab geometry for criticality control and could consist of three units, each about 50 cm by 75 cm and 3.75 cm thick. Tungsten is again a possible material of construction.

FLUORIDE VOLATILITY PROCESSING TECHNOLOGY

Fluoride volatility processing in multi-step fluidized bed operations represents another backup process for highly irradiated fuel reprocessing. This process is a natural outgrowth of the volatility process used in uranium ore refining, as practiced, for example, by the Allied Chemical Corporation at Metropolis, Illinois(13). The feasibility of this process has been established for some time for high-enriched uranium fuel processing, and its application to plutonium recovery from low-enriched LWR fuels has been proposed and flowsheets have been developed(2). Preliminary studies indicate that fluoride volatility processing can be extended to LMFBR fuels, although some of the required steps are not yet developed.

Processing of LWR Fuels: A conceptual process for fluidized bed volatility processing of LWR fuels has been effectively summarized by Jonke(2). This process consists of a four-step operation involving, sequentially, (1) decladding in HCl gas at 350°C, (2) air oxidation at 450°C to convert the fuel to powdered oxides, (3) fluorination of uranium at 300°C with BrF_5, and (4) plutonium recovery by fluorination with F_2 at 300-550°C. A conceptual flowsheet for this process is shown in Figure 6(2).

Full length fuel bundles would be loaded into the primary reaction vessel without mechanical treatment other than removal of massive end fittings. Here, in a bed of fluidized alumina, the cladding would be removed by reaction with gaseous HCl at about 350°C. The zircaloy cladding and alloying constituents would be volatilized as chlorides and removed from the unit for subsequent treatment as waste, while the uranium and plutonium would remain in the bed as solid fuel compacts. The fuel solids would then be converted to finely divided oxides by oxidation in the fluidized bed at 450°C. Partial fluorination of the fuel oxides would then be accomplished by addition of BrF_5 gas to the fluidized bed at 300°C; volatile UF_6 would be removed from the vessel while non-volatile PuF_4 would remain behind, together with most of the non-volatile fission products. Finally, complete fluorination of the plutonium is accomplished by use of gaseous fluorine to form the volatile PuF_6 which is removed and condensed. Final purification and decontamination of uranium and plutonium can be accomplished by adsorption-desorption techniques, or by fractional distillation. The latter is preferred because it is more compact.

LMFBR Processing: Volatility processing of LMFBR fuels would have to cope with the same problems as aqueous processing--high heat generation rates, high plutonium concentrations, sodium bonding, and possibly large iodine inventories if the fuel is short-cooled. Specific solutions to these problems have not been evolved, but none of the problems appears insurmountable.

Figure 7(2) illustrates a concept for processing of LMFBR fuels by a continuous fluorination and volatility process, based on the assumption that a head-end process will mechanically separate fuel particles from disassembled and sheared fuel elements. For illustrative purposes, four vessels are arranged in a cascade so that solids overflow from one to another. Vessels would be of a small enough size to avoid problems of nuclear criticality. The first two vessels fluorinate the uranium to UF_6 using 25 percent F_2 and a temperature of 350°C; under these conditions, very little PuF_6 is formed. The solids containing the bulk of the plutonium pass to the next two vessels where PuF_6 is formed by treatment with 90 percent F_2 at a temperature of 500°C. In a final plant concept, the fluorination system could consist of two dual-stage fluorinators rather than the four vessels illustrated. Product purification would be by similar techniques to those proposed for LWR fuels. All of these steps a conceived as being possible, based on LWR fuel process development, but many, such as the head-end treatment, are not developed at all, and others are only partially developed. Much more development work will be required before an actual process installation could be considered.

CONCLUSIONS

Future processing of highly radioactive fuels presents challenges, but extension of existing technology appears capable of meeting these challenges. Aqueous reprocessing technology is the leading contender in the USA today, and it will receive the most intensive development over the next several years. The most significant of the unresolved problems are those associated with short cooling of fuels such as heat dissipation, iodine control, and xenon control. Existing data indicate that higher irradiation levels can be effectively handled by existing dissolution and solvent extraction practices. Studies on pyrochemical and fluoride volatility technology will also be continued, on a lesser scale, as these may prove to be more suitable for certain situations. Detailed plans for development studies in these areas are currently being formulated.

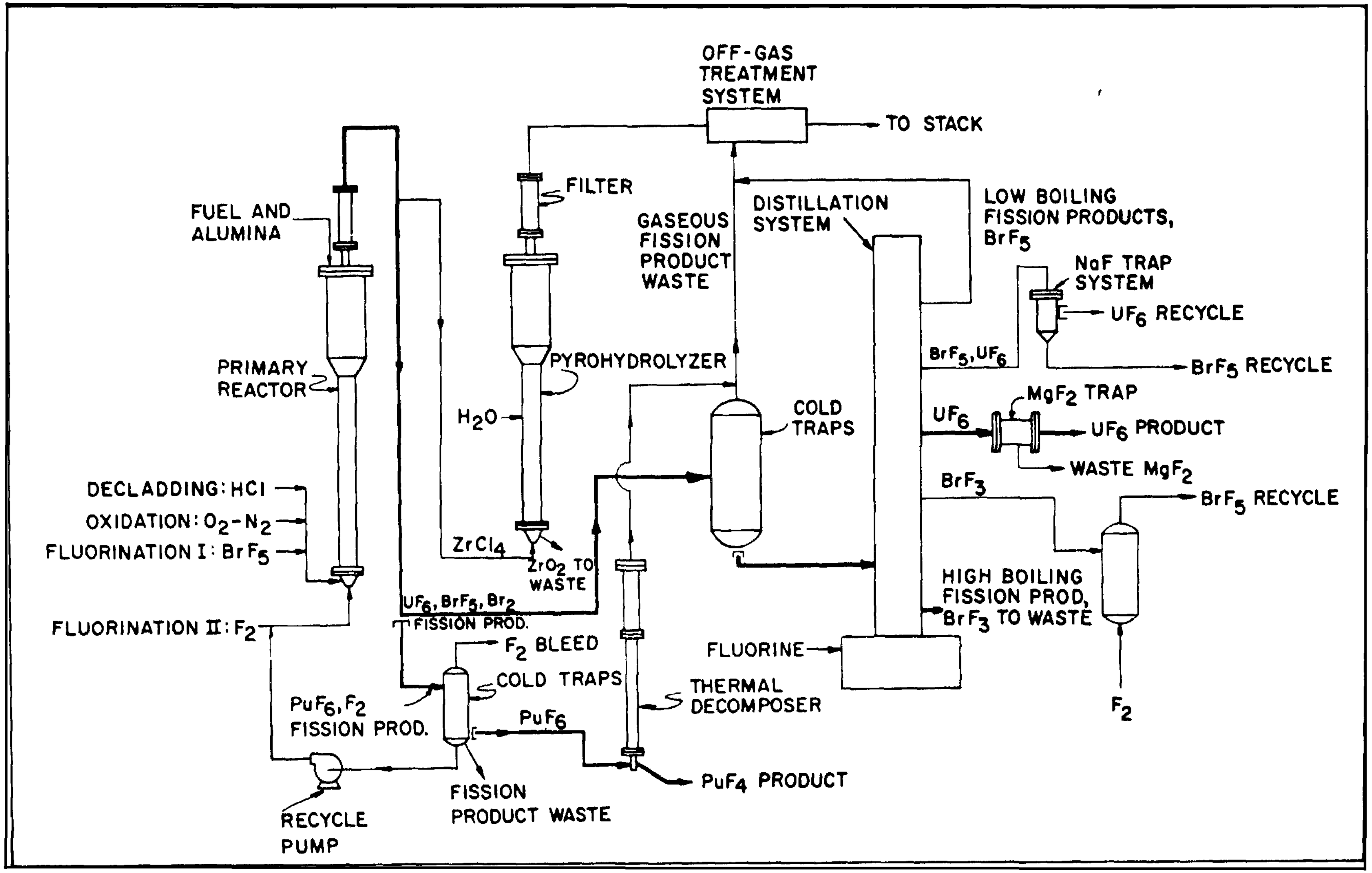

Figure 6. Flowsheet for volatility processing of thermal power reactor fuels.

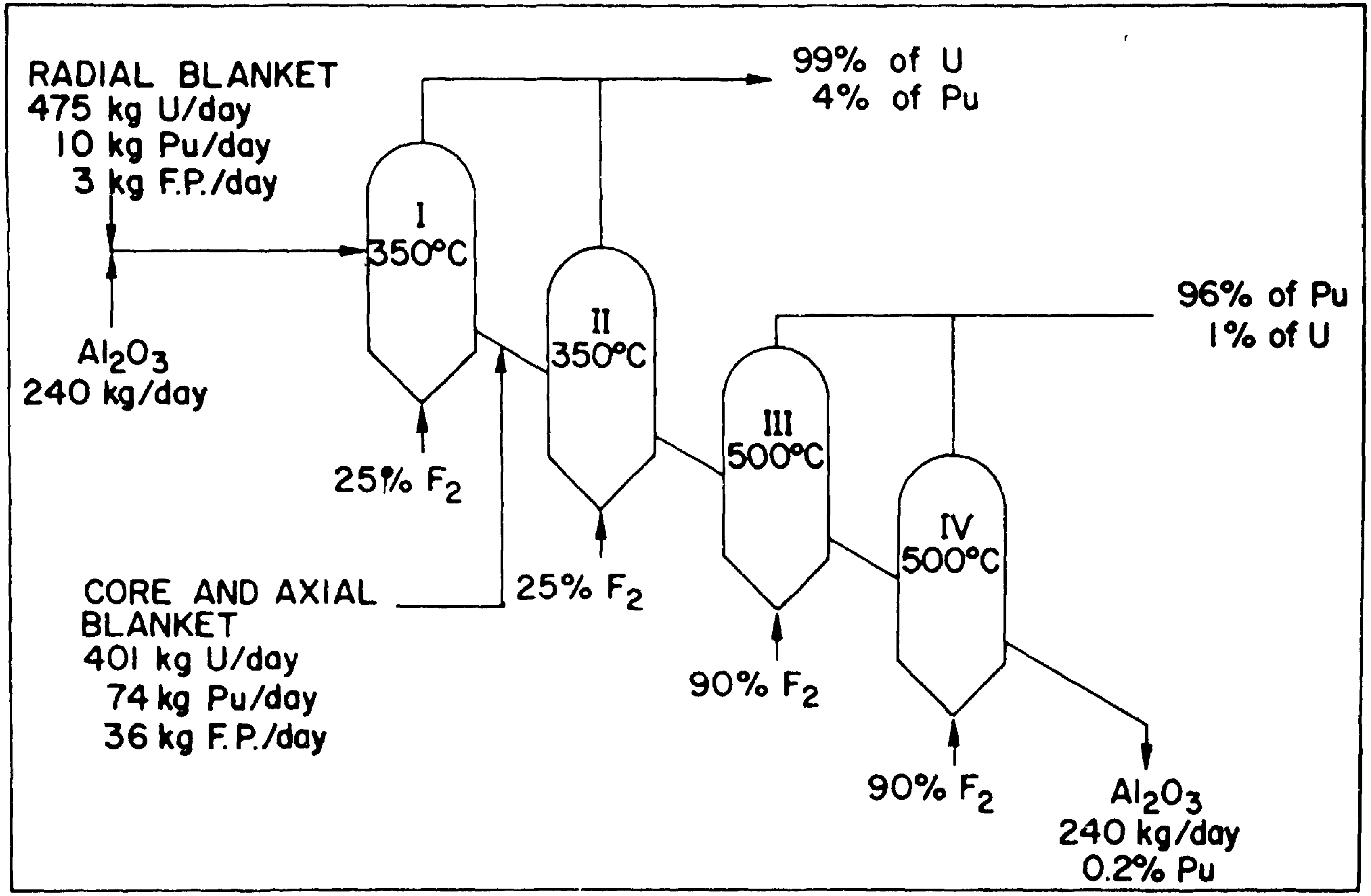

Figure 7. Continuous fluorination concept for LMFBR fuels.

REFERENCES

(1) LMFBR Program Office, Argonne National Laboratory, Liquid Metal Fast Breeder Program Plan, USAEC Report WASH-1108, Vol. 8 (August 1968).

(2) A. A. Jonke, Development of Volatility Processes for Thermal and Fast Reactor Fuels, Proceedings of the Rocky Flats Fluoride Volatility Conference, CONF-680610 (June 1968).

(3) V. P. Caracciolo and A. A. Kishbough, Electrolytic Dissolver for Power Fuels, USAEC Report DP-896 (October 1964).

(4) L. T. Lakey and W. B. Kerr, Pilot Plant Development of Electrolytic Dissolver for Stainless Steel Alloy Nuclear Fuels, Ind. Eng. Chem., Process Design and Develop., 6 174 (April 1967).

(5) C. D. Watson, et al, Head-End Processing of Spent LMFBR Fuel, Proceedings of 16th Conference on Remote System Technology, American Nuclear Society (March 1969).

(6) D. E. Ferguson, R. E. Blanco, General Survey of Reprocessing of Thermal Reactor Fuels, Proceedings of 1968 American Nuclear Society International Meeting, Washington, D. C. (November 1968).

(7) K. L. Rohde and J. A. Buckham, Effect of Irradiation on the Dissolution Characteristics of Important Fuel and Cladding Materials (This Panel)

(8) J. R. Bower and J. A. Buckham, Control of Fission Product Activity During Short-Cooled Fuel Processing Connected with the ICPP RaLa Process (This Panel).

(9) C. A. Blake, Jr., Solvent Stability in Nuclear Fuel Processing: Evaluation of the Literature, Calculation of Radiation Doses, and Effects of Iodine and Plutonium, USAEC Report ORNL 4212 (1967).

(10) ORNL Chemical Technology Division Annual Report for the Period Ending May 31, 1967, USAEC Report ORNL 4145 (1967).

(11) A.A. Kisbaugh, Performance of a multistage centrifugal contactor, USAEC Report DP-841 (1963).

(12) R. K. Steunenberg, Status of the Salt Transport Process for Fast Breeder Reactor Fuels, Nuclear Metallurgy Symposium, Reprocessing of Nuclear Fuels, Ames, Iowa, (1969).

(13) A. H. Sutton, et al, Reduction and Hydrofluorination of Uranium Concentrates by Fluid Bed Techniques, Chemical Engineering Progress Symposium Series No. 65, Vol. 62, pp. 20-30 (1966).

(11) A.A. KISBAUGH "Performance of a multistage centrifugal contactor, USAEC Report DP -841 (1963)

CONTROL OF FISSION PRODUCT ACTIVITY DURING SHORT-COOLED FUEL PROCESSING CONNECTED WITH THE ICPP RALA PROCESS

by

J. R. Bower
J. A. Buckham

ABSTRACT

The ICPP has routinely operated a process for recovery, within a 24-hour period, of 50,000 curies of barium-140 from two-day cooled MTR fuel elements; the accompanying 25,000 curies of iodine-131 released during dissolution and processing was trapped by scrubbers, charcoal adsorbers, and filters, allowing only approximately one curie to be released to the atmosphere.

(Work performed under the auspices of the Atomic Energy Commission under contract AT(10-1)-1230)

CONTROL OF FISSION PRODUCT ACTIVITY DURING SHORT-COOLED FUEL PROCESSING CONNECTED WITH THE ICPP RALA PROCESS

by

J. R. Bower
J. A. Buckham

The Idaho Chemical Processing Plant (ICPP) has undergone a unique experience in the development and operation of a process for the routine dissolution and recovery of high-activity fission products from highly irradiated MTR fuel elements, freshly discharged from the reactor. The ICPP "RaLa Process" was an outgrowth of smaller scale activities originally conducted at Oak Ridge for the recovery of radioactive barium--and ultimately, radioactive lanthanum, its daughter--from ORNL fuel slugs(1). Further developments by Oak Ridge National Laboratory, American Cyanamid Company at Idaho Falls, and finally by Phillips Petroleum Company at Idaho Falls resulted in the present RaLa process of the ICPP(1). This process operated for several years on a regularly scheduled basis at predetermined intervals with constantly improving fission product control, but is currently in standby status. The experience of routinely dissolving freshly discharged MTR fuel elements (two-day cooled), recovering up to 50,000 curies of Ba-140 within 24 hours of receipt of the element, and controlling the possible release of 25,000 curies of I-131 from each element is unique in fuel reprocessing history.

THE RALA PROCESS IN BRIEF

Equipment for the RaLa process at the ICPP was designed to process MTR fuel elements with less than two days' cooling after discharge from the reactor. Each element contains approximately 200 grams of uranium when charged into the reactor and is exposed for approximately 20 days at a power level of 30 megawatts to yield something over 50,000 curies of Ba-140. Processing of the fuel is accompanied by release of approximately 25,000 curies of I-131 which must be trapped and confined. Since the Ba-140 has a relatively short half life, it is necessary that the processing be completed approximately 24 hours after receipt of the elements from the reactor. Provisions were made to transfer the solution containing the uranium from the fuel assembly to the main ICPP processes for uranium recovery, and holdup capacity was provided for solutions containing Sr-90, so that this fission product can also be recovered if desired after a suitable decay period.

The process is a repetitive batch operation. Figure 1 shows a schematic flowsheet of the principal items of equipment. First, the element is charged to a tubular dissolver where it is dissolved by a caustic solution. This results in an aluminate solution containing a slurry of uranium-aluminum alloys, uranium oxides, and fission products. The slurry is transferred through an orifice metering device to a suspended-basket centrifuge where the solids are separated from the solution. The supernate continuously overflows the bowl to a waste tank. After separation, the solids are washed to reduce the aluminate content and to reduce contamination of the product. Nitric acid is then added to dissolve all solids except some silica which

SCHEMATIC FLOWSHEET OF RALA PROCESS EQUIPMENT

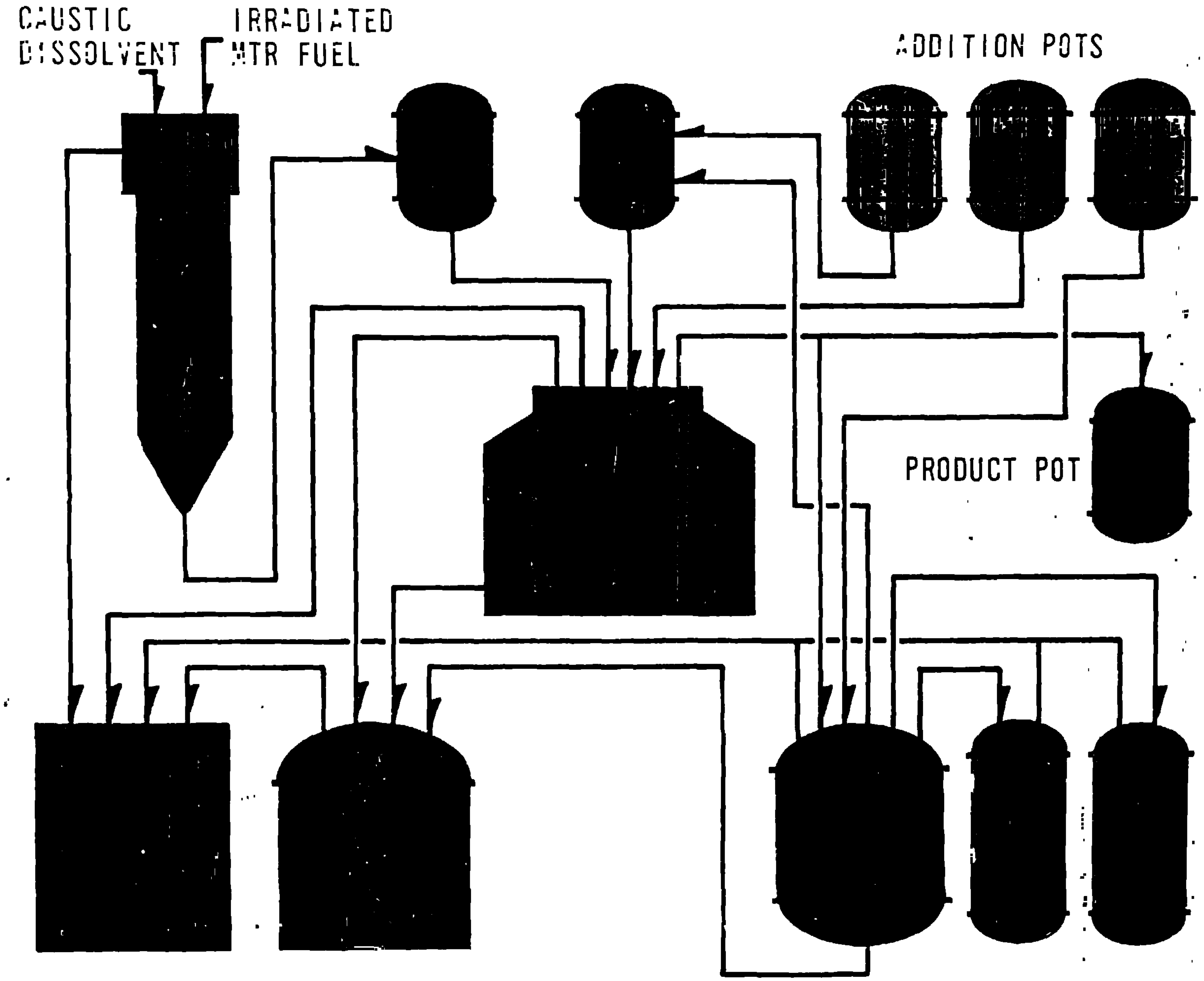

is derived from the brazing materials of the original element. The supernate, containing the uranium and fission products, is skimmed off to a supernate tank, and the silica is washed and then jetted out to waste. The supernate is then returned to the centrifuge feed tank where a barium carrier solution is added. Evaporation of the solution results in the partial precipitation of barium nitrate and strontium nitrate. Fuming nitric acid is added to complete the precipitation. The solution is then centrifuged, skimming off the supernate and leaving the solid barium and strontium nitrates in the centrifuge bowl. The uranium-containing supernate is transferred to interim storage to await recovery in the main ICPP process.

After washing, the nitrates are redissolved with water and a separation of strontium and barium is accomplished by precipitating the barium with a buffered chromate solution. After this first precipitation of the barium chromate, the supernate is skimmed off and the strontium solution is discharged to the strontium storage tank. The barium chromate is redissolved and reprecipitated to further purify barium. The final barium chromate precipitate is then treated with concentrated nitric acid to cause a metathesis of the barium chromate to barium nitrate. After reprecipitation to purify the barium nitrate, it is dissolved in water, skimmed to a product cup, evaporated to dryness, and loaded into a special shipping cask.

CONTROL OF FISSION PRODUCT IODINE

Because of only two days' cooling, compared to the 90-120 days' cooling normally provided for most other fuel elements before reprocessing, the RaLa process contributes large quantities of fission product iodine to the process off-gas. Thus, handling of process solutions and treatment of the off-gas in the RaLa process requires techniques and treatments that are not encountered in normal ICPP operations. All off-gas, from the RaLa uranium dissolution step through the remainder of the process--including vessel off-gas involved in dissolver and waste solution transfer steps--is processed through a scrubbing tower, a charcoal adsorber, and a final sintered-metal filter before being released through a 76-meter high stack. Figure 2 is a schematic representation of the off-gas processing equipment.

To achieve maximum control of iodine release, even with all of the off-gas treatment devices, it was found necessary to add iodine complexing agents to the absorber solution, to keep all solutions as cool as processing conditions would permit, to avoid all unessential transfers of solution--even to the exclusion of sampling when p[illegible]ible--and to permit all waste solutions to stand for the maximum possible aging period that process conditions would permit before being transported to the final disposal tanks.

(a) Scrubbing of Off-Gas

The RaLa process off-gases are passed through a packed scrubbing tower where they are contacted counter-currently by a wash solution of five percent nitric acid containing 0.001 molar mercuric nitrate and 0.001 molar mercurous nitrate. This absorber solution was selected after considerable testing and rejection of other solutions(2).

The initial choice for the scrubbing solution had been 1M sodium hydroxide containing 0.1 molar sodium thiosulfate, a quite effective combination for absorbing iodine. However, it was found that finely divided sodium carbonate (formed by action of air in the off-gas with the caustic and subsequent drying of entrained mist) was carried from the scrubber and caused plugging in flow meters and other locations downstream of the scrubber. The nitric acid, mercury-containing solution was finally adopted, since it eliminated any problem of solids carryover and was an effective scrubbing agent.

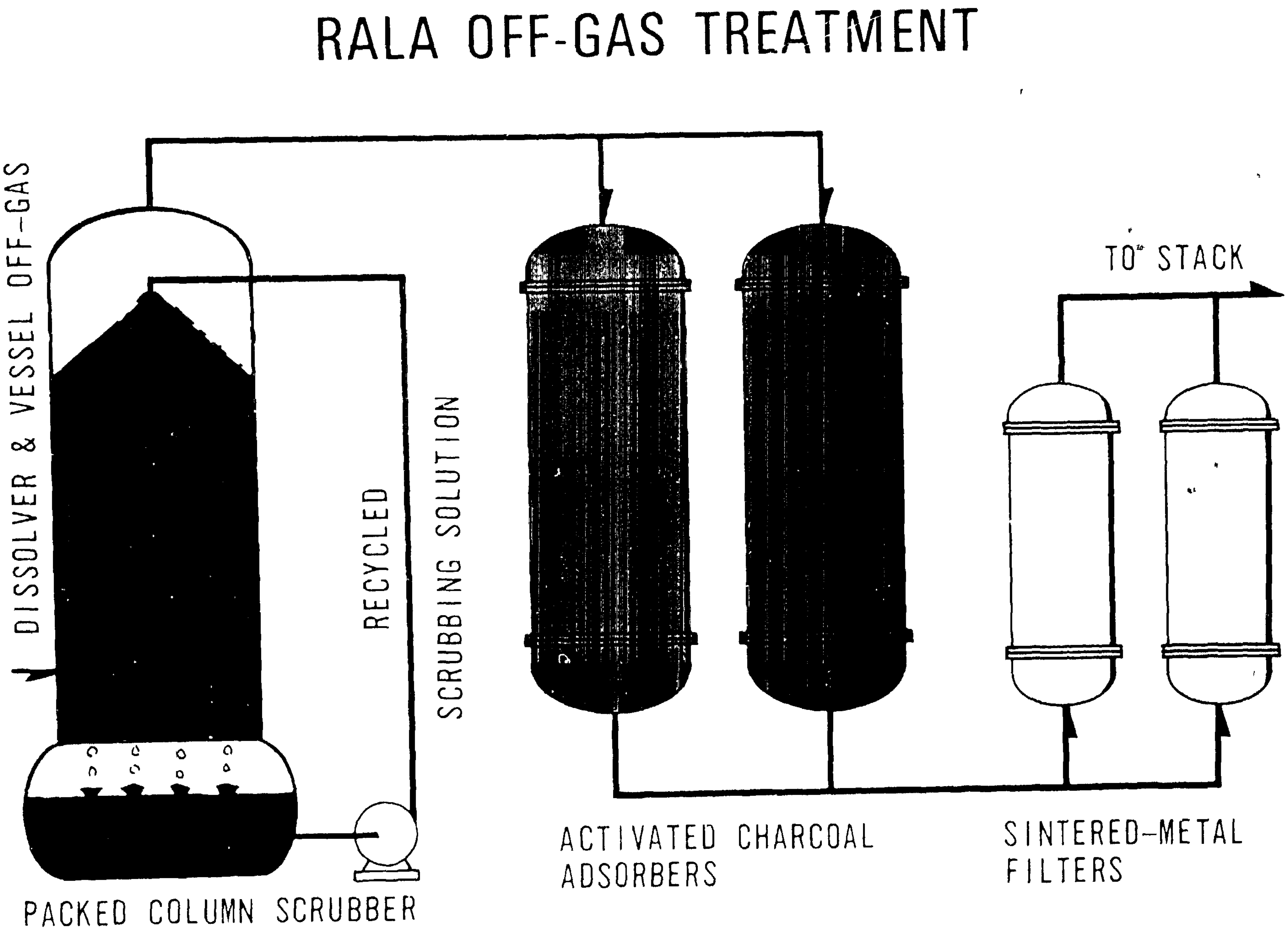

Figure 2. RaLa Off-Gas Treatment

Use of a scrubbing tower alone, however, was not found sufficient to permit processing and release of the off-gas under all weather conditions. Even considering the remote location of the ICPP with respect to population centers, it was not always possible to release the radioactive iodine remaining after scrubbing because of the possibility of the stack gases descending rapidly to the plant area.

(b) Adsorption of Iodine on Charcoal

An adsorption-filtering system consisting of activated carbon beds followed by sintered-metal filters was installed to permit operation of the RaLa process and discharge of off-gas independent of weather conditions. Two seven-cubic foot beds of activated charcoal were installed in parallel so that either or both, as desired, could be used to process the 15 to 20 scfm of off-gas from the process(2,3). Average velocity of gas through the beds was approximately 0.2 ft/sec and minimum capacity of each bed was 560 curies of I-131 based on observed adsorption in laboratory-scaled beds operating under the same conditions. Stainless steel sintered-metal filters (20 micron pore size) were installed to remove any charcoal fines carried from the beds before the off-gas was released to the stack. Quantitative evaluation of the charcoal bed effectiveness, as determined by detailed sampling of inlet and outlet streams, was never completely established because of the complexity of the operation and because the installation satisfactorily performed its intended function. An approximate decontamination factor of 500 for the adsorber-filter combination has been estimated from radiation monitor readings routinely taken on the inlet and outlet streams. Laboratory data indicate 99.99 percent removal of gaseous iodine by the activated charcoal, but only partial removal of iodine which may be carried through the bed on fine particulate material(2).

(c) Control of Iodine Release to the Off-Gas During Processing Operation

Discussions in the preceding two sections indicate the relative difficulty of removing radioactive iodine once it gets into the off-gas streams. Successful operation of the RaLa process has depended to no small extent on minimizing the amount of I-131 getting into the off-gas. Initial dissolution of the MTR aluminum-uranium alloy in 8 M sodium hydroxide gives a precipitate of uranium and fission products, containing approximately ten percent of the radioactive iodine, and a supernate of sodium aluminate containing the rest of the iodine; virtually no iodine is volatilized up to this point. The precipitate is separated in a batch centrifuge and the rest of the steps are carried out in the centrifuge or involve transfers to or from the centrifuge. These steps, involving the repeated use of concentrated nitric acid, generate most of the gaseous iodine released to the RaLa off-gas system. In addition to the iodine released by dissolution of the uranium-fission product solids in nitric acid, more iodine is released each time an acidified solution is agitated, whether by transfer to another vessel or by recirculation to obtain a representative sample. Each addition of reagent to the centrifuge, accomplished by injection with compressed air, can result in escape of iodine-contaminated gas from the centrifuge shaft seal if excess pressure is used.

To minimize iodine release during these necessary processing steps, a number of precautions were instituted and made part of the operating procedures as experience was gained. Table I records significant process improvements in the course of the RaLa operation and lists I-131 availability and release figures to demonstrate what was accomplished. In brief: (1) low concentrations of mercuric nitrate (0.001 to 0.005 molar Hg) were added to nitric acid solutions to help complex and hold iodine; (2) temperatures were held to a minimum compatible with the reaction steps; (3) transfers and agitation of solutions were held to a minimum and were carried out with lowest practicable jetting or sparging pressures; and (4) sampling of solutions

TABLE I

RELEASE OF I-131 DURING RALA OPERAT)

Runs	Curies I-131 Available[a]	Curies I-131 Released to Stack[b]	% Release	Scrubbing Solution	Procedure/Equipment Changes
1 to 5	16,810	172.6	1.03	NaOH	
6 to 15	20,676	131.4	0.64	NaOH	Improved seal on centrifuge
16 & 17	14,794	51.5	0.35	NaOH	Charcoal beds installed
18 to 23	22,102	49.4	0.22	NaOH	Reduced sampling
24	22,382	40.5	0.18	Acid[c]	Changed scrubbing solution
25 & 26	22,373	4.1	0.018	Acid	Discontinued heating of centrifuge jacket. Added $Hg(NO_3)_2$ to final supernate receiver.
27 to 40	22,993	3.53	0.015	Acid	Added $Hg(NO_3)_2$ to uranium supernate receiver.
41 to 51	25,817	1.77	0.007	Acid	Added cooling water to centrifuge jacket.
52 to 62	25,635	1.85	0.007	Acid	Added $Hg(NO_3)_2$ to acid used in initial supernate waste receiver.
63 to 74	25,419	2.19	0.009	Acid	Added $Hg(NO_3)_2$ to acid used to dissolve centrifuge cake. Installed isokinetic sampler at CPP stack.
75 & 76	24,715	12.76	0.05	Acid	"Crash" decontamination required after Run 76.
77 to 79	25,778	0.86	0.003	Acid	Application of all precautions

---

(a) Average curies available per run.

(b) Average curies released during a run and subsequent cleanup period.

(c) Acid scrubbing solution composition is 0.846 $\underline{M}$ HNO_3, 0.001 $\underline{M}$ Hg^+, 0.001 $\underline{M}$ Hg^{++}.

was reduced to the bare minimum for operation of the process. The cumulative effect of all precautions and off-gas treatments was to accomplish the dissolution and processing of a two-day cooled MTR element containing 25,000 curies of I-131 with the release of only approximately one curie of iodine to the plant stack.

RARE GAS CONTROL

Radioactive rare gases (xenon and krypton) are released during initial dissolution of the irradiated MTR fuel elements in $8\ \underline{M}$ NaOH and, under normal circumstances, these gases are released directly to the 76-meter high stack for diffusion into the atmosphere. Radioactive iodine is not released during this caustic dissolution step and constitutes no hazard at this stage. Provision is made to divert the off-gas containing these noble gases to a 280 cubic meter gas holder (located behind an earth-embankment shield) for temporary storage during weather conditions when the gas clouds might be expected to hover near the ground and give a high radiation background. As soon as weather conditions permit, the gas is released to the stack and no attempt is ever made to hold off-gases for aging. The gas holder is never used to confine gases containing radioactive iodine; these gases are all treated by the other processes enumerated to prevent hazardous quantities of iodine from reaching the stack.

RADIATION LEVELS, PROCESS SHIELDING, AND SPECIAL HANDLING EQUIPMENT(1)

Radiation levels within the cell containing the processing equipment are on the order of 10^9 R/hr so that organic materials such as soft gaskets, packing, plastic tubing, and resinous insulating materials, are avoided. The cell walls are constructed of six-foot thick standard concrete (or equivalent in other materials when windows, slide valves, etc, penetrate the wall). This permits a two-day cooled MTR element to be handled with less than 1 mr/hr radiation outside the cell wall.

Individual pieces of equipment inside the cell are shielded with from four to twelve inches of lead to permit entry into the cell with a minimum of equipment decontamination if repairs are required. Actually, very few entries have been required in several years of operation.

The fuel element dissolver is an eight-inch diameter tubular dissolver designed to dissolve one MTR element at a time in a 52-liter batch of caustic solution. The centrifuge is a suspended, enclosed, solid bowl model with water channels in the walls to permit either heating or cooling, as desired. Calibrated skimmers permit controlled removal of supernate solutions.

The MTR fuel element charger is shielded with 14½ inches of lead and holds the element in a water-filled chamber; cooling is provided by a thermosyphon circulating system and air-cooled finned radiators on the outside of the cask.

CONCLUSIONS

The ICPP has demonstrated the ability to transport and dissolve two-day cooled MTR fuel elements, to separate the uranium from the radioactive barium and strontium, and to purify and ship up to 50,000 curies of Ba-140 within 24 hours after receipt of the fuel element. Processing of these solutions, containing up to 25,000 curies of iodine-131, can be controlled to release no more than approximately one curie of I-131 to the stack. Specific conclusions with respect to radioactive iodine control are:

(1) Five percent nitric acid containing 0.001 M mercuric nitrate and 0.001 M mercurous nitrate is an effective scrubbing solution in a counter-current packed tower and minimizes iodine entrainment problems.

(2) One M sodium hydroxide containing 0.1 M sodium thiosulfate is also an effective scrubbing agent but is not recommended because it gives rise to entrainment of dried solid particles which can plug equipment and which carry iodine activity through carbon adsorber beds.

(3) Carbon adsorber beds are effective cleanup devices for gaseous iodine following major removal of iodine in a scrubber system.

(4) Carbon adsorber beds are not effective devices for trapping iodine activity which is incorporated in finely divided solids which may reach the adsorber beds.

(5) Addition of 0.001 to 0.005 M mercuric nitrate to nitric acid solutions used in processing freshly discharged fuel assists in complexing and holding the iodine in solution.

(6) Process solutions containing iodine should be kept at as low a temperature as process requirements permit.

(7) Process solutions containing iodine should be agitated or disturbed as little as possible.

REFERENCES

(1) B. M. Legler, et al, Startup Operation of a Production Facility for Separating Barium-140 from MTR Fuel, IDO-14414, September 1957.

(2) G. K. Cederberg, D. K. MacQueen, Containment of I-131 Released by the RaLa Process, IDO-14566, October 1961.

(3) G. K. Cederberg, J. R. Bower, Minimizing Gaseous and Particulate Activity in Idaho Chemical Processing Plant Off-Gas, Report of Sixth AEC Air Cleaning Conference, TID-7593, pp. 9-17, July 1959.

EFFECT OF IRRADIATION ON THE DISSOLUTION CHARACTERISTICS OF IMPORTANT FUEL AND CLADDING MATERIALS

by

K. L. Rohde
J. A. Buckham

ABSTRACT

Reactor irradiation can have significant effect on the dissolution rates of fuel and cladding materials in various aqueous reagents due to changes in composition and structure. Reported data on these effects are reviewed. Aluminum-3% uranium and aluminum-7% plutonium alloys become more passive. Zirconium-4% uranium alloy becomes more reactive, while Zircaloy-2 cladding on the alloy becomes slightly less reactive. The reactivity of Type 304 stainless steel changes very little with fast neutron irradiation. Uranium oxide-plutonium oxide and thorium oxide-uranium oxide appear to change little or become more reactive.

(Work performed under the auspices of the Atomic Energy Commission under contract AT(10-1)-1230)

INTRODUCTION

With the development of higher performance fuels for test reactors and power reactors, including fast breeder reactors, the importance of irradiation on the dissolution characteristics of nuclear fuels and cladding alloys is becoming of increasing importance. Some fuels become so passive to chemical attack that conventional aqueous dissolution techniques are not feasible or are usable only at a significant penalty in excess processing time and cost. In other cases there is concern that alloys containing fissionable material might become passive and distort criticality control concepts based on essentially uniform dissolution of all portions of the element. Additionally, in many cases available dissolvers are already subject to severe corrosion, and while more effective chemical reagents might be known for resistant fuel materials, great care must be exercised to obtain satisfactory productive life from these vessels.

For these reasons, studies of the dissolution characteristics of highly irradiated fuels are of continuing importance.

Studies over the past several years in the United States on six types of fuel or cladding materials of current interest are summarized in this paper.

ALUMINUM-URANIUM ALLOYS

In a continuing study of the effect of alloy composition and irradiation upon the mercury-catalyzed dissolution of aluminum-uranium alloys in nitric acid, a series of experiments exploring the effects of acid and catalyst concentrations on the dissolution rate of highly irradiated fuel was undertaken at the Idaho Chemical Processing Plant(1). The effect of catalyst concentration on the dissolution rate for the irradiated alloy can be compared to the effects on various unirradiated alloys which were studied earlier(2). Because no dissolution rate rapid enough for economic plant use could be achieved with acid, dissolution in sodium hydroxide also was tried.

The results obtained do not offer any suggested means of obtaining a significant increase in the rate of dissolution of the highly irradiated aluminum-uranium alloy in nitric acid However, caustic dissolution--as demonstrated in this study and as already used in the RaLa process at ICPP--or electrolytic dissolution may be applicable.

Certain fully enriched uranium-aluminum alloy slugs from Chalk River are among the most highly irradiated fuel which is processed in significant quantity at ICPP. Those slugs processed in the campaign of 1963 showed approximately 45 percent burnup and were very slow to dissolve in mercury-catalyzed nitric acid(3) as had been the case with other fuel from the same source processed earlier. One of these slugs was retained for laboratory studies and was cut into wafers of about 18 grams each for the following studies.

For the acid dissolution, reagents of 4 and 6 M nitric acid containing 0.005 to 0.05 M mercuric nitrate were charged in proportions to give a mole ratio of acid to aluminum of 4.8. For the caustic dissolution, 5 M sodium hydroxide was charged in proportions calculated to yield a mole ratio of base to aluminum of about 4. All dissolutions were performed at the boiling point of the reagents at about 650 mm of mercury. Table I gives the results of these tests in terms of the length of time required to dissolve 75 and 100 percent of the aluminum in the wafer. It is clear that during the earlier part of the batch dissolution the higher catalyst concentration did lead to an increased dissolution rate. However, this had no significant effect upon the time required for total dissolution. The data provide no basis for choice between the levels of acid. Dissolution in 5 M sodium hydroxide was relatively rapid. Although the caustic dissolution must be followed by an acid dissolution of the uranium oxides requiring additional time, it would appear that the total time cycle with a caustic dissolution might be almost an order of magnitude shorter than that with mercury-catalyzed nitric acid.

In Table II the results of this study with highly irradiated alloy are compared to experimental experience with unirradiated aluminum alloys of various compositions(2). The earlier work had indicated that the alloys could be divided into two classes based on the response of the dissolution rate to an increase in mercuric nitrate catalyst from 0.005 to 0.05 M: (a) the aluminum alloys of silicon and nickel showed a hundred-fold increase in dissolution rate when the catalyst concentration was increased; (b) the alloys with copper did not increase in reactivity when the catalyst concentration was increased. The highly irradiated aluminum-uranium alloy appears to fall more nearly in the latter class. In a further comparison, the copper alloys did not respond to "contact activation" in earlier tests(2), nor did the highly irradiated aluminum alloy respond to such treatment in a plant test described in the following paragraph.

A contact activation technique for accelerating the dissolution was tested in the plant. This technique was suggested by the favorable results which were obtained when passive aluminum alloys were dramatically activated by contact with active, high purity aluminum. In the plant test, crumpled foil of high purity aluminum (nominally 99.999 percent pure) was charged to one of two batch dissolvers in such quantity as to cover the bottom of the vessel. The weight of the foil was insignificant compared to the weight of the slugs. The slugs were charged and dissolution initiated in 5.5 M nitric acid-0.05 M mercuric nitrate. The reagent was added and product removed in four cuts having volumes of 600, 600, 300, and 250 liters. As in the past, the cladding and end pieces dissolved rapidly in both dissolvers as shown in Figure 1, and the dissolution of the uranium-aluminum alloy was extremely slow even with contact activation.

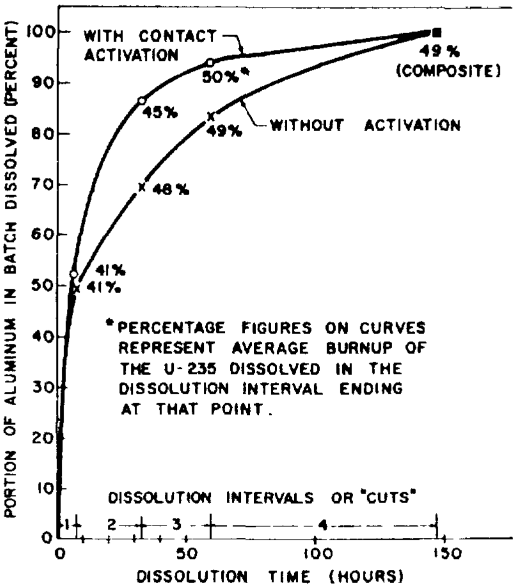

Figure 1
Dissolution of Chalk River fuel.

The data shown in Figure 1 indicate a possible marginal rate advantage for the batch of slugs in contact with the foil, but no effect of process significance. Calculation of the uranium-235 burnup in the various cuts from the two batches of slugs suggests a significant

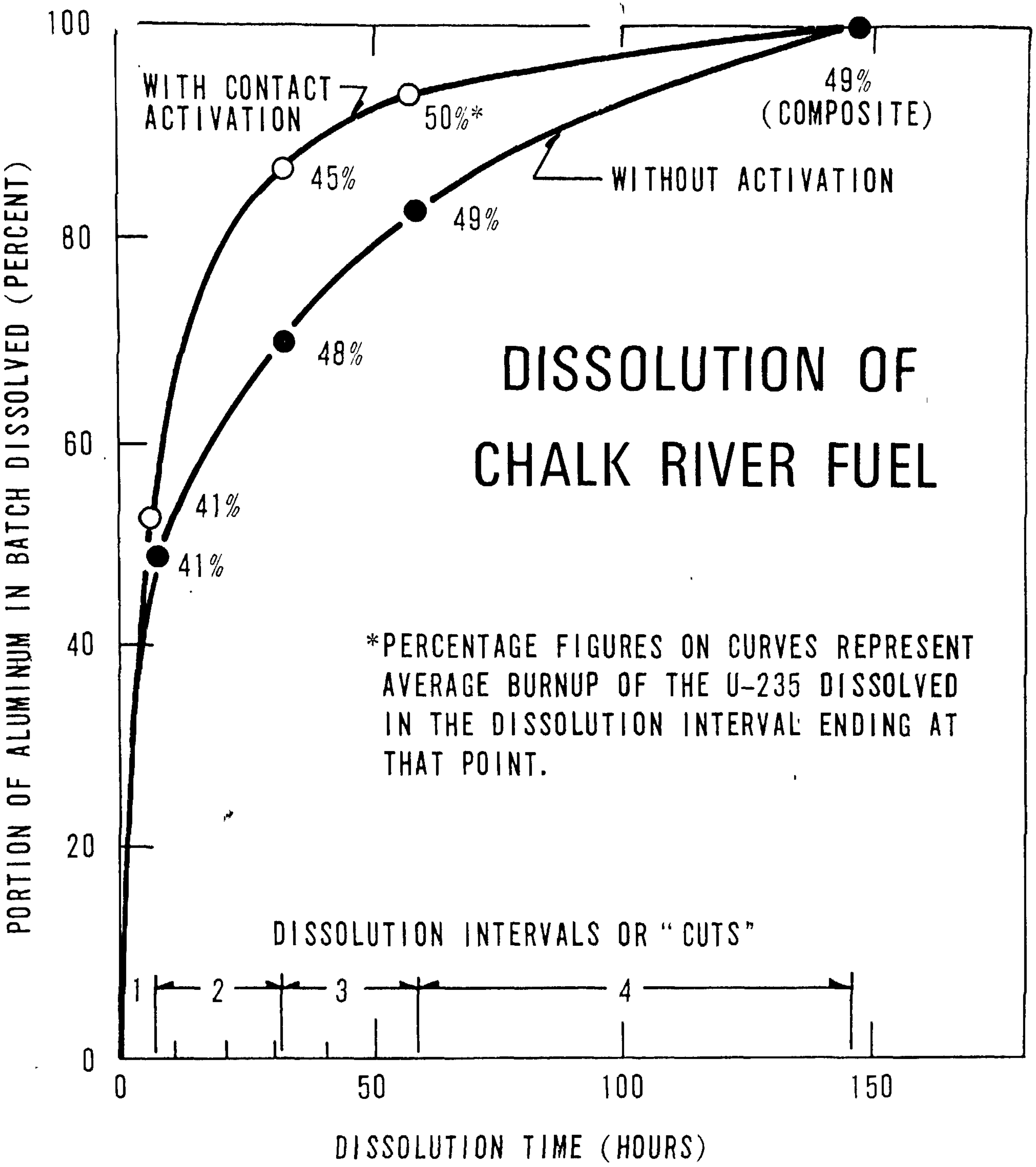

DISSOLUTION OF CHALK RIVER FUEL

*PERCENTAGE FIGURES ON CURVES REPRESENT AVERAGE BURNUP OF THE U-235 DISSOLVED IN THE DISSOLUTION INTERVAL ENDING AT THAT POINT.

TABLE I

BATCH DISSOLUTION TIMES FOR WAFERS OF HIGHLY IRRADIATED ALUMINUM-URANIUM ALLOY

Reagent[a]	Time for 75% Dissolution (min)	Time for 100% Dissolution (min)
4M HNO_3; 4.8 moles/mole Al 0.005M $Hg(NO_3)_2$	1220	2750
4M HNO_3; 4.8 moles/mole Al 0.05M $Hg(NO_3)_2$	600	2360
6M HNO_3; 4.8 moles/mole Al 0.005M $Hg(NO_3)_2$	1110	2530
6M HNO_3; 4.8 moles/mole Al 0.05M $Hg(NO_3)_2$	730	$\sim$ 2200
5M NaOH; 4 moles/mole Al	21	65
5M NaOH; 4 moles/mole Al	23	220

---

[a] Tests were performed at the boiling point of the reagents.

TABLE II

EFFECT OF CATALYST CONCENTRATION ON RATE OF DISSOLUTION OF ALUMINUM ALLOYS

Alloy	Time for 75% Dissolution[a] (min)	
	0.005M $Hg(NO_3)_2$	0.05M $Hg(NO_3)_2$
Al-3% U[b] (irradiated fuel)	1110	730
Al-3.5% Cu (1033)[c]	700	>300
Al-4.8% Cu-1.2% Si (1091)[c]	350	>300
Al-2.9% Si (774)[c]	1460	15
Al-1% Ni (8001)[c]	1600	15
Al (unalloyed)	10	10

---

[a] Tests were conducted in boiling 6M nitric acid.

[b] Composition _after_ about 45% burnup of the original U-235 in the >90% enriched fuel.

[c] Coupons fabricated from Alcoa spectrochemical standards of this designation.

effect of this factor on the dissolution rate. The percentage burnup is shown beside each data point in Figure 1. Portions of the alloy in which the uranium burnup average 41 percent dissolved rapidly in the first cut. Later cuts contained uranium of typical higher burnup, with the last cuts being 49 to 50 percent burnup. Since the surface of a slug-type fuel is presumed to contain the region of greatest burnup, the shell is presumably penetrated in places and the interior preferentially dissolved, leaving a difficultly dissolved shell. This mechanism is substantiated by the observation that wafers cut from these slugs dissolved in laboratory tests from the inside out.

PLUTONIUM-ALUMINUM ALLOY

The dissolution rate of highly irradiated 7 percent plutonium-aluminum alloy in nitric acid has been reported by the Savannah River Laboratory(4,5). At about 60 percent burnup of the plutonium-239, a rate of 11 mg/(cm^2)(min) was experienced in 5 M HNO_3-0.05 M $Hg(NO_3)_2$-0.02 M HF. At 99 percent burnup the rate was about 0.5 mg/(cm^2)(min) in a similar reagent. As with aluminum-uranium alloy, it was found that rapid dissolution could still be obtained in sodium hydroxide.

Instantaneous dissolution rates in HNO_3-$Hg(NO_3)_2$ solutions were measured for Plutonium Recycle Test Reactor (PRTR) fuel of 1.8 weight percent plutonium, 2 percent nickel, and either type 1345* or Type 8001** aluminum(6).

Pu-Al alloys irradiated to 28-48 percent burnup of their initial Pu-239 content, as well as unirradiated Pu-Al alloys, were studied in 0.002 to 0.02 M $Hg(NO_3)_2$ solution at HNO_3 concentrations as high as 4 M. Irradiated material was found to activate only in dilute (approximately 1 M) HNO_3 solutions.

A key property of irradiated PRTR Pu-Al alloys was that, after activation in dilute HNO_3 was achieved, concentrated HNO_3 could be added to the dissolvent to adjust its acidity to 4 to 6 M without passivating the alloy. Advantage of this property was taken in defining an activation-dissolution procedure for use in the Hanford Redox plant. This scheme has been used in the Redox plant to dissolve successfully PRTR Pu-Al fuel assemblies in several separate campaigns.

ZIRCALOY CLADDING AND ZIRCONIUM-URANIUM ALLOY FUELS

In order to assure safe operation of a continuous dissolver for processing PWR-type uranium-zirconium alloy fuels, it was necessary to determine that there would be no great accumulation of uranium-235 in the dissolver during extended operation. Such an accumulation could occur if the uranium-containing meat alloy were to dissolve at an appreciably slower rate than the cladding alloy, Zircaloy-2.

The relative rates of dissolution for meat (4% uranium after irradiation) and cladding alloys were determined(7) in a typical dissolvent, 5.2 M hydrofluoric acid, 0.34 M boric acid, and 0.03 M nitric acid. Duplicate determinations were made for both unirradiated fuel and fuel having greater than 50 percent burnup. From these determinations, an estimate was made of the absolute dissolution rates for meat and cladding

---

* Greater than 99 percent Al

**98+ percent Al, 1 percent Ni

alloys. At about 95°C (with an insignificant amount of zirconium dissolved) the approximate initial dissolution rates were:

Unirradiated: cladding - 80 mg/(cm^2) (min); meat - 160 mg/(cm^2) (min)

Irradiated: cladding - 25 mg/(cm^2) (min); meat - 500 mg/(cm^2) (min)

Interestingly, irradiation caused a decrease in the dissolution rate of the Zircaloy cladding but an increase in the dissolution rate of the uranium-zirconium alloy meat. The ratio of the rate of dissolution of cladding to the rate of dissolution of meat was about 0.5 for the unirradiated fuel and about 0.05 for the irradiated fuel. Therefore, it was concluded that the meat material will dissolve essentially as rapidly as it is exposed by the dissolution of the cladding and that there will be no accumulation of uranium in the dissolver.

STAINLESS STEEL CLADDING AND STAINLESS STEEL-CLAD FUELS

Galvanostatic measurements on irradiated and unirradiated Type 304 stainless steel made in 5 M H_2SO_4 at 25°C have been evaluated for indication of effects of irradiation on either the chemical or electrochemical dissolution(8). All irradiated specimens were from a single 40-inch long tube irradiated in EBR-II. The portion of the tube in the highest fast flux had been exposed to an integral fast neutron flux of about 5×10^{22} n/cm^2 at about 400°C over a period of 900 days. Cobalt-58 and manganese-54 were the most significant activation products in these specimens. Specimens were also taken from portions of the tube where the fast flux had been at least an order of magnitude lower and the thermal flux more important, as evidenced by the predominance of cobalt-6 over cobalt-58. For all specimens, unirradiated and the two types of irradiated materials, the passive region on the current density-potential plot extended from -0.28 to +1.12 volts, with respect to the calomel electrode. At potentials more positive than this, there was a rapid increase in current density with increasing potential for all specimens. These observations suggest no effect due to irradiation on the reactivity of the stainless steel in chemical dissolution in sulfuric acid or in electr chemical dissolution.

Fully irradiated EBR-II fuel (2 percent burnup of uranium-235 in 52 percent enriched uranium) has been dissolved in nitric acid in a small scale electrolytic dissolver(9). All aspects of the dissolution proceeded as readily with the irradiated material as with similar unirradiated material.

PLUTONIUM OXIDE-URANIUM OXIDE

The dissolution of UO_2-0.5 percent PuO_2(10) and UO_2-20 percent PuO_2(11) has been report by Pacific Northwest Laboratory and Oak Ridge National Laboratory, respectively. In th and other work it has generally been observed that where the conditions of either fuel manufacture or irradiation lead to a solid solution of PuO_2 in UO_2, the PuO_2 can be dissolved with the UO_2 in nitric acid without added fluoride. If a solid solution has not been formed, fluoride is required to insure dissolution of PuO_2. This effect appears t be more significant than any effect of irradiation in determining the ease of dissoluti of this mixture.

In the work at Pacific Northwest Laboratory, it was specifically noted that with UO_2-0. percent PuO_2 mixtures the plutonium became more completely soluble in nitric acid alone as the irradiation time of the fuel was increased. However, for general application wherein complete conversion of PuO_2 to a solid solution with UO_2 could not be guaranteed flowsheets using about 10 M nitric acid with about 0.1 M NH_4F were used. Successful dis solution of both unirradiated and irradiated (to 5000 MWd/ton) oxide was achieved.

Stainless steel clad UO_2-20 percent PuO_2 was used in the work done at ORNL. Irradiation levels ranged up to 99,000 MWd/ton. It was found that shearing the elements into short pieces and then dissolving the oxide with nitric acid was preferable to chemical decladd with sulfuric acid solutions because of excessive (1.5%) losses of uranium and plutoniur Also, about 60 percent of the fission-product cesium dissolved in the sulfuric acid, crea a waste management problem More than 99 percent of the PuO_2-UO_2 dissolved in less thar five hours in all concentrations of nitric acid greater than 3 M. No fluoride was neede to accelerate the reaction

THORIUM OXIDE-URANIUM OXIDE

Tests at Oak Ridge National Laboratory(12) with sol-gel derived ThO_2-4 percent UO_2 in boiling 13 M HNO_3-0.04 M NaF-0.04 M $Al(NO_3)_3$ indicated that irradiation increased the dissolution rate over that for the unirradiated oxides. Up to 95 percent of the oxides were in solution at eight hours and 99.8 percent at 24 hours. Irradiation levels varied from 3000 to 98,000 MWd per ton of heavy metal.

CONCLUSIONS

The effects of neutron irradiation on these eight important fuel or cladding materials are summarized in Table III. Exposure in a reactor can result in heat treating, changes in chemical composition, and damage to the structure of fuel or cladding on an atomic or macro scale. In some cases the change in dissolution behavior can be readily associated with one of these effects. The increase in ease of dissolution of PuO_2 as it more completely forms a solid solution with UO_2 on prolonged exposure in the reactor is a good example. In other cases where the changes in composition or metallurgy are less clearly understood, the reason for the changes in dissolution characteristics with irradiation cannot be easily explained. No overall generalization among the various alloys or oxides appears reasonable from the data, but there is good agreement in the results from various laboratories working with the same alloys or oxides. A more complete understanding of the effects of irradiation on the chemical reactivity of these alloys and oxides appears dependent upon a greater understanding of the fundamental changes in composition and structure which occur on irradiation.

TABLE III

SUMMARY OF EFFECT OF IRRADIATION ON THE DISSOLUTION RATE OF FUEL OR CLADDING MATERIALS

Fuel or Cladding Alloy	Dissolution Process	Irradiation Level	Effect of Irradiation Upon Dissolution Rate
Aluminum-3% uranium	HNO_3-$Hg(NO_3)_2$ solution	45% BU	Passivated, even at 0.0 $Hg(NO_3)_2$ catalyst, comp to unirradiated alloy
Aluminum-7% plutonium	HNO_3-$Hg(NO_3)_2$ HF solution	60 & 99% BU of Pu-239	Large decrease in react between 60 and 99% BU
Zirconium-4% uranium	HF solution	50% BU	200% increase in dissol rate
Zircaloy-2	HF solution	Cladding on fuel above	70% decrease in rate
Stainless steel Type-304	5M H_2SO_4	5×10^{22} n/cm^2 (fast)	Galvanostatic measurements show no tendency increased passivation
UO_2-20% PuO_2 (Solid solution)	HNO_3 solution	0-99,000 MWd/T	None
UO_2-0.5% PuO_2 (Mixture)	HNO_3-dilute fluoride solution	0-5,000 MWd/T	Rate increased as expos in-reactor led to solid solution
ThO_2-4% UO_2	13M HNO_3-0.04M NaF-0.04M $Al(NO_3)_3$	0-98,000 MWd/T	Dissolution rate increa with irradiation

REFERENCES

1. J. R. Bower, (ed), Chemical Processing Technology Quarterly Progress Report, Octobe December, 1963. USAEC Report IDO-14635 (1964).

2. R. D. Fletcher, et al, Effect of Alloying Constituents on Aluminum Dissolution Rate USAEC Report IDO-14606 (1963)

3. J. R. Bower, (ed), Chemical Processing Technology Quarterly Progress Report, July-September, 1963. USAEC Report IDO-14625 (1963).

4. W. C. Perkins, Dissolution of Pu-Al Alloy, USAEC Report DP-702 (1962).

5. W. C. Perkins, Dissolving Highly Irradiated Pu-Al Alloy, USAEC Report DP-874 (1964)

6. W. W. Schultz, Aqueous Decladding and Dissolution of Plutonium Reactor Fuels, Part Plutonium-Aluminum Alloy Fuels, USAEC Report BNWL-204 (1966).

7. J. R. Bower, (ed), Chemical Processing Technology Quarterly Progress Report April-June 1963, USAEC Report IDO-14621 (1963).

8. L. C. Lewis and B. C. Musgrave, Electrolytic Behavior of Cladding Alloys for Nuclea Fuels, USAEC Report IN-1295 (1969).

9. B. C. Musgrave, (ed), Chemical Development for Processing EBR-II Fuel 1967-1968, USAEC Report IN-1285, (1969).

10. W. W. Schultz, Aqueous Decladding and Dissolution of Plutonium Recycle Test Reactor Fuels Part 2 PuO_2-UO_2 Fuels, USAEC Report BNWL-204 PT2, (November 1966).

11. J. H. Goode, Hot-Cell Dissolution of Highly Irradiated 20% PuO_2 -80% UO_2 Fast-React Fuel Specimens, USAEC Report ORNL-3754 (October 1965).

12. J. H Goode and J. R. Flanary, Dissolution of Irradiated, Stainless Steel-Clad ThO_2-UO_2 in Fluoride-Catalyzed Nitric Acid Solutions: Hot Cell Studies on Pelletized, Arc-Fused and Sol-Gel-Derived Oxides, USAEC Report ORNL-3725 (January 1965).

Fast Contactors In The WAK

By W. Knoch and B. Roth

Gesellschaft zur Wiederaufarbeitung von Kernbrennstoffen mbH
Leopoldshafen bei Karlsruhe (Germany)

Gesellschaft für Kernforschung
Institut für Heisse Chemie
Leopoldshafen bei Karlsruhe (Germany)

Abstract

A centrifugal extractor test facility will be integrated into the WAK reprocessing plant (Wiederaufarbeitungsanlage Karlsruhe). The extractor is described and the results of extensive laboratory tests are presented. Flow-sheets and the installation of equipment are briefly discussed.

1 Introduction

The first German reprocessing plant (1) - WAK - with a nominal throughput of 40 t/a has an intermediate character between test facility and industrial plant. The plant is presently under construction and scheduled to start operation in fall 1970. The plant has been designed to process slightly enriched uranium oxide fuels with burnup of about 20,000 MWd/t.

Recent achievements in the reactor fuel technology provide the possibility of higher burnup of fuels in thermal reactors, advanced converters and fast breeder reactors. The technical problems inherent to the aqueous reprocessing of such fuels have to be accounted for.

High burnup together with economically acceptable cooling times leads to intense radiation of the spent fuel due to the high content of fission products and actinide isotopes. One of the main problems in aqueous reprocessing of such fuel is to minimize radiation effects on solvents and aqueous process solutions to prevent the decrease of separation efficiency. Short residence times in the extraction equipment essentially contribute to the decrease of radiation damage.

2 Flow-sheet Considerations

Conventional mixer-settler batteries have been designed and will be used in the WAK for the extraction steps. The residence time of the organic phase in the high active region is about 15 minutes. The use of fast contactors is most advantageous in the co-extraction step (HA) of the first extraction cycle where the majority of the fission products is still present. At comparable throughput the residence time could be decreased by a factor of 20. A simplified flow-sheet of the WAK extraction cycles is given in fig. 1. The extraction cycles are succeeded by a silicagel tail-end treatment for uranium and an anion exchange step for final plutonium purification.

The use of fast contactors not only reduces the residence time but also permits higher throughputs. This is important for the processing of solutions with high content of fissile materials, which requires small critically safe equipment.

Another mode of application is an additional co-decontamination cycle preceding the first extraction cycle. Reconcentration of the dilute strip solutions would then become necessary before entering the first extraction cycle.

Although laboratory tests of the fast contactor type to be used (see below) gave satisfactory results, the reliability and stable performance of multistage batteries under rigorous plant conditions have not yet been proven. As there is ample time before the use of fast contactors becomes inevitable for the processing of high-burnup fuels, it has been decided to start with the installation of only two batteries of centrifugal contactors, which constitute a third extraction cycle for uranium. Due to the low activity level at this point the contactors remain easily accessible for adjustment, maintenance and test instrumentation. Only after extensive testing during plant operation a replacement of the conventional mixer-settlers by centrifugal extractors in the highly active section will be considered.

The chemical purex-type flow-sheet of the second uranium cycle cannot be used in the third cycle without change. The product of the second cycle is a low acid, dilute uranium solution. No intermediate evaporation is planned. Instead, the acid concentration is raised to 2.5 M resulting in more favorable distribution of uranium. This improves the ruthenium decontamination.

The extraction and strip batteries have 12 stages each. Fig. 2 shows the proposed flow-sheet of the third uranium cycle. This additional cycle will result in a further improved overall decontamination factor, thus reducing the need for rework operations.

3 Contactor Equipment

The extractors designed for WAK are similar to those developed at the Savannah River Laboratory in the United States.[2)] The design principle of a compact WAK centrifugal contactor stage is shown in Fig. 3.

Its main components are a mixing chamber, a rotating bowl to separate the mixture in a centrifugal field, circular weirs to remove the phases separately and a driving motor for both bowl and mixer. The light and the heavy phase are sucked into the mixing compartment by an impeller pump through the two horizontal inlet tubes and are mixed intensely to yield an optimum mass transfer. The mixture is forced into the rotating bowl passing an anti-vortex baffle and steadying plates at the center of the axle. In the narrow, nozzle type inlet aperture the mixture is fed from the static mixing chamber into the rotating settling chamber (rotor) converting pressure into kinetic energy. The proper functioning of a stage depends on the correct choice of the free cross section of the nozzle for the respective speed and overall throughput.

A baffle plate or diversion baffle in the rotor on the mixer shaft radially diverts the entering mixture to the outside where it is subjected to the centrifugal field (about 400 g) over the entire length of the rotor and finally disengaged.

Separated by conveniently shaped circular weirs the two clean phases leave the rotor through radial bores at its top into collection chambers and further into the subsequent extractor stages via tangential outlet tubes.

The rotor shaft is supported by a plug and coupled to the motor which is located outside the radiation shield. The rotor must be balanced very carefully as the contactor has no bearing below the shielding. In the liquid stream there is thus no mechanically sensitive component which would require maintenance.

The extended motor shaft has an easily exchangeable rotary seal. Compressed air (0 - 300 mm Hg) is fed through the seal and the hollow motor and rotor shafts to the circular weir of the heavy phase to control the position of the interface so that both phases are completely disengaged 3).

The motor can easily be replaced. A special design feature allows also the removal of motor, plug, shaft, rotor and impeller as a unit for replacement.

4 Laboratory Tests

Hydraulic properties and the extraction efficiency of the centrifugal contactors were investigated using a 12-stage battery. Fig. 4 shows the stages arranged in a rectangle.

Characteristic data of a prototype contactor are summarized in Table 1. The weir dimensions were designed specially for the Purex system; however, they can be calculated for any other solvent system as well 4).

Hydraulic Capacity

The maximum total throughput of the centrifugal contactor depends on the

- size of the contactor
- mass flow ratio of aqueous and organic phase
- speed of mixer and rotor
- density ratio of the phases
- viscosity, temperature, and emulsibility of the phases

a) Without Interface Control

Fig. 5 shows the dependence of the maximum throughput on the mass flow ratio q_a/q_o at various impeller speeds and two different density ratios for a given degree of mutual entrainment of the two liquid phases (0,5 and 1 % resp.). The highest obtainable throughput (organic plus aqueous phase) was 600 l/h using the system 30 % TBP/Shellsol T - 1 M HNO_3 and a flow ratio of 1/1.

b) With Interface Control

Interface Control by means of compressed air requires an additional circular weir and a sealing baffle to prevent the escape of air through the aqueous outlet (Fig. 6).

The pressure range for the control air depends on the density of the aqueous phase, the rotor speed and the liquid head (r_2 - r_a). In the case of an air failure both phases leave together through the aqueous port into the collection chamber.

The maximum throughput as a function of the mass flow ratio for the system 15 % TBP/Shellsol T - 0.1 M HNO_3/ 1 M $NaNO_3$ is plotted in Fig. 7. The throughput curve holds for a constant rotor speed of 3.000 rpm and an optimum air control pressure p_a, i.e. that pressure at which the aqueous and the organic phase have a tolerated maximum of 1 % impurities. The maximum effective range of pressure control, $p_{h\ eff}$, was 266 mm Hg.

The maximum total throughput in the case of interface control is about 50 % higher than without control. Moreover, interface control allows with one type of contactor the handling of liquid systems with density ratios between 0.75 and 0.95 as is the case in the extraction cycles of the Purex process.

Mass Transfer Efficiency

The mass transfer efficiencies of the prototype contactor were determined for countercurrent extraction and re-extraction under the conditions of the third cycle of the WAK.

a) Uranium Extraction (Three Stages)

The uranium distribution is shown in Fig. 8.
Aqueous feed: 0.198 M U/2.5 M HNO_3
Organic feed: 30 Vol% TBP/Shellsol T
Slope of the operation line: 1.53
Contact time per stage : 14.1 sec.

After about six minutes steady state was established in the three stages with an overall throughput of 215 l/h.

b) Uranium Stripping (Six Stages)

The uranium distribution is plotted in a Mc Cabe-Thiele diagram (Fig. 9).
Aqueous feed: 0.22 M HNO_3
Organic feed: 30 Vol% TBP/Shellsol T - 0.325 M U
Slope of the operation line: 1.35
Contact time per stage : 15.1 sec.
Overall throughput : 200 l/h

Since the extraction was carried out at only about half of the maximum possible throughput, the contact time is relatively long. Steady state was established after about eight minutes.

Fig. 9 clearly indicates that the theoretical equilibrium was not obtained in the individual stages.
While the extraction yielded an overall efficiency (ratio of actual to theoretical number of stages) of nearly 100 %, only about 72 % were achieved in the stripping operation. This is possibly due to slow transfer kinetics. The stripping temperature was 22 °C compared to 50 - 60 °C usually applied in plant operation.

5 Plant Installation

The two centrifugal contactor batteries together with pumps and small receiver vessels are placed in a concrete cell (3 m x 3 m, 2.1 m height) with a wall thickness of 0.5 m (Fig.10). The separation from other equipment and active areas makes the centrifugal contactors accessible and maintenance operations are conveniently done. The shielding efficiency would have to be raised by a factor of 10^4 for processing highly active solutions.

The product solution of the second cycle is collected in a pair of feed adjustment vessels and fed by air-lift to the first contactor. The TBP-solvent is recycled by canned motor pumps without intermediate cleaning.

All process vessels of the third cycle have critically safe dimensions with respect to 3 % U-235 fuel. The transfer of waste solutions to critically non-safe plant sections is controlled by an in-line uranium monitor.

The overall cost of the installation of the third uranium cycle including adaption to the already existing plant installation will be approximately $400.000. The scheduled date for the start-up of the WAK plant will not be postponed by this additional program.

References:

1) W. Schüller, P. Zühlke, WAK plant for reprocessing, Nuclear Engineering, 13, 768-769 (1968)

2) D.S. Webster et al., DP-MS-67-71 (1967)

3) A.A. Kishbaugh, DP-841 (1963)

4) B.F. Roth, KFK-862 (April 1969)

Table 1 Characteristics of the Prototype of Centrifugal Contactor

rotor (diameter)	80 mm
rotor (length)	130 mm
r_{o*} (organic weir)	16 mm
r_{a*} (aqueous weir)	19 mm
r_{a*} (aqueous weir with air control)	26 mm
hold up, mixer	0.12 liters
hold up, settler	0.72 "
hold up, overall	0.84 "
centrifugal field	400 g
power requirement per stage	500 W
rotor speed	3000 rpm
material (SS)	DIN 14541

Fig. 1 - Schematic flow sheet of WAK extraction cycles

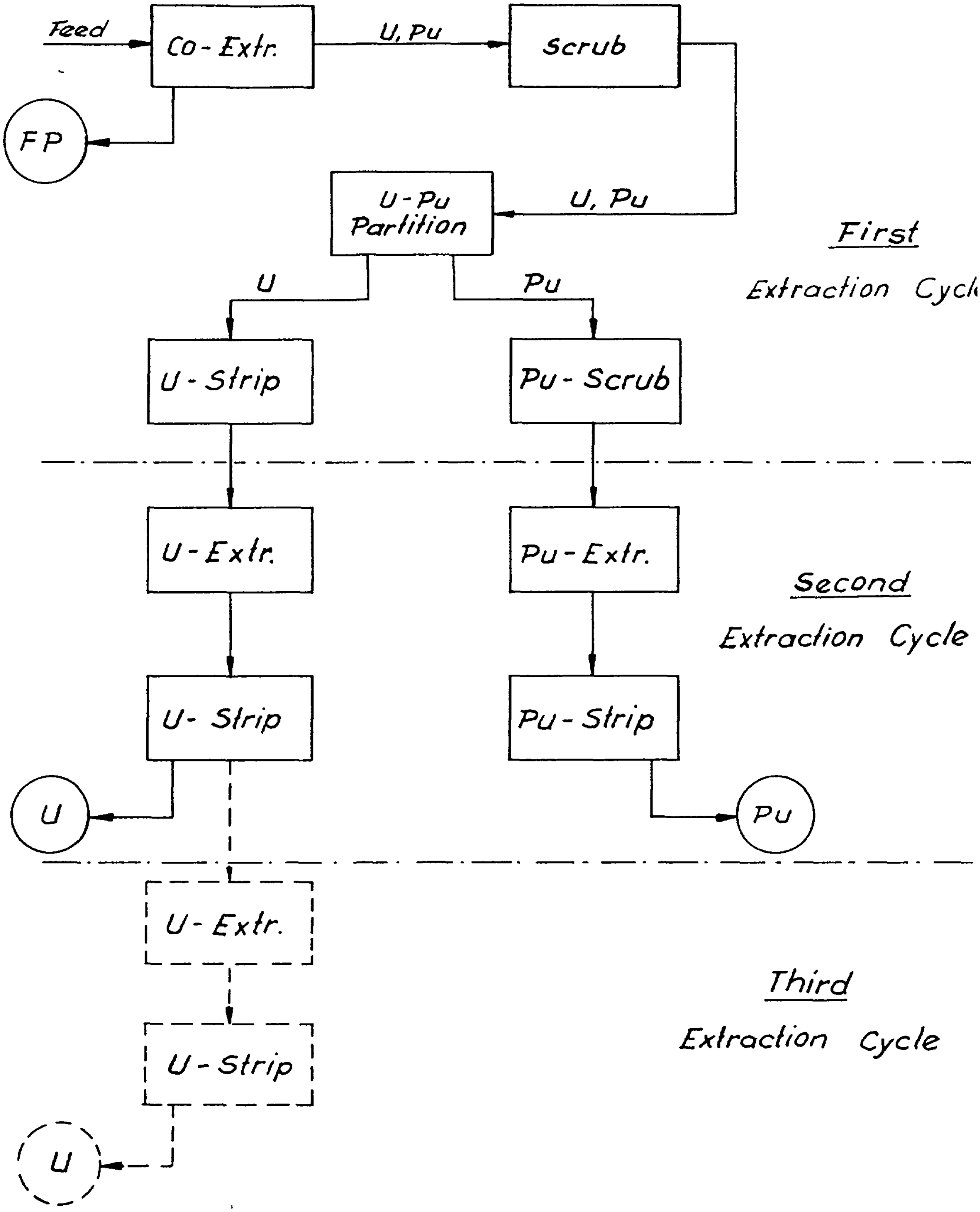

Fig. 2 - Third uranium extraction cycle with centrifugal extractor test batteries

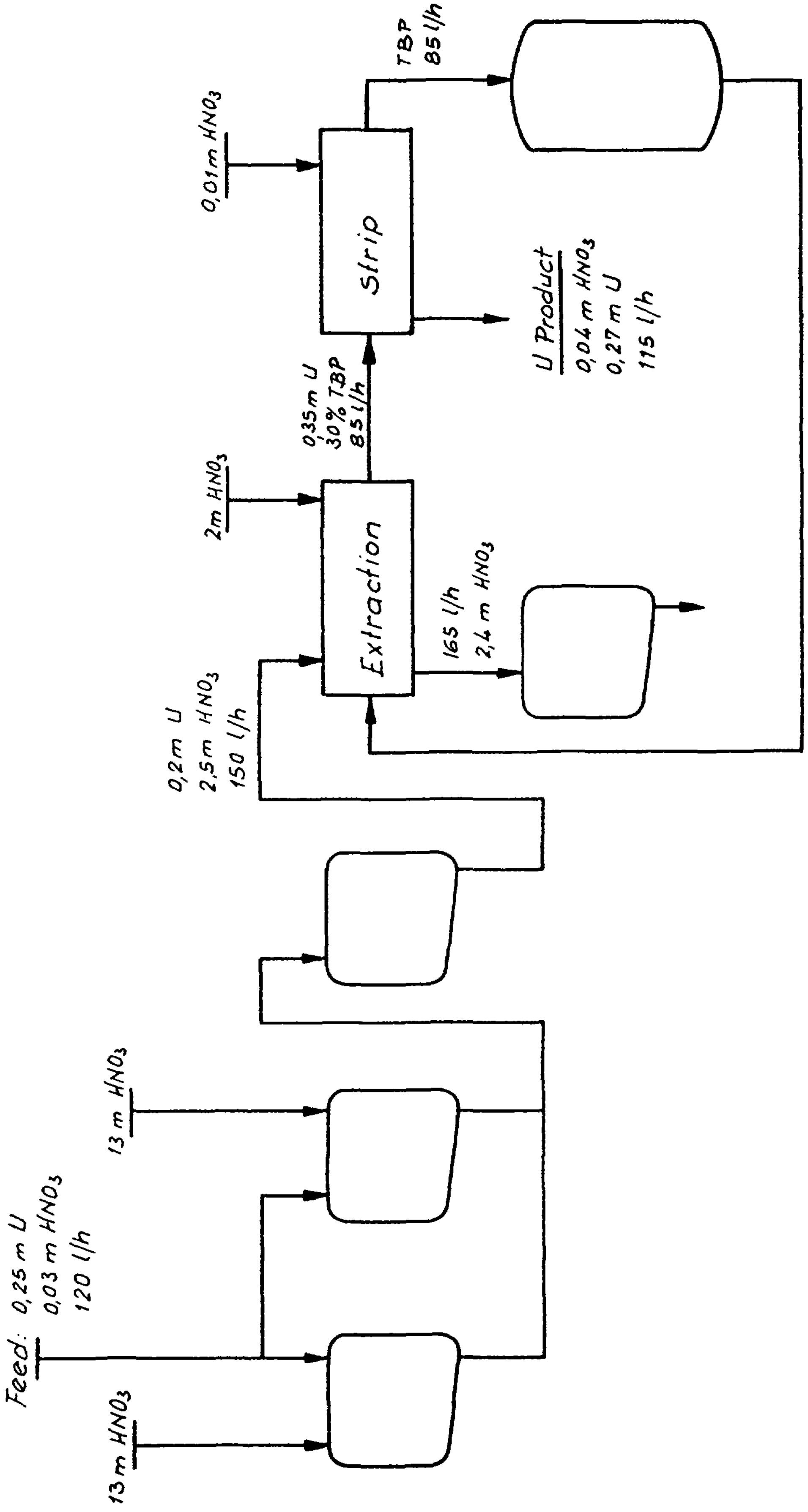

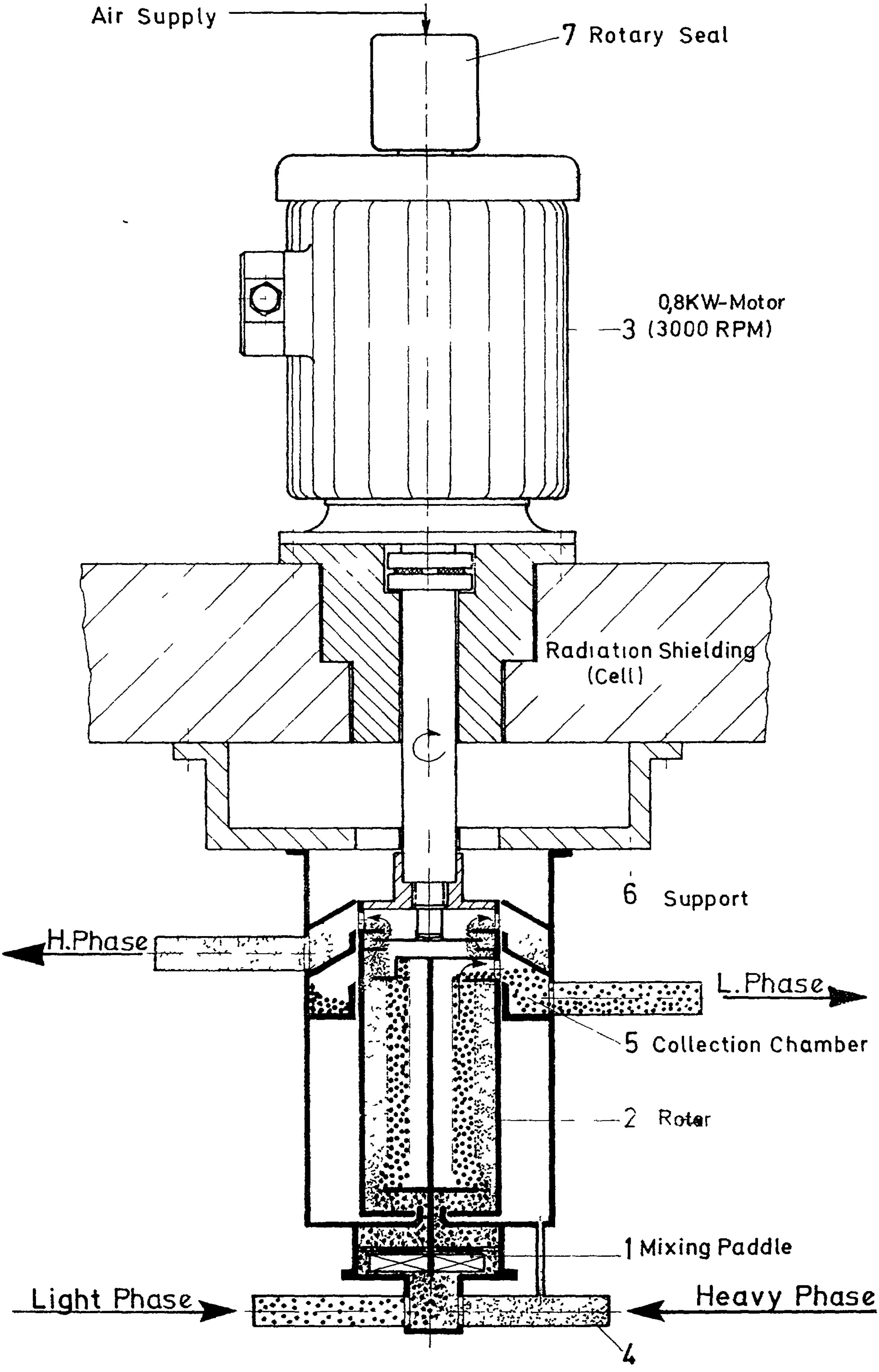

Fig. 3 - Centrifugal extractor stage

Fig. 4 - Centrifugal extractor model and Laboratory test battery

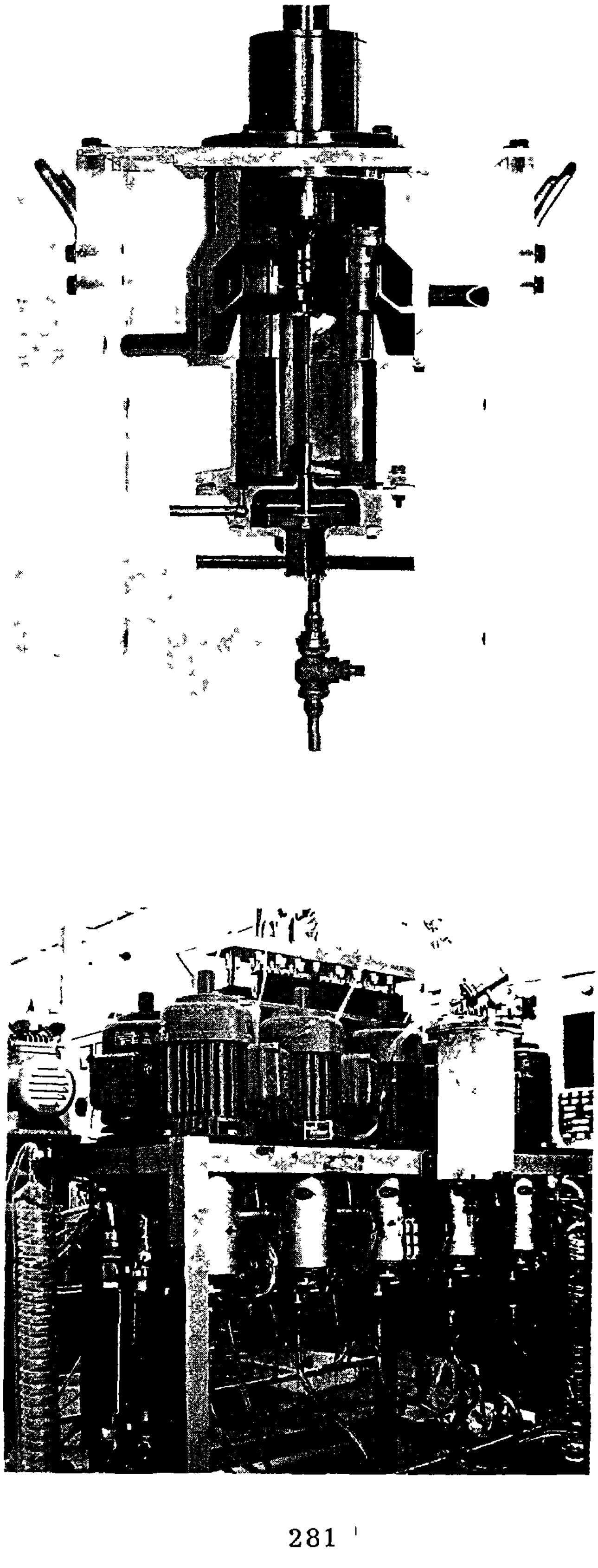

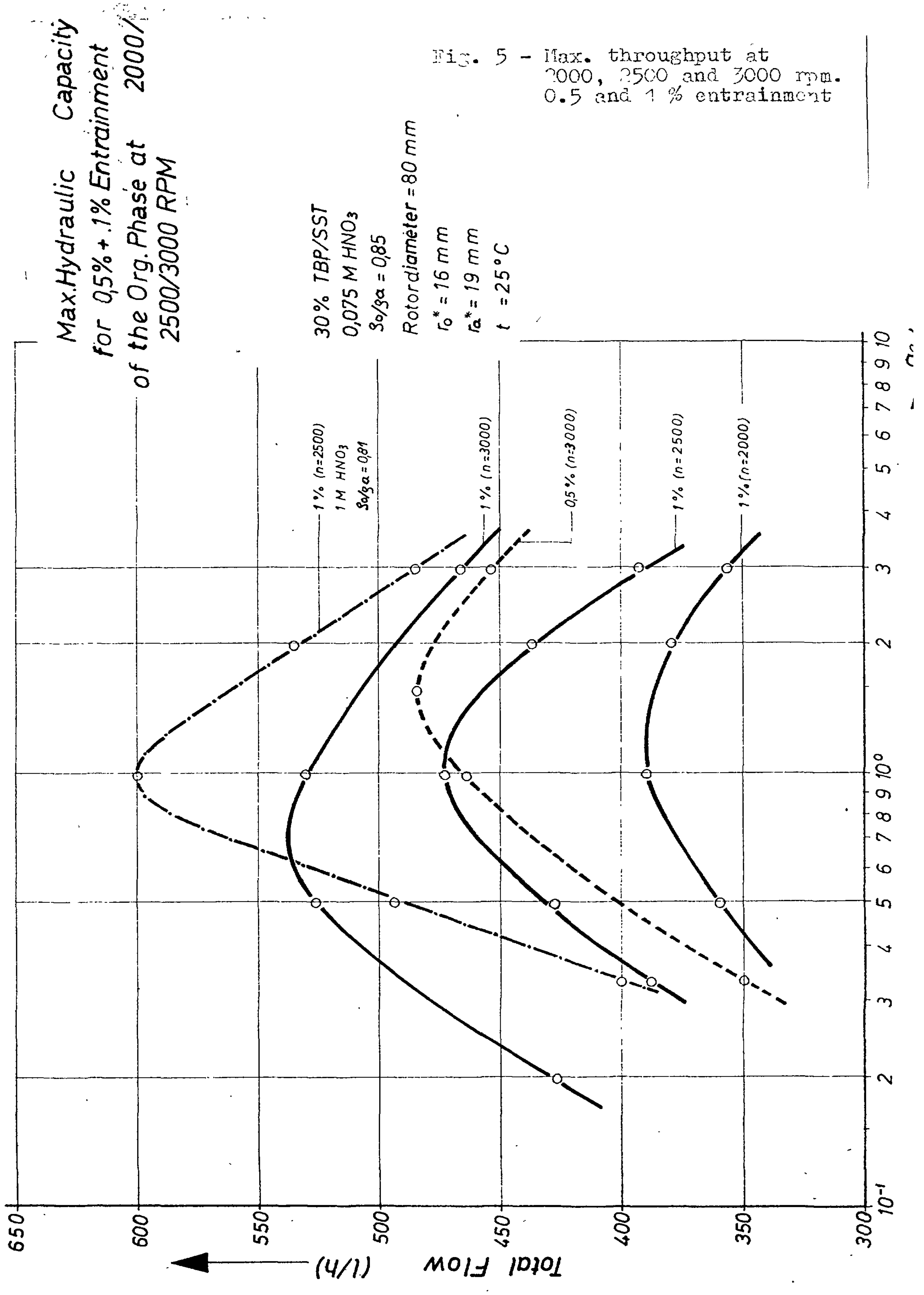

Fig. 5 - Max. throughput at 2000, 2500 and 3000 rpm. 0.5 and 1 % entrainment

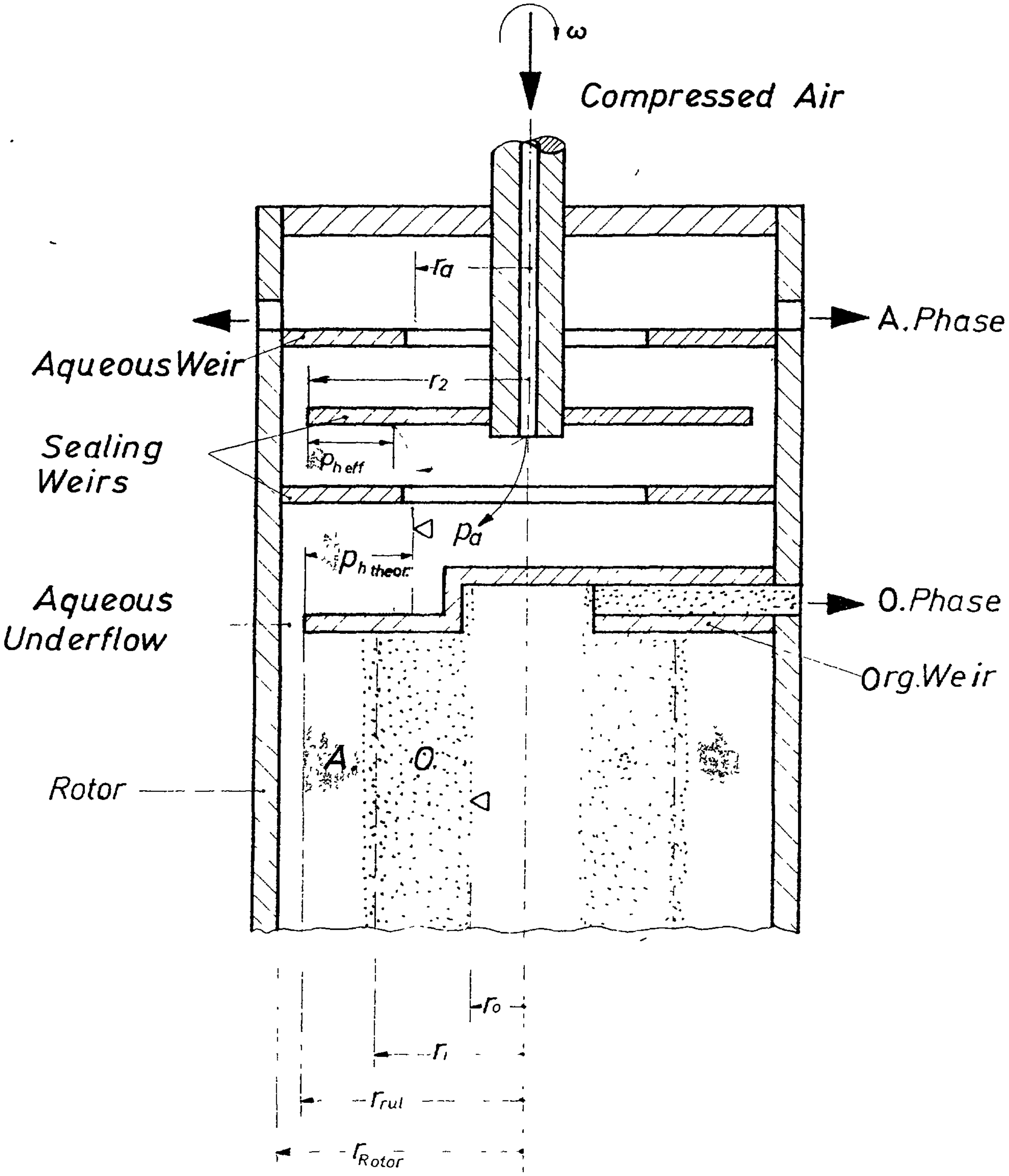

Fig. 6 - Interface control by air pressure

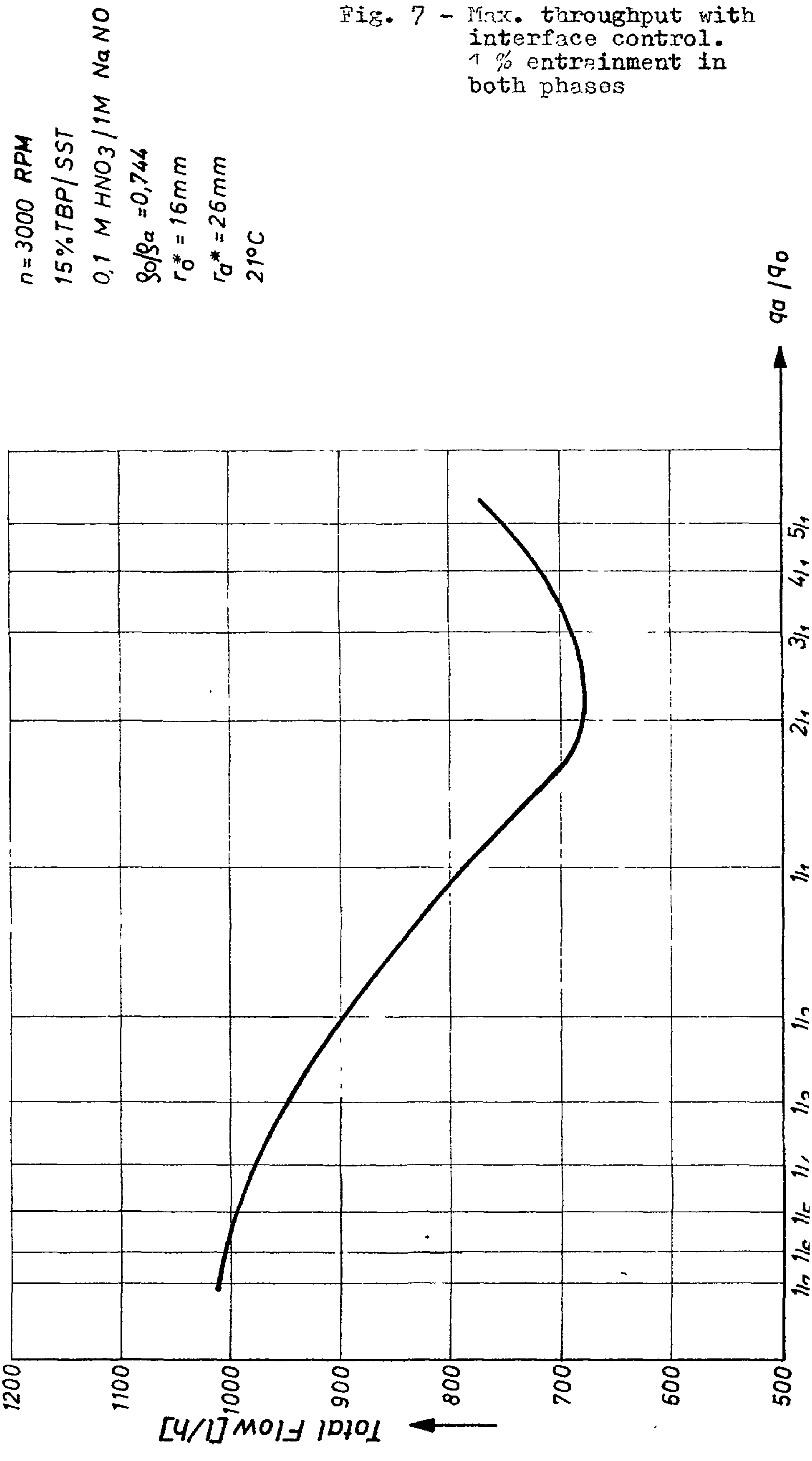

Fig. 7 - Max. throughput with interface control. 1 % entrainment in both phases

$2{,}5\ M\ HNO_3/0.198\ M\ U$

Fig. 8 - Uranium extraction operating diagram

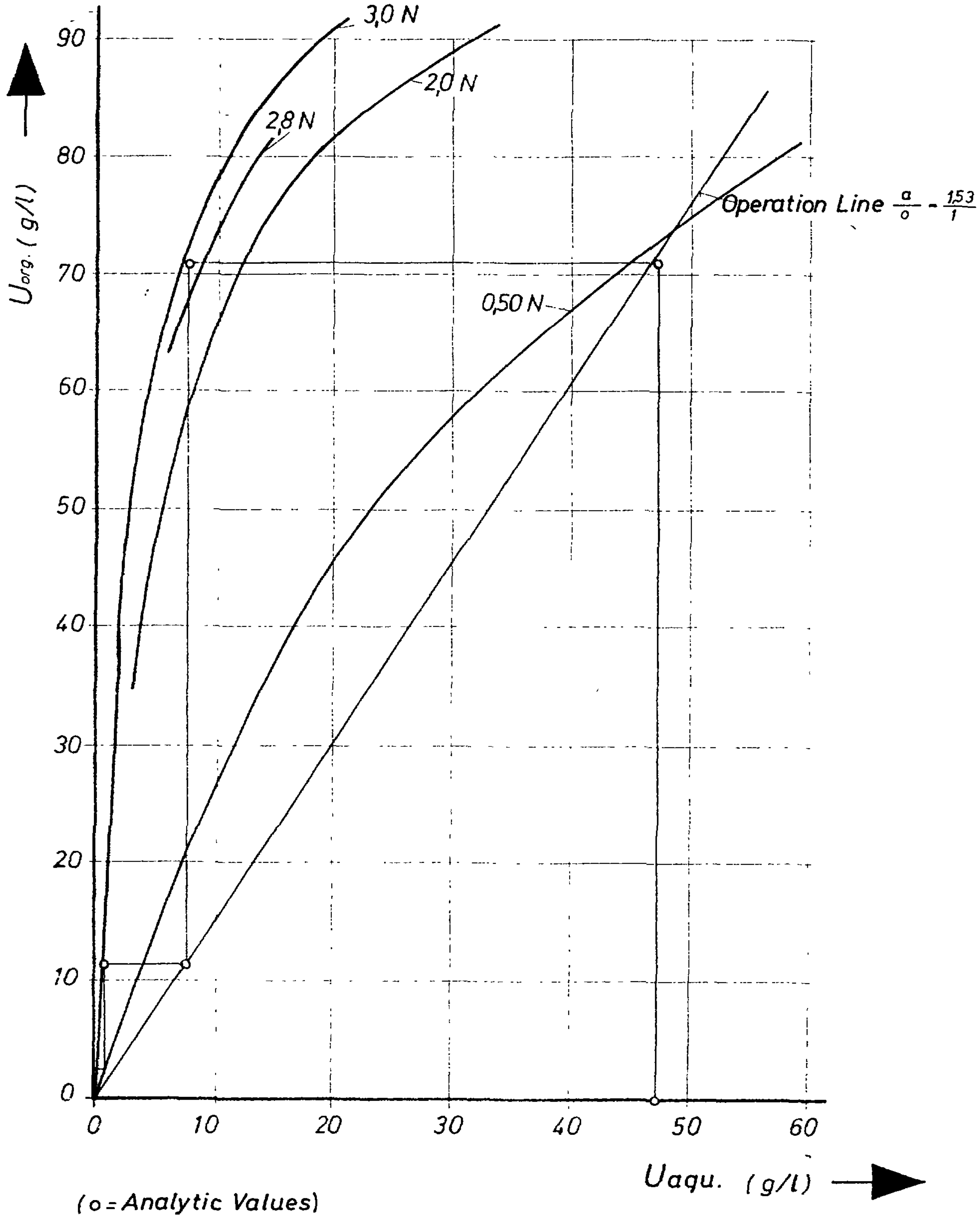

Fig. 9 - Uranium stripping operating diagram

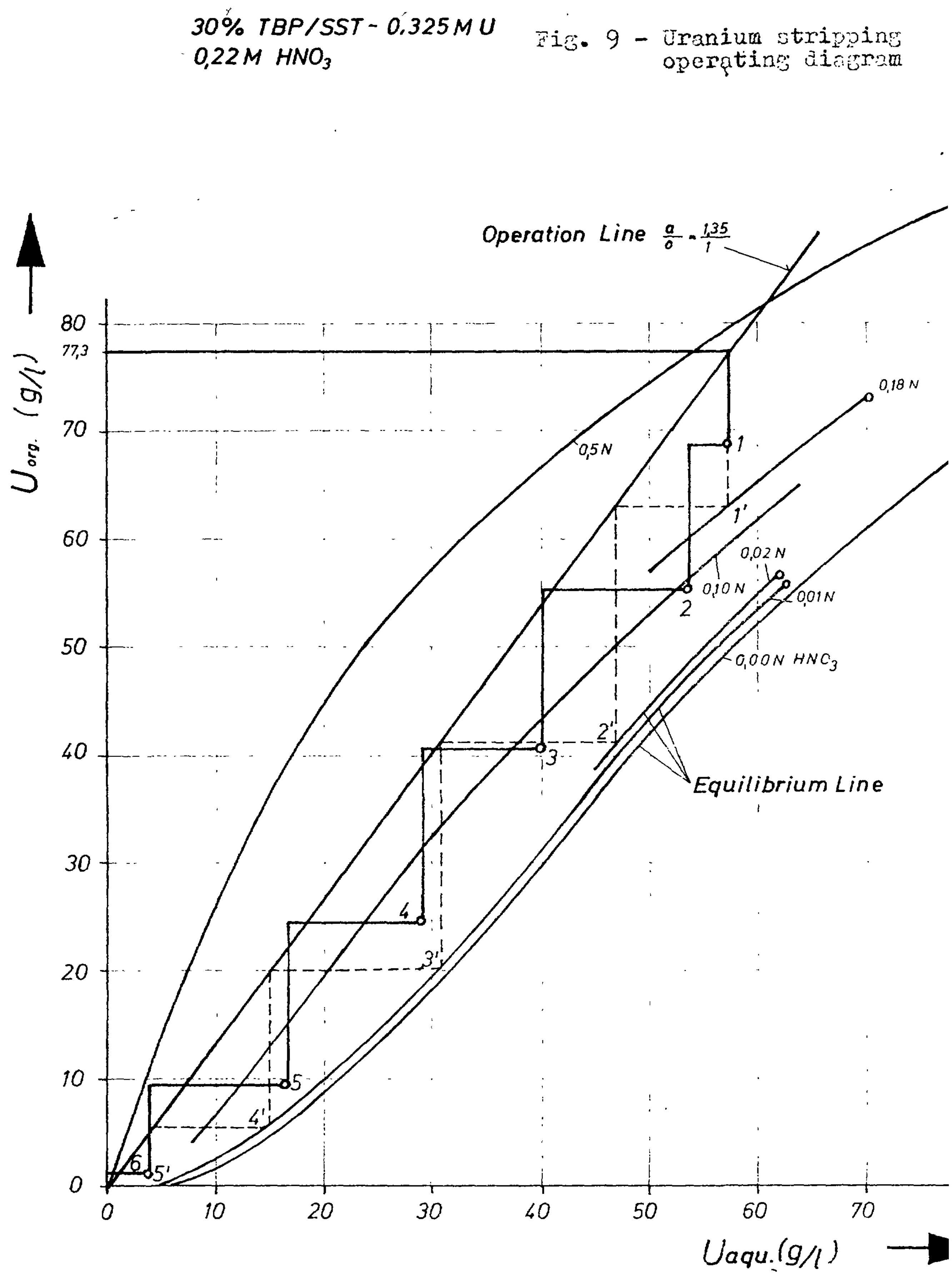

(o = Analytic Values)

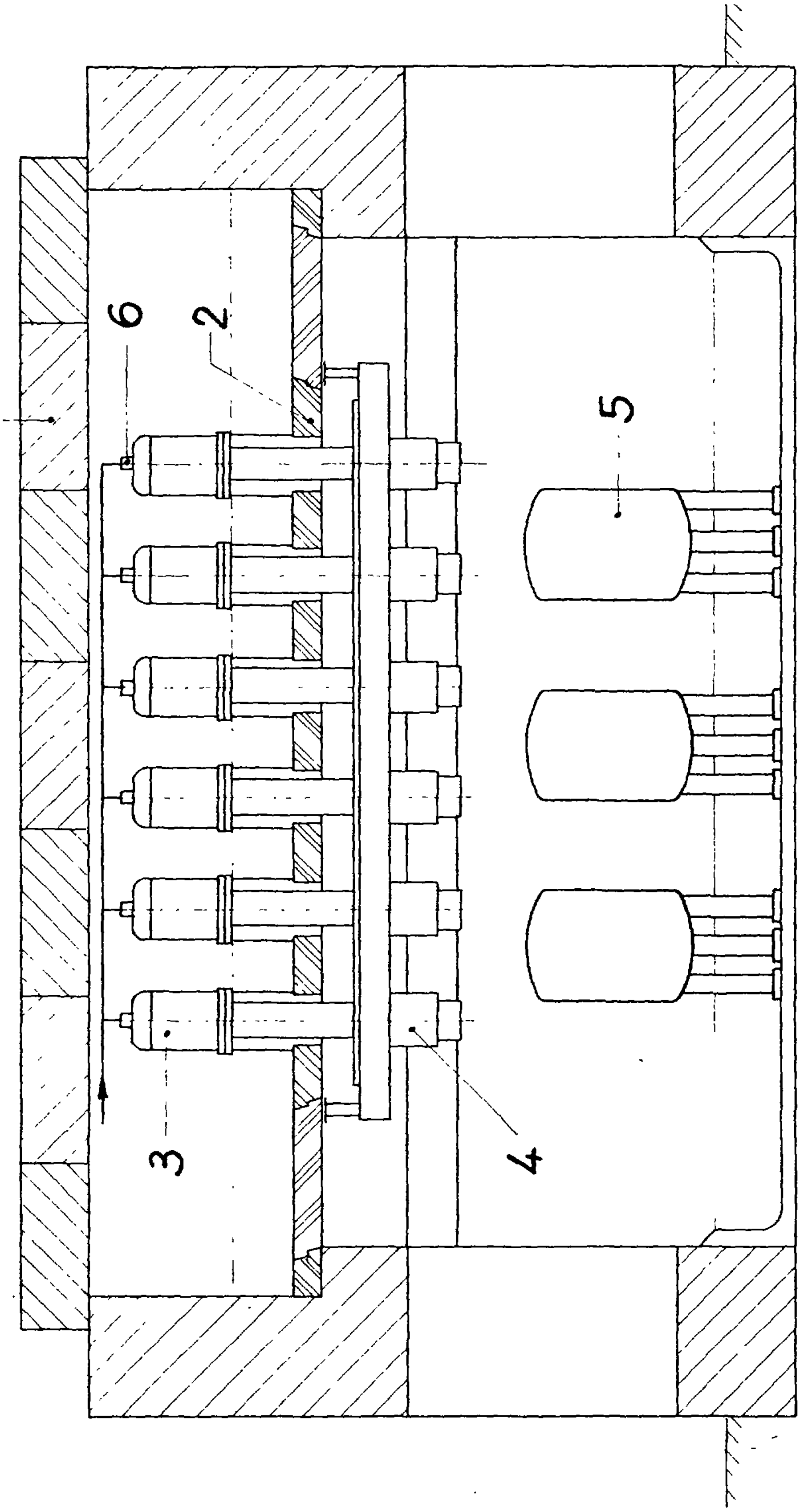

Fig. 10 - Sectional view of cell with centrifugal extraction battery.
(1) Removable shielding, (2) steel shielding, (3) motor, (4) extractor, (5) recipient.

Flowsheet Studies on Processing of Plutonium Fuels by Solvent Extraction

By G. Koch, W. Ochsenfeld, and E. Schwind
Kernforschungszentrum Karlsruhe (Germany),
Institut für Heisse Chemie

Abstract

Nuclear fuels containing plutonium as the fissile material are considered for use in fast breeder as well as in thermal "plutonium recycle" reactors. A number of solvent extraction flowsheets for the processing of such fuels has been studied. For the reprocessing of irradiated fast breeder reactor fuels, studies on plutonium behaviour in first-cycle coextraction (HA contactor) and on partitioning by uranium(IV) reduction (1 B contactor) were done using 20 vol.% TBP as the extractant. The interdependence of uranium (VI) and plutonium (IV) distribution coefficients at macro concentrations has been studied, and empirical functions have been developed which allow for the numerical calculation of distribution coefficients in the system TBP-n-dodecane-$Pu(NO_3)_4$ - $UO_2(NO_3)_2$-HNO_3-H_2O. A process for the partitioning of uranium and plutonium in Purex-type systems by the direct electrolytic reduction of plutonium in the above two-phase system has been worked out, and has successfully been demonstrated in laboratory counter-current runs. For the recovery of plutonium from non-irradiated fuel fabrication scrap, a process using 15 vol.% TLA/CCl_4 has been developed.

One of the problems arising in the processing of power reactor fuels lies in the fact that plutonium is considered as the fissile material in a number of advanced reactor designs. In particular, fast breeder reactors (with plutonium enrichments of about 15 - 20 % in the original core and of the order of 5 % in a final core-plus-blanket mixture) and thermal plutonium-recycle reactors (with original plutonium enrichments of the order of 1 - 3 %) will provide fuels with rather high plutonium concentrations. The chemical flowsheets used in the processing of these fuels must be adapted to this fact. A number of studies has been carried out in Karlsruhe, of which results on solvent extraction flowsheets are summarized in this report.

I. Reprocessing of Fast Breeder Reactor Fuels

Purex-type processes are usually used in modern reprocessing plants and will perhaps remain in use for a rather long period of time because of economic, reliability, and know-how reasons. The German reprocessing prototype plant WAK$^{1)}$, which is near to completion at Karlsruhe, will use a 30 vol.% TBP flowsheet to recover uranium and plutonium from slightly enriched uranium. A study made in the frame of a long-range development program commonly executed by Gesellschaft für Kernforschung (owner of WAK) and Gesellschaft zur Wiederaufarbeitung von Kernbrennstoffen (operator of WAK), led to the conclusion that adaptation of this plant to reprocessing of fast breeder fuel elements will be possible if, among other things, a common core-blanket management is done and a "dilute" extraction flowsheet is applied.

1. Interdependence of Uranium and Plutonium Distribution Coefficients

As a basis for flowsheet optimization, the distribution of uranium(VI) and plutonium(IV) between aqueous nitric acid and 20 vol.%

TBP/n-dodecane was studied for the single metals[2)] as well as for mixtures of the two metals[3)]. The dependence of the distribution of plutonium on the organic uranium loading at a total nitric acid concentration of 3.25 M is presented in fig. 1, while fig. 2 shows the distribution of uranium as a function of the organic plutonium loading for the same system. Empirical functions were derived from such data which allow for the calculation of the distribution coefficients in these multicomponent systems. In order to do this, the apparent equilibrium constants K_{app} of the equilibria

$$(1)\quad M^{m+} + mNO_3^- + n\,TBP \rightleftharpoons M(NO_3)_m(TBP)_n$$

$$(2)\quad K_{app}(M^{m+}) = \frac{(M(NO_3)_m(TBP)_n)}{(M^{m+})\ (NO_3^-)^m\ (TBP)^n}$$

where ( ) = concentration,
M^{m+} = UO_2^{2+}, Pu^{4+}, or H^+

were expressed as functions of the total ionic strength J of the aqueous phase:

$$(3)\quad K_{app}(Pu^{4+}) = 12.163 - 9.033\,J + 2.230\,J^2 - 0.163\,J^3$$

$$(4)\quad K_{app}(UO_2^{2+}) = 8.791 + 6.071\,J - 6.176\,J^2 + 1.579\,J^3$$

while a similar expression (equ. 5) from Jury and Whatley[4)] was used for the extraction of nitric acid.

$$(5)\quad K_{app}(H^+) = 0.385 - 0.155\,J + 0.024\,J^2$$

These equations are valid in the concentration ranges 20 - 30 vol.% TBP, 0.1-0.6 M U(VI), 0.01 - 0.2 M Pu(IV), and 0.6-3 M HNO_3.

Finally, the distribution coefficients of the different components can then be expressed in terms of the concentrations and of the apparant equilibrium constants of all the components of the system. Work is now under way to develop a computer program for the calculation and optimization of counter-current flowsheets.

2. Counter-Current Studies of the HA Contactor

It is a well-known fact that extraction of plutonium nitrate by TBP is lower than that of uranyl nitrate. In other words, plutonium is more easily displaced from the organic phase by uranium than vice versa (cf. figs. 1 and 2). If a high metal loading of the organic phase is maintained, this effect will lead to an accumulation of the plutonium in the middle stages of the HA contactor due to excessive recycling. It is only after this plutonium accumulation has reached a sufficiently high value that the plutonium is finally "pushed" into the organic product solution. Such a "recycle" flowsheet[5,6)] is shown in fig. 3. If the loading of the organic phase is lowered, the plutonium accumulation becomes less important, as is shown in the "coextraction" flowsheet of fig. 4[5,6)]. High loading of the organic phase is desirable since this leads to good decontamination of the plutonium and uranium from fission products. On the other hand, it is obvious from fig. 3 that such a "recycle" flowsheet cannot be used in existing plants with geometrically not safe equipment, since supercritical plutonium concentrations will build up in the middle part of the HA contactor. Nevertheless, such flowsheets might be considered if separate fast breeder reprocessing plants using geometric criticality control would be built in the future. Even the "coextraction" flowsheet of fig. 4 is not fully concentration safe, so that "dilute" flowsheets of the type shown in fig. 5[6)] may be chosen for existing plants.

3. Uranium-Plutonium Partitioning in the 1B Contactor Using Uranium(IV) as the Reductant

In the WAK[1)], the partitioning (1B) bank is included into the first extraction cycle. Uranium(IV) nitrate will be used to reduce plutonium to plutonium(III). A number of laboratory counter-current runs was performed[6)] in which the acidity, the excess of uranium(IV), the point of introducing the uranium(IV) solution (1BX), the flow ratios, and the residence time were varied. As an example, fig. 6 presents the results of a flowsheet with a maximum acidity of 1.7 M HNO_3; the organic phase (1BF) introduced into the 1B contactor was in this case identical with the organic product solution (HAP) of the "dilute" flowsheet run shown in fig. 5. The plutonium product (1BP) contained 1 % of uranium, corresponding to a decontamination factor of ca. 10^4. The plutonium content in the uranium product stream (1BU) was 0.04 % of the total plutonium which corresponds to a decontamination factor of ca. $5 \cdot 10^3$.

From a number of similar experiments, the following general conclusions could be drawn: A 3 - 4.5 fold excess of U(IV) was not sufficient to obtain plutonium losses of less than 0.2 % in the 1BU solution, while a 7 fold excess was sufficient, provided the acidity was below 2.4 M. A lowering of the residence time per stage from 4.7 min to 3.0 min did not make a difference. Splitting of the U(IV) into two streams - one introduced as usual with the 1BX solution in a middle stage of the mixer-settler and one introduced with the 1BXS solution at the uranium product exit stage - likewise did not give a major effect. As to be expected, uranium decontamination of the 1BP plutonium product stream was best with high-acidity flowsheets.

II. Direct Electrolytic Reduction of Plutonium in the 1B Contactor

Large amounts of reductant are required in the 1B contactor if fuels with a high plutonium content are processed. This will perhaps prevent the use of ferrous sulfamate in the reprocessing of, e.g., fast breeder reactor fuels, and is at least not convenient even if uranium(IV) nitrate is used as the reductant. Thus a study was carried out to develop a direct electrolytic in-line reduction of the plutonium in the mixed-phase system of the 1B contactor[7)].

One condition for such a process is that the Pu(IV)/(III) reduction rate is sufficiently high. In particular, the influence of the cathode potential applied and of the solution partners on the reduction rate was of interest. Nitric acid in concentrations of 0.3 - 1.5 M did not influence the reduction rate. Hydrazine, which would be added as a scavanger for nitrous acid, lowered the time necessary for quantitative reduction. The dependence of the reduction rate on the uranium(VI) concentration and on the cathode potential applied can be seen from fig. 7 which presents a potential - current diagram. In the potential range of the Pu(IV)/(III) limiting current, i.e. between ca. + 400 and -100 mV versus SCE, the reduction rate is proportional to the Pu(IV) concentration. If the reduction is carried out in the potential range of the U(VI)/(IV) stage, i.e. between ca. -100 and -500 mV versus SCE, uranium(IV) is formed in addition to the directly formed Pu(III). This U(IV) reduces, in its turn, immediately any Pu(IV) present, so that the total Pu(IV)/(III) reduction rate is raised by this "indirect" reduction via U(IV). This offers the possibility of regulating, by varying the potential applied, the reduction rate in a counter-current system.

Counter-current runs were carried out using a 16-stage plexiglass laboratory mixer-settler equipped with gold cathodes in 8 mixer chambers and platinized titanium anodes in the corresponding settler chambers. The organic uranium-plutonium feed solution (1BF) was introduced into stage No. 8, while the aqueous phase (1BX, nitric acid + hydrazine) was introduced into stage No. 1 and the organic scrub solution (1BS) into stage No. 16. Table 1 shows the flowsheet conditions of three runs, one of them (No.1) having a plutonium:uranium ratio typical of fast breeder fuels and two of them (No.2 and 3) having plutonium:uranium ratios typical of light-water reactor fuels. In runs No. 1 and 2, the anodes in the mixer-settler were shielded by clay diaphragms in order to prevent re-oxidation of the plutonium and any degradation of the solvent, while in run No. 3 the diaphragms were removed. The uranium-plutonium separations attained in these runs were equivalent to those experienced with uranium(IV) reduction. As an example, concentration profiles for run No. 2 are shown in fig. 8. Engineering studies are now under way for a pilot mixer-settler unit for plant use.

Table 1. Flowsheet conditions for three runs of an electrolytic 1B mixer-settler.

Run No.	1 BF	1 BU	1 BP
1	240 ml/h 4,5 g Pu/l 48,2 g U/l	350 ml/h 0,002 g Pu/l 38,0 g U/l	66 ml/h 21,2 g Pu/l <0,01 g U/l
2	480 ml/h 0,34 g Pu/l 77,0 g U/l	551 ml/h 0,004 g Pu/l 69,1 g U/l	44 ml/h 3,74 g Pu/l 0,01 g U/l
3	400 ml/h 0,5 g Pu/l 73,4 g U/l	471 ml/h <0,002 g Pu/l 61,5 g U/l	44 ml/h 3,4 g Pu/ 0,006 g U/l

III. Recovery of Plutonium from Non-Irradiated Fuel Fabrication Scrap

A process has been developed for the recovery of plutonium from the scrap which arises during the fabrication of power reactor fuels enriched in plutonium[8)]. Such fuels usually consist of a UO_2-PuO_2-mixture. Anion exchange is often used for recovery of the plutonium from this scrap. However, the capacity of the anion exchange resin for plutonium is lowered in the presence of uranium, which is of particular importance in the case of the low-enriched thermal plutonium-recycle fuels where uranium is present in a large excess. Thus a solvent extraction process was developed which, as a major requirement, was to use a non-inflammable solvent. A 15 vol.% trilaurylamine (TLA) solution in carbon tetrachloride was selected as the solvent, based on the good Pu(IV)/U(VI) separation factor of the TLA extractant and on the non-inflammabilit of the CCl_4 diluent.

After dissolution of the scrap, the aqueous feed solution is adjusted to ca. 2 M nitric acid. Valency adjustment of the plutonium to the +4 state is necessary if any Pu(VI) should have been formed during dissolution. Extraction isothermes for the extraction of plutonium(IV by 15 vol.% (ca. 0.24 M) TLA/CCl_4 from 2 M nitric acid as a function of the uranium concentration are shown in fig. 9, while fig.10 presents the extraction of uranium under the same conditions as a function of the plutonium concentration. It can be seen from these figures that the plutonium distribution coefficients and the plutonium-uranium separation factors remain high enough even at high uranium concentrations to guarantee a good separation of the two metals with a few counter-current stages.

It is a well-known fact that backwash of plutonium from organic tertiary amine phases offers some difficulties. In order to avoid contamination of the plutonium product by unwanted elements, backwash by solutions based on acetic acid was considered, which is however known to be a slow reaction (cf.[9]).

The kinetics of backwash of plutonium(IV) by 1 M acetic/0.05 M nitric acid from 15 vol.% TLA/CCl_4 is shown in curve 1 of fig. 11. Good recovery of plutonium may be possible even in a single-stage contactor provided that the residence time of the solutions is of the order of several minutes. Still better (lower) distribution coefficients and faster kinetics can be reached by the addition of ascorbic acid as a reductant for plutonium, as is demonstrated by curve 2 of fig.11. The latter solution was adopted for practical use.

On the basis of the above results, a counter-current flowsheet consisting of 6 extraction, 4 scrub, and 1 backwash stages was developed. A geometrically safe test facility using centrifugal contactors in extraction and scrub and a one-stage mixer-settler with long residence time for backwash is now under construction[10].

References

1. H. Tebbert, W. Schüller, and P. Zuchlke, Atomwirtschaft 12, 194 (1967).
2. W. Ochsenfeld, G. Baumgärtel, H. Schmieder, and E. Kuhn, German Report KFK-671 (1967).
3. G. Baumgärtel, W. Ochsenfeld, and H. Schmieder, German Report KFK-680 (1967).
4. S.H. Jury and M.E. Whatley, USAEC Report CF 59-8-122 (1959).
5. F. Baumgärtner, W. Ochsenfeld, B. Roth, and L. Finsterwalder, German Report KFK-652 (1967).
6. W. Ochsenfeld, H. Schmieder, and S. Theiss, German Report KFK-911 (under preparation).
7. E. Schwind and P. Schlosser, German Report KFK-895 (under preparation).
8. G. Koch, J. Schön, and G. Franz, KFK-893 (under preparation).
9. I.L. Jenkins, H.A.C. McKay, C.G.C. Shorthill, and A.G. Wain, AERE-4440, Pt. 2 (1965).
10. B. Roth and R. Beutner, unpublished.

Fig. 1. Plutonium (IV) extraction isothermes for various organic uranium loadings. 20 vol.% TBP/n-dodecane, 3.25 M total HNO_3, T = 25°C.

Fig. 2. Uranium (VI) extraction isothermes for various organic plutonium loadings. 20 vol.% TBP/n-dodecane, 3.25 M total HNO_3, T = 25°C.

Fig. 3. "Plutonium recycle" flowsheet with >90 % saturation of the organic phase.

Fig. 4. "Plutonium coextraction" flowsheet with ca. 80 % saturation of the organic phase.

Fig. 5. "Dilute" flowsheet with ca. 50 % saturation of the organic phase.

Fig. 6. Partitioning flowsheet, using as feed (1 BF) the organic product (HAP) of fig. 5.

Fig. 7. Potential- current diagram for the electrolytic reduction of Pu (IV) in the presence of uranyl nitrate.

Fig. 8. Concentration profiles for direct electrolytic reduction of plutonium in the 1 B mixer-settler, run No. 2 (cf. table 1).

Fig. 9. Extraction of tetravalent plutonium by 15 vol.% TLA/CCl_4 from 2 M HNO_3 as a function of the uranium concentration. T = 25°C.

Fig. 10. Extraction of hexavalent uranium by 15 vol.% TLA/CCl_4 from 2 M HNO_3 as a function of the plutonium concentration. T = 25°C.

Fig. 11. Kinetics of backwash of ca. 5 g/l plutonium (IV) from 15 vol.% TLA/CCl_4 (equilibrated with 2 M aqueous nitric acid). Curve 1: 2 M acetic/0.05 M nitric acid. Curve 2: 2 M acetic/0.05 M nitric/0.03 M ascorbic acid.

Fig.1

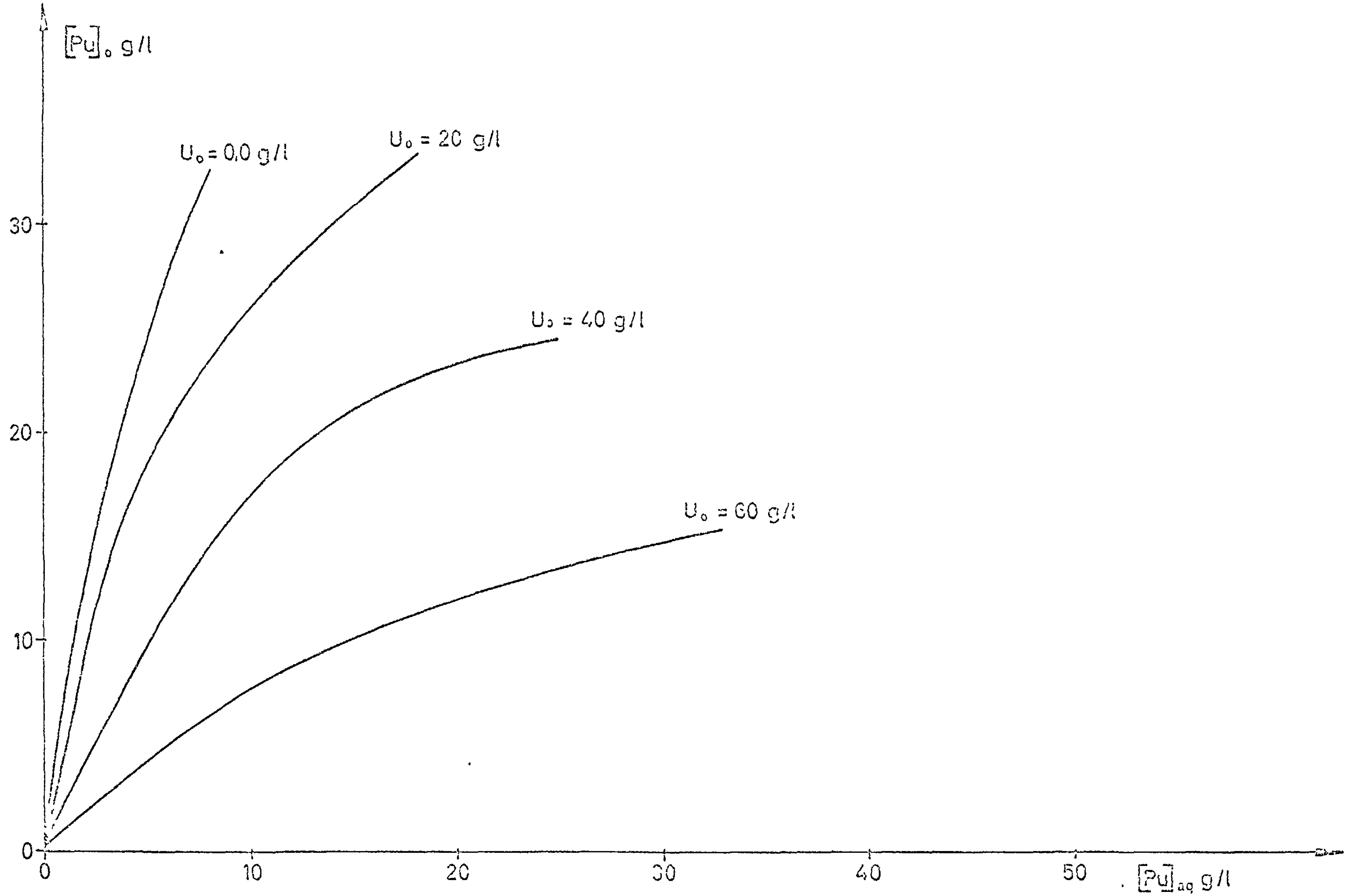
[Pu]$_o$ g/l
U$_o$ = 0,0 g/l
U$_o$ = 20 g/l
U$_o$ = 40 g/l
U$_o$ = 60 g/l
30
20
10
0
0
10
20
30
40
50
[Pu]$_{aq}$ g/l

Fig. 2

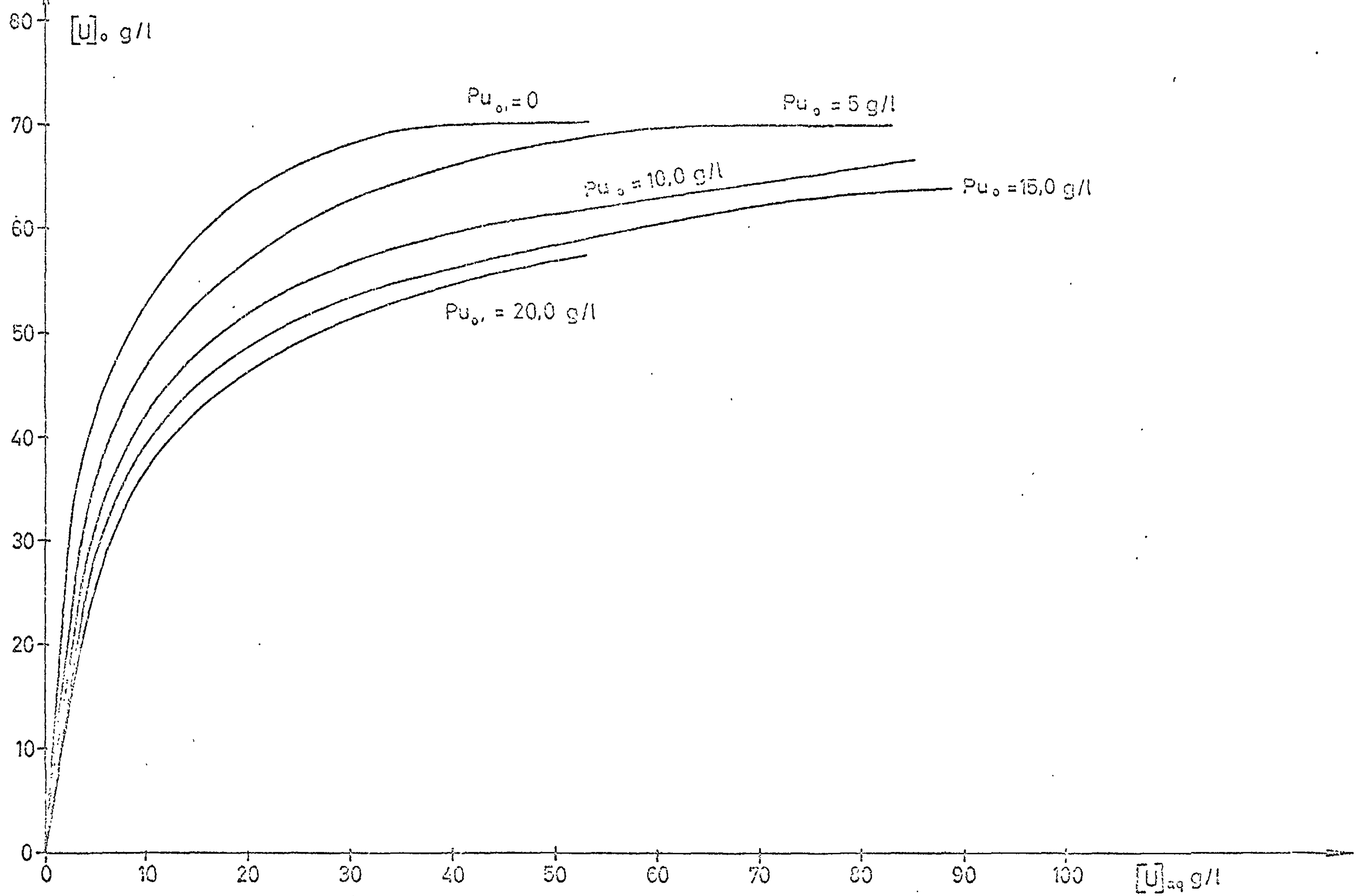
[U]o g/l
80
70
60
50
40
30
20
10
0
Puo = 0
Puo = 5 g/l
Puo = 10,0 g/l
Puo = 15,0 g/l
Puo = 20,0 g/l
0
10
20
30
40
50
60
70
80
90
100
[U]aq g/l

Fig. 3

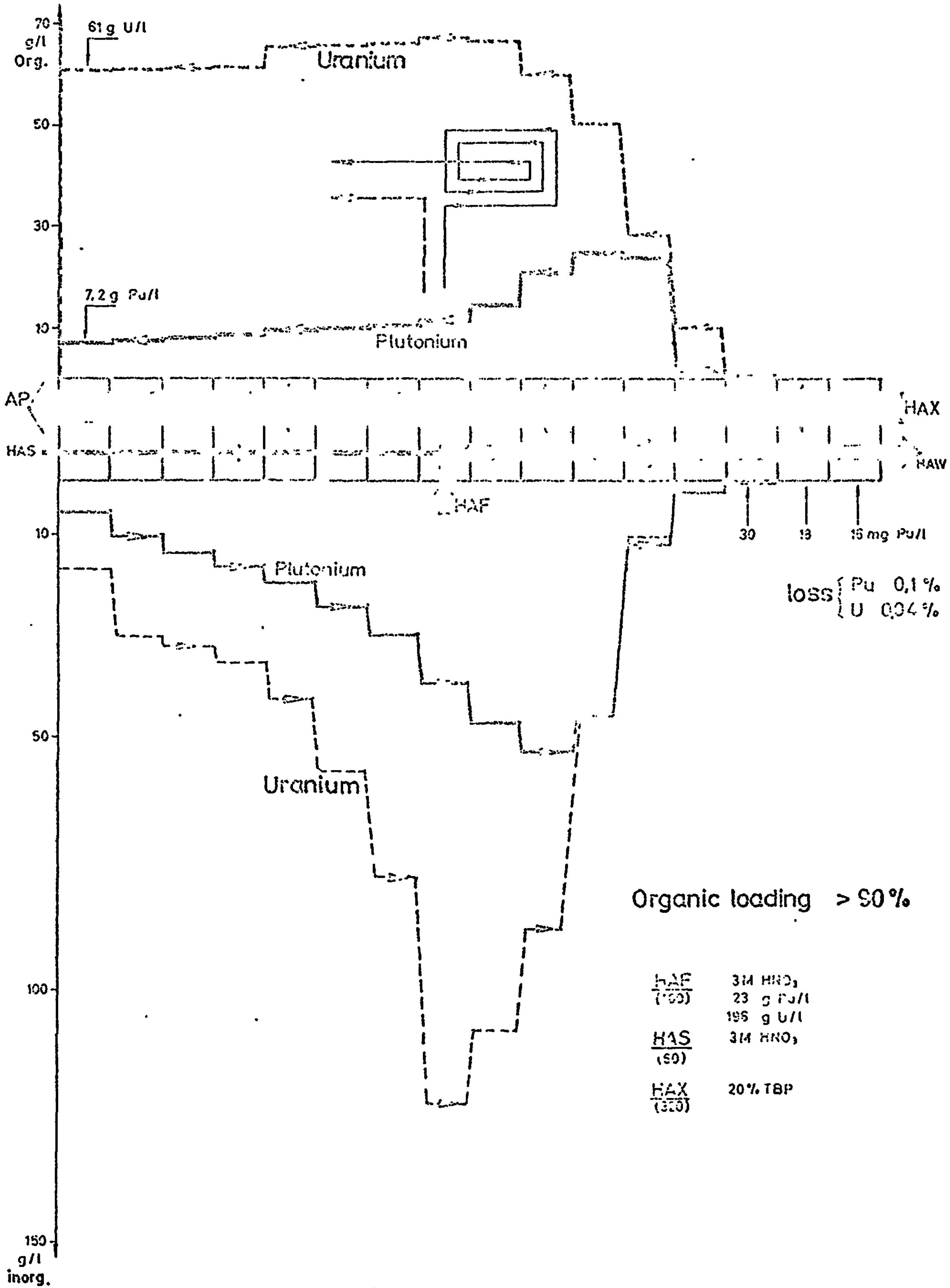
70
g/l
Org.
50
30
10
61 g U/l
Uranium
7.2 g Pu/l
Plutonium
AP
HAS
HAX
HAW
HAF
10
50
100
150
g/l
inorg.
30
19
15 mg Pu/l
loss { Pu 0,1 %
U 0,04 %
Plutonium
Uranium
Organic loading > 90 %
HAF (100) 3M HNO3
23 g Pu/l
196 g U/l
HAS (90) 3M HNO3
HAX (300) 20 % TBP

Fig. 4

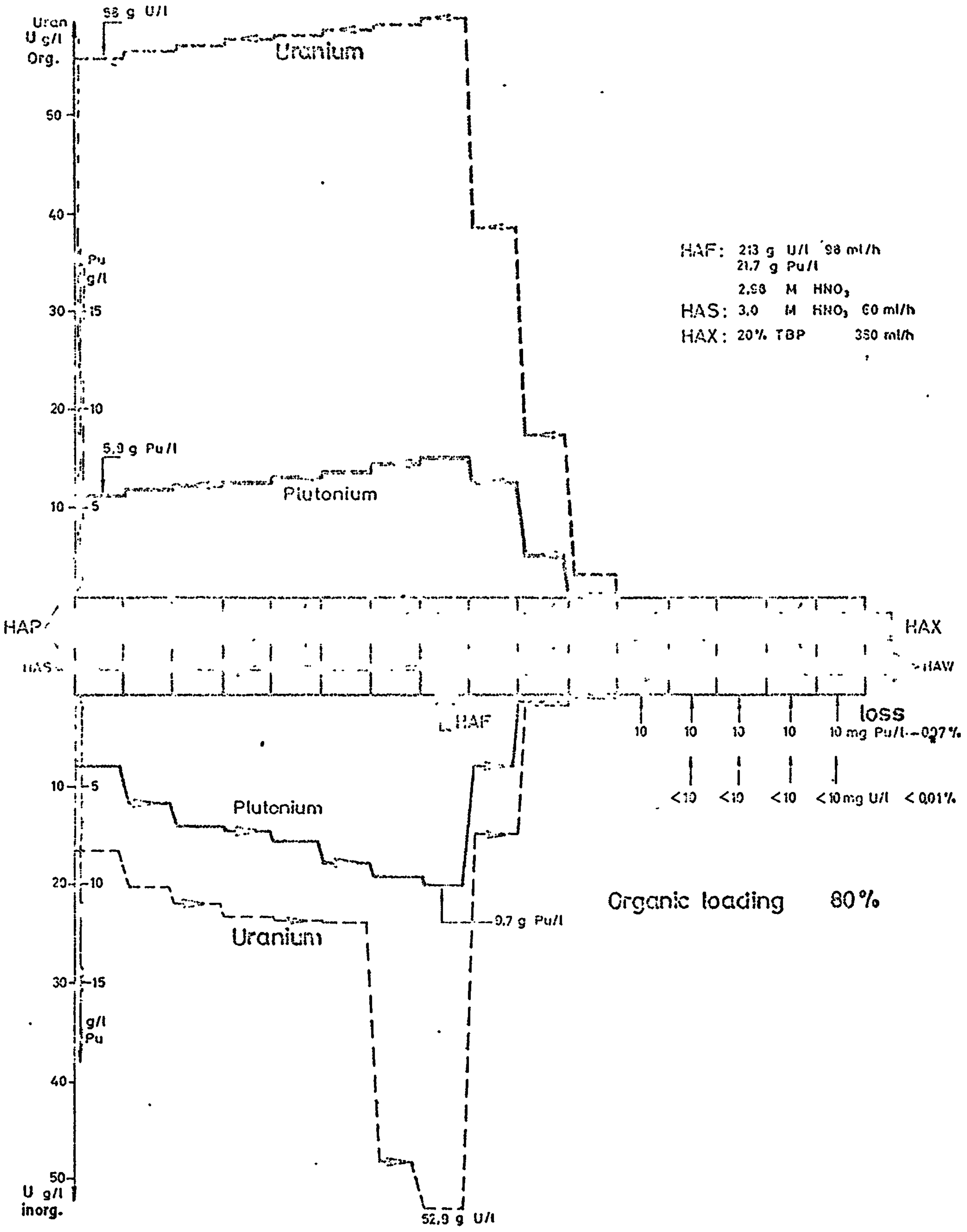
58 g U/l
Uran
U g/l
Org.
Uranium
50
40
Pu
g/l
30
15
20
10
5,9 g Pu/l
Plutonium
10
5
HAF: 213 g U/l 98 ml/h
21,7 g Pu/l
2,98 M HNO₃
HAS: 3,0 M HNO₃ 60 ml/h
HAX: 20% TBP 380 ml/h
HAP
HAS
HAX
HAW
HAF
loss
10
10
10
10
10 mg Pu/l -0,07%
<10
<10
<10
<10 mg U/l
< 0,01%
Plutonium
9,7 g Pu/l
Organic loading 80%
Uranium
52,9 g U/l
U g/l
inorg.
g/l
Pu

Fig. 5

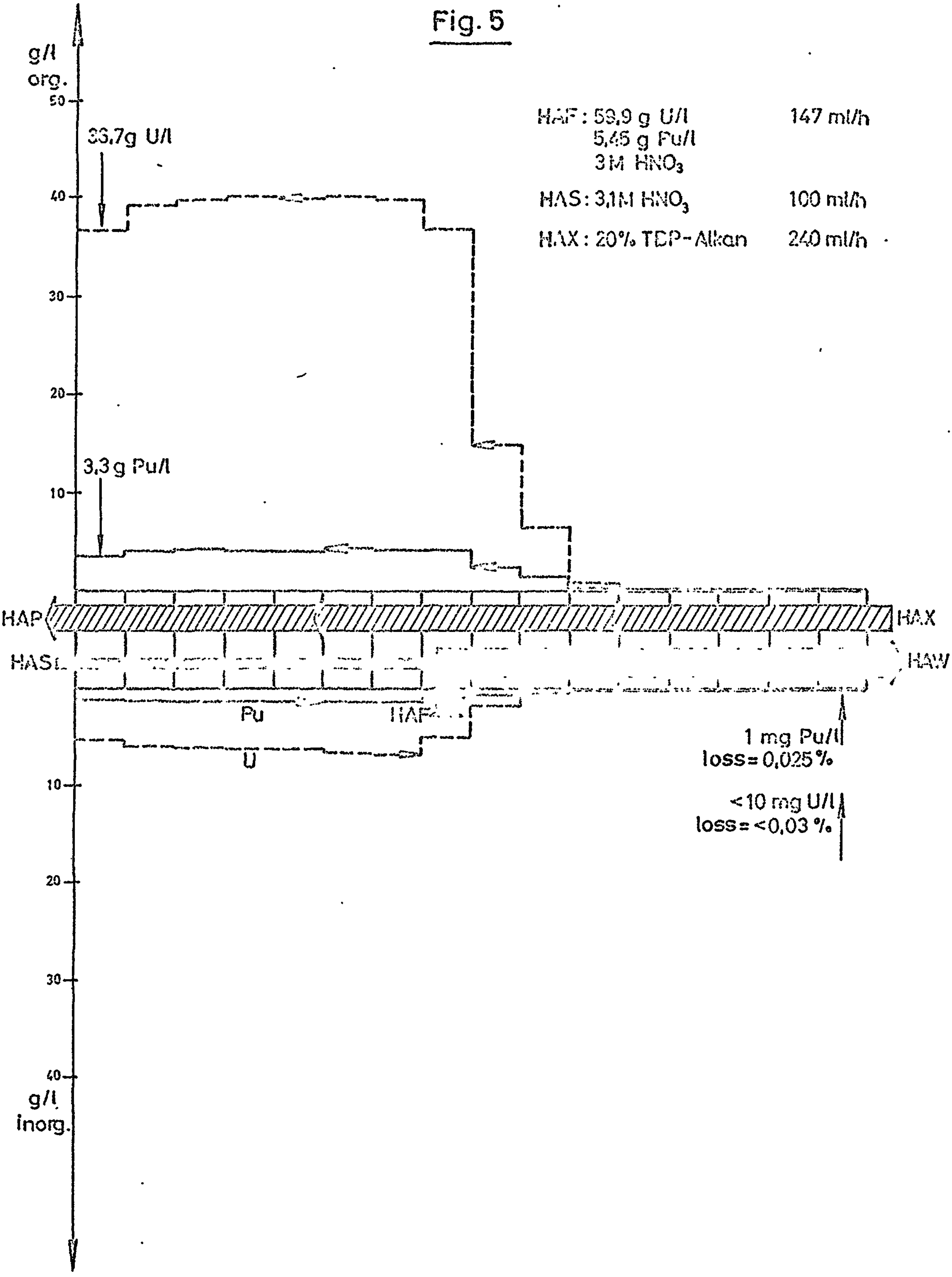
g/l
org.
50
40
30
20
10
36,7g U/l
3,3 g Pu/l
HAF : 59,9 g U/l 147 ml/h
5,45 g Pu/l
3 M HNO$_3$
HAS : 3,1M HNO$_3$ 100 ml/h
HAX : 20% TBP-Alkan 240 ml/h
HAP
HAX
HAS
HAW
Pu
HAF
U
1 mg Pu/l
loss= 0,025 %
<10 mg U/l
loss= <0,03 %
10
20
30
40
g/l
inorg.

Fig. 6

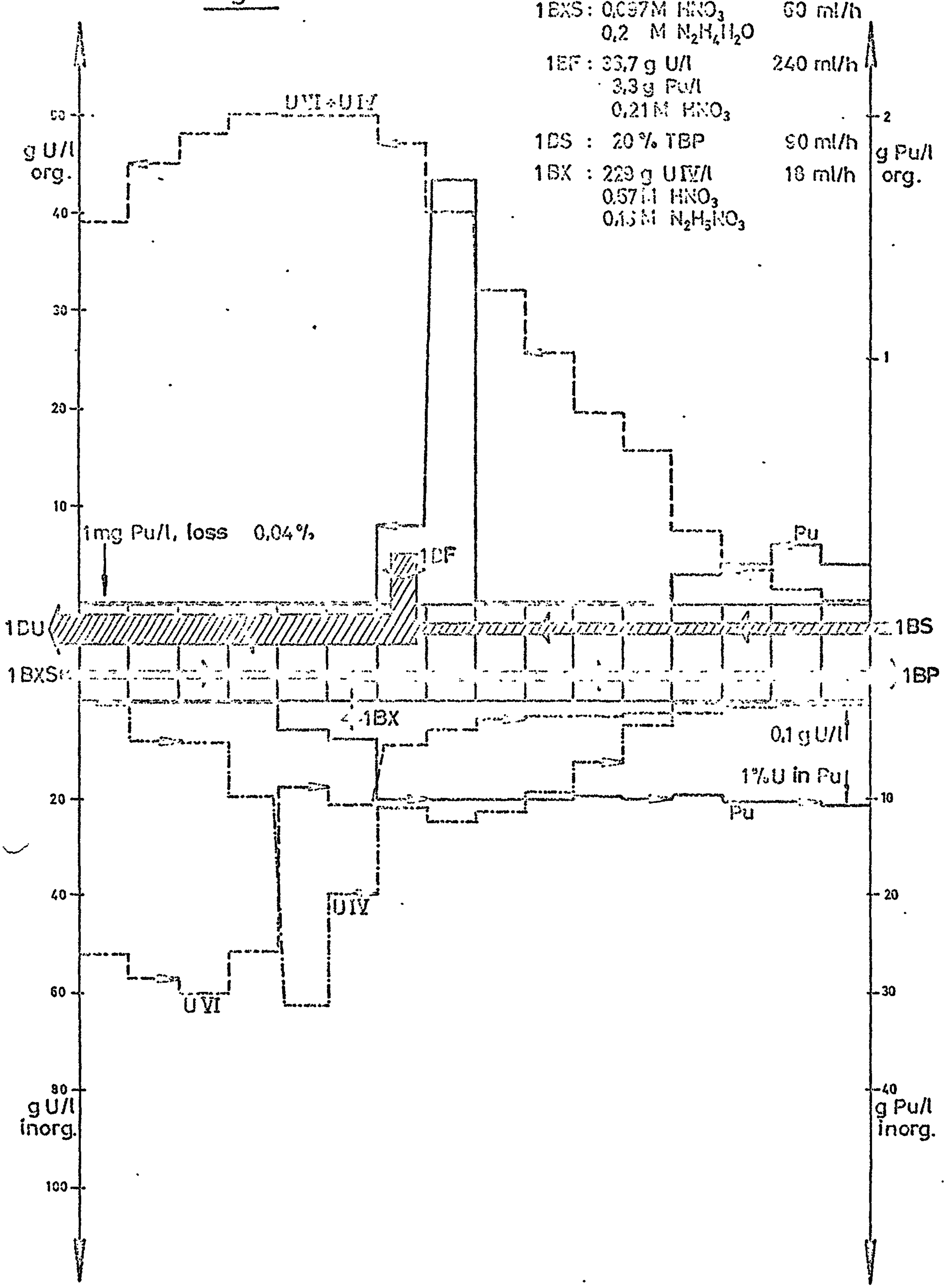
1BXS : 0,097M HNO_3 60 ml/h
0,2 M $N_2H_4H_2O$
1BF : 33,7 g U/l 240 ml/h
3,3 g Pu/l
0,21 M HNO_3
1BS : 20 % TBP 90 ml/h
1BX : 229 g UIV/l 18 ml/h
0,57 M HNO_3
0,15 M $N_2H_5NO_3$
UVI + UIV
g U/l org.
g Pu/l org.
50
40
30
20
10
2
1
1mg Pu/l, loss 0,04%
1BF
Pu
1BU
1BS
1BXS
1BP
1BX
0,1 g U/l
1% U in Pu
Pu
UIV
UVI
20
40
60
80
100
10
20
30
40
g U/l inorg.
g Pu/l inorg.

Fig. 7

Potential-current curve of a solution of $0{,}08\ M\ Pu(IV)\ 0{,}1\ M\ U(VI)\ 0{,}4\ M\ HNO_3\ \ 0{,}01\ M\ N_2H_5OH$ at the gold cathode

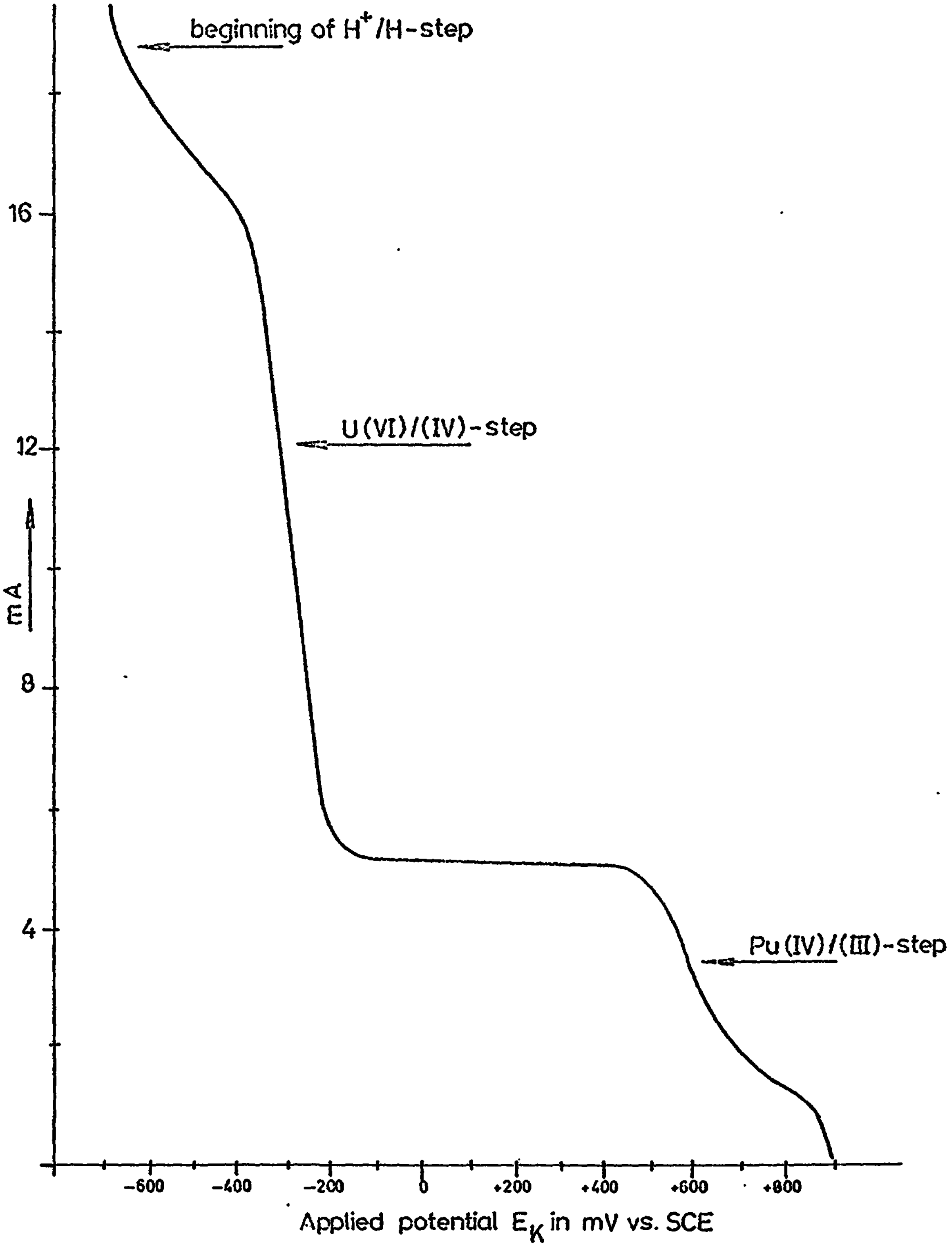

Fig.8

Process 2

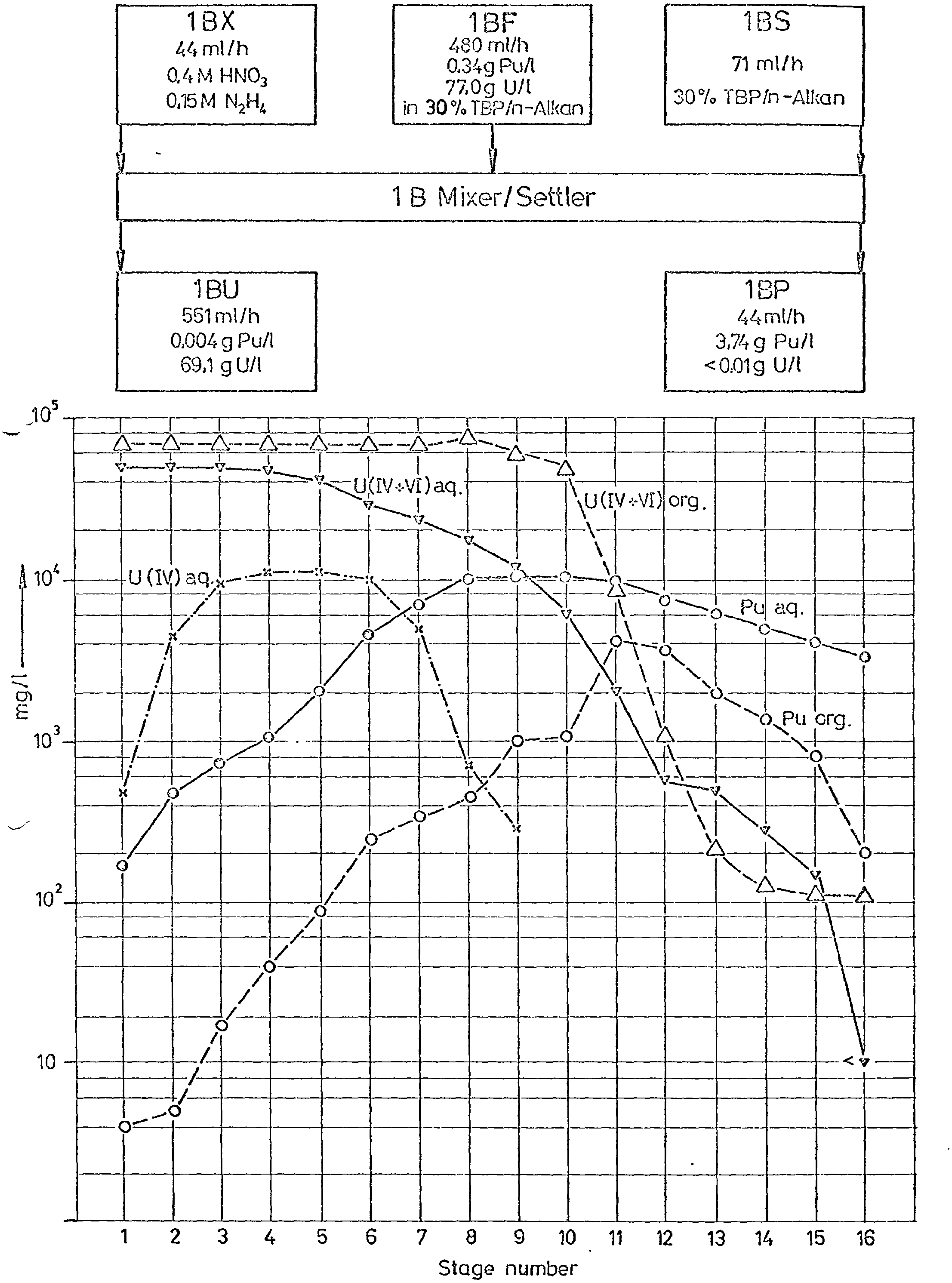

Fig. 9

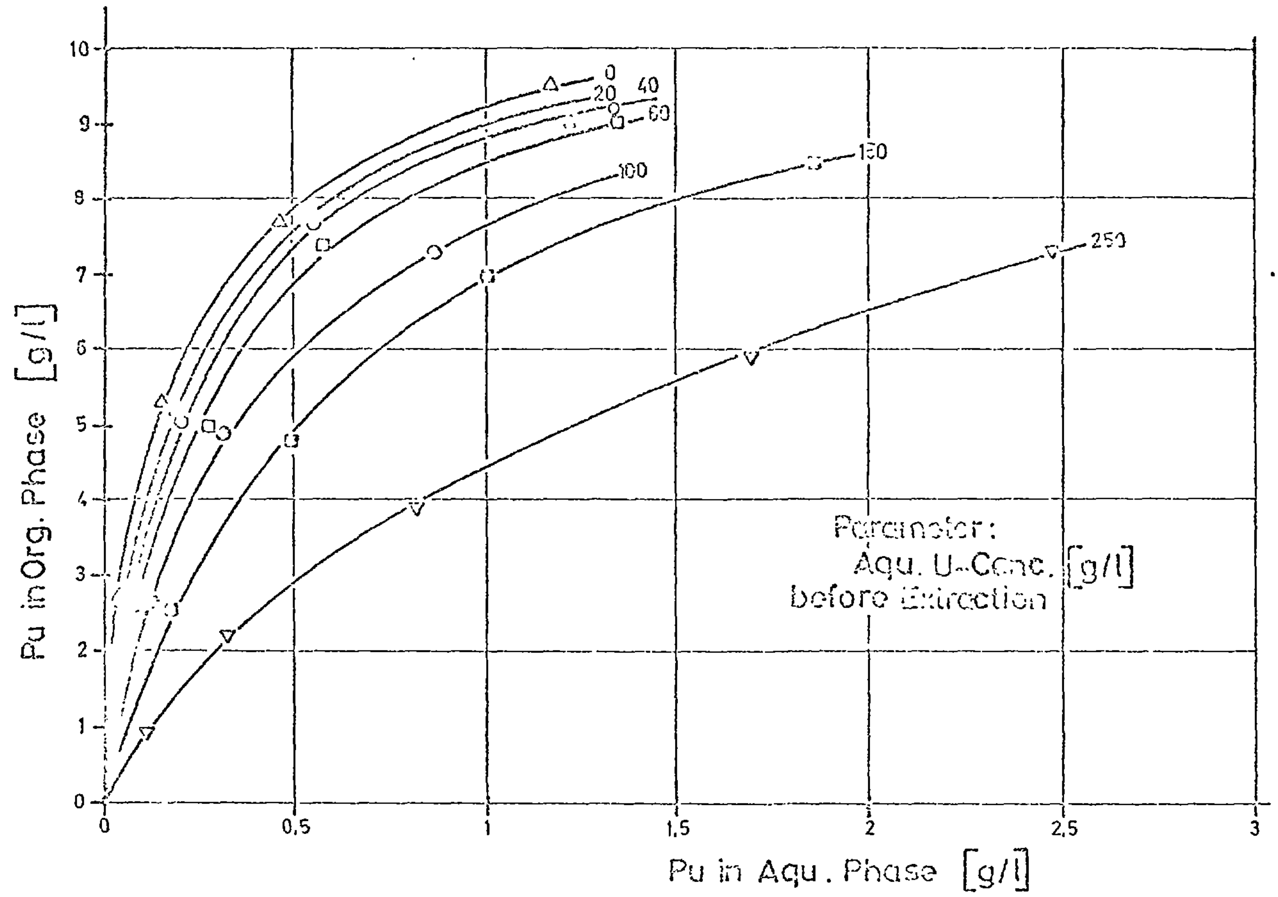
Pu in Org. Phase [g/l]
Pu in Aqu. Phase [g/l]
0
1
2
3
4
5
6
7
8
9
10
0
0,5
1
1,5
2
2,5
3
0
20
40
60
100
150
250
Parameter:
Aqu. U-Conc. [g/l]
before Extraction

Fig.10

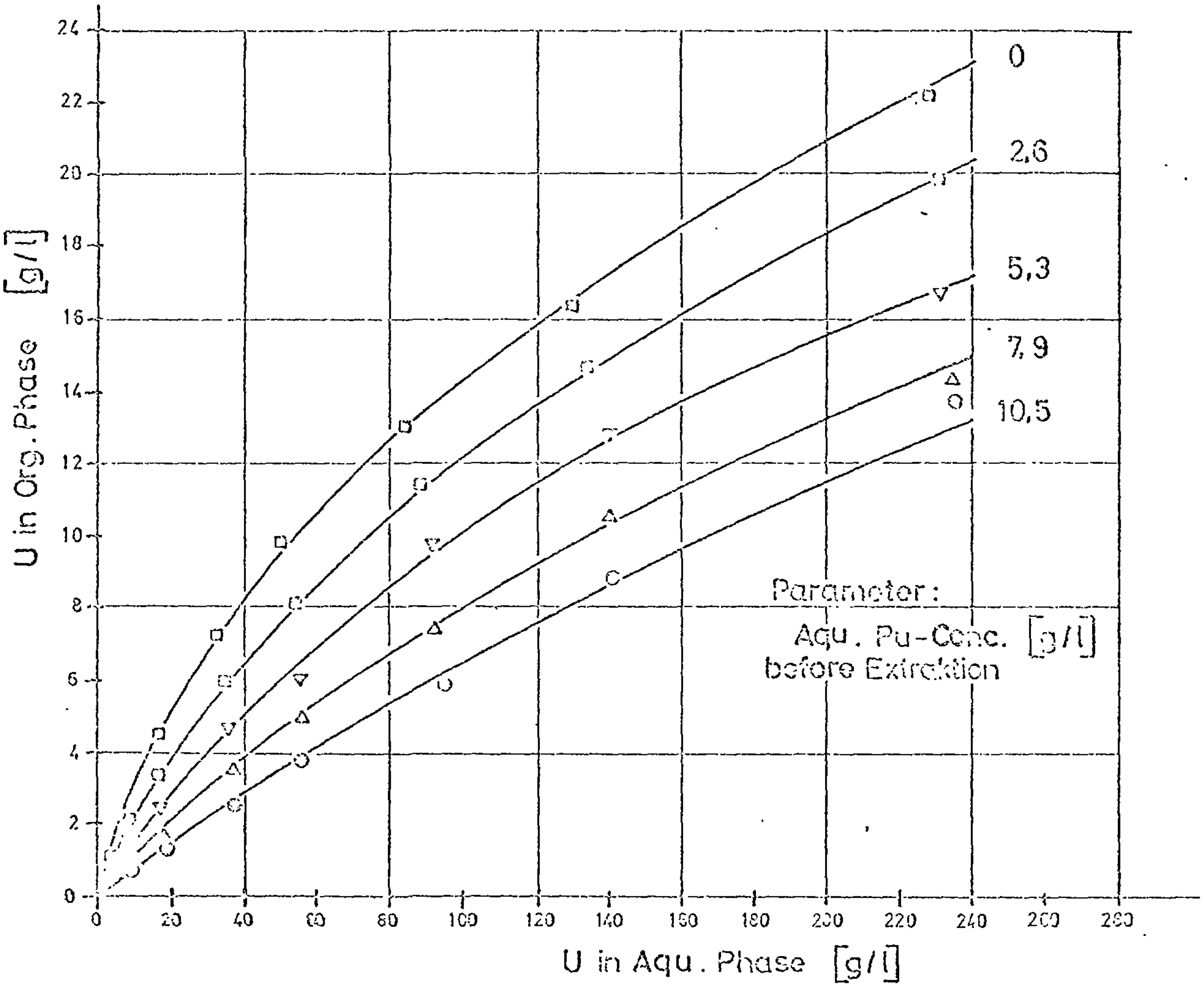

24
22
20
18
16
14
12
10
8
6
4
2
0
U in Org. Phase [g/l]
0
20
40
60
80
100
120
140
160
180
200
220
240
260
280
U in Aqu. Phase [g/l]
0
2,6
5,3
7,9
10,5
Parameter:
Aqu. Pu-Conc. [g/l]
before Extraktion

Fig. 11

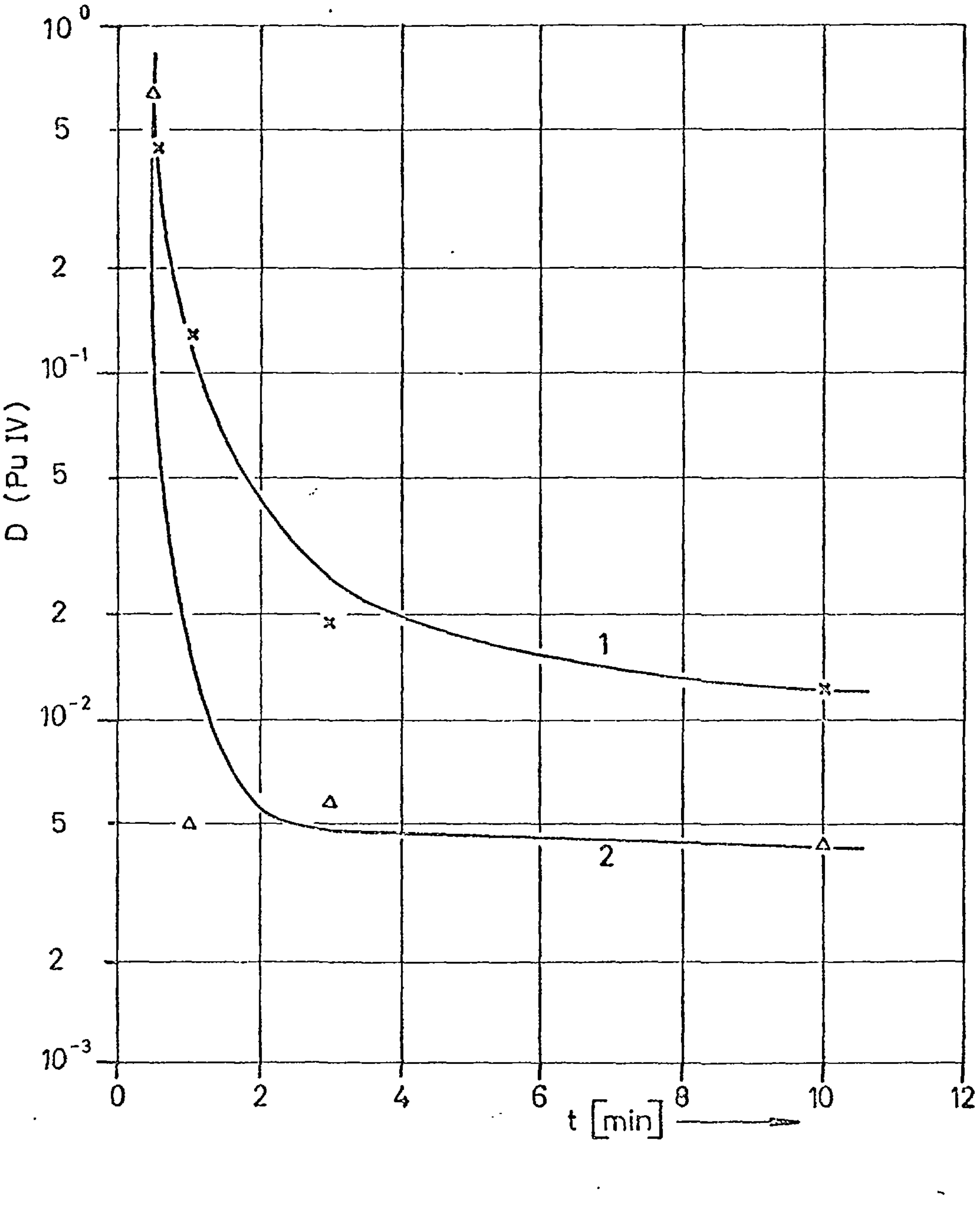

Present Status and Organisation of Advanced Fuel Reprocessing in the Federal Republic of Germany

By W. Schüller

Gesellschaft zur Wiederaufarbeitung
von Kernbrennstoffen mbH
Leopoldshafen bei Karlsruhe (Germany)

Abstract

The second German Atomic Energy Programme (1968-1972) directs major attention to the technical development of the nuclear fuel cycle in the Federal Republic. Research and development effort in the field of fuel reprocessing is shared between the Nuclear Research Centers of Karlsruhe (GfK) and Jülich (KfA).

The Karlsruhe work is mainly directed towards the adaptation of aqueous solvent extraction methods to the processing of high burnup Uranium/Plutonium-fuels of advanced thermal and fast breeder reactors. The center of Jülich is working on reprocessing of Thorium-fuels for high temperature gas-cooled reactors, for which Thorex or non-aqueous processing methods are considered as alternatives.

Germany's first reprocessing plant (WAK) with a capacity of 200 kg UO_2/day is under construction next to the Karlsruhe Center and will start trial operation this year. This

prototype plant, erected from government funds and operated by industry (GWK) will aid in the training of personnel and accumulation of plant experience. In a second phase the plant will be used for the technical-scale demonstration of reprocessing methods for advanced fuels.

Close collaboration between government-owned research centers and industry is assured by long term development programmes on fuel reprocessing, one carried out at Karlsruhe between GfK and GWK, the other by an association between KfA, Jülich, and several industrial companies. The main lines and present status of research and development work are briefly outlined.

1. Introduction

Reprocessing of irradiated fuel for the recovery of fissile material is recognized as an important part of the fuel cycle for the generation of nuclear energy. The continuing development of reactor and fuel technology therefore demands, that present fuel reprocessing techniques be improved or new methods be developed, which must take account of increasing fuel burnup, reduced cooling time and new types of fuel introduced by advanced converter or breeder reactors.

Realizing the great importance of fuel supply and of fissile material recycle for the development of nuclear energy, the Federal Government, in the 2nd German Atomic Energy Programme (1968-1972), has directed special attention to the technical development of the fuel cycle in the Federal Republic.

In the field of fuel reprocessing, research and development effort is mainly shared between the government-owned Nuclear Research Centers of Karlsruhe (Gesellschaft für Kernforschung mbH, GfK) and Jülich (Kernforschungsanlage, KfA), which both collaborate closely with industry. The following diagram indicates the organisation of reprocessing activities in the Federal Republic of Germany.

Considering that fast breeder development is the predominant project at Karlsruhe, the development in fuel reprocessing is concentrated on the adaptation of aqueous solvent extraction methods to the treatment of Uranium/Plutonium fuels for advanced thermal and fast breeder reactors.

On the other hand, the center of Jülich, engaged in the development of the high-temperature gas-cooled Thorium reactor and other advanced reactor concepts based on the Thorium-Uranium-cycle is performing research and development work on reprocessing of thorium fuels.

The third major reprocessing activity in Germany, and a step towards industrial engagement in this part of the fuel cycle, is the construction of Germany's first fuel reprocessing prototype plant (WAK) in close neighborhood of the Karlsruhe center. Erected from government funds, this plant is owned by Gesellschaft für Kernforschung mbH (GfK) and will be operated by Gesellschaft zur Wiederaufarbeitung von Kernbrennstoffen mbH (GWK), a subsidiary of 4 German industrial companies, interested in the fuel cycle. The WAK has a throughput of 200 kg UO_2/day and will start trial operation this year.

Reprocessing of Uranium-Plutonium Fuels

Probably the most important reactor development in the German Atomic Energy Programme is the fast breeder project, conducted by the Karlsruhe Nuclear Research Center in close cooperation with industry. In the context of this project, some institutes of the center, in particular the Institute for Hot Chemistry (IHCh), have ~~been~~ actively worked for some time on the development of suitable methods for fast breeder fuel reprocessing.

With the WAK plant nearing completion, reprocessing activities at Karlsruhe have been reorganized on a much broader basis. Originally, the WAK had been conceived to give the German industry her own experience in the construction and operation of a reprocessing plant as a preparation to later commercial activity in this field. This is still the primary objective. However, the plant's location in the immediate vicinity of the Karlsruhe center offers a unique possibility for close cooperation between government-conducted research and industry-oriented plant operation to further the development of reprocessing technology.

2.1 The Karlsruhe development programme for aqueous fuel reprocessing

At the end of 1967, GfK and GWK therefore decided to coordinate their activities and commonly drafted a long-range development programme on fuel reprocessing, which was recommended by the German Atomic Commission to be included in the medium-term budget planning of the Bundesminister für wissenschaftliche Forschung. This programme covers a period of 8 years and is open to other partners; international collaboration is also being considered.

The most important point of the Karlsruhe programm is the development and adaptation of aqueous solvent extraction methods to the processing of high burnup fuels from advanced reactors, in particular those of the fast breeder.

Regardless of earlier contrary opinions, these methods have proven to be extremely flexible and promise further development potential. An important additional argument was the decision of the fast breeder project in favor of combined core-blanket processing of SNR-fuel. This decision allowed to drop the idea of a special reprocessing facility for fast breeder fuel, which may be processed in the WAK or later in a commercial solvent extraction plant in sequence with fuels of conventional thermal power reactors.

More generally, the development programme includes the following subjects:

1. Reprocessing of advanced fuels, in particular those from fast breeder reactors,

2. Recovery and processing of neptunium and transplutonium elements,

3. Radioactive waste handling and ultimate disposal,

4. Improvement of fissile material control methods,

5. In-line instrumentation and process control.

The following comments are restricted to the first point, in accordance with the subject of this panel.

2.2 Principle subjects and present status of work

The research and development work under the first title of the programme may be grouped into the following subjects:

1. Head-end treatment and dissolution of breeder fuels,

2. Improvement of process steps affected by high burnup and/or short cooling times,

3. Pu-flowsheet chemistry and Pu-process equipment.

2.2.1 Headend-treatment and dissolution

Fuel elements of the Na-cooled breeder present special handling problems due to high heat release and sodium adhering to the surface or trapped in the fission gas plenum of the fuel pins. Nevertheless, chop-leach processes developed for light water reactor fuels should be applicable.

A detailed study is being performed to evaluate the optimum conditions of pre- and post-transport cooling times, choice of method and coolant for heat removal during fuel transport, storage and disassembly, and of sodium removal. The results of this study will allow to decide which detailed development work is required.

The problems associated with the dissolution of mixed oxide fuel (UO_2/PuO_2) have been studied in cold laboratory tests and will be continued with irradiated material next year. This work will be supplemented by the development of pretreatment methods of carbide breeder fuels.

2.2.2 Process steps affected by high burnup and short cooling time

Fuels of high power density and short cooling time contain~~s~~ significant quantities of I-131, which must be efficiently removed from dissolution and vessel off-gases. Plant size experiments in the presence of nitrous fumes are being performed at present to improve Iodine retention.

Feed digestion methods for the removal of Ruthenium as a volatile Ru-tetroxide prior to extraction are being studied and have yielded first practically useful results.

One of the important consequenses of high fuel burnup in aqueous processing is radiation degradation of the solvent. Detailed studies have been made on the radiation stability of TBP/n-Alcane and of its influence on Pu-losses and Ru- and Zr/Nb-decontamination. These studies will be extended to other solvents, and evaluated to improve solvent regeneration.

The best way, in our opinion, to reduce the radiation load on organic solvents is the decrease of contact time by using fast contactors as extraction equipment. Studies on the extraction kinetics of Uranium and Plutonium in the TBP/HNO_3 system have shown, that these short contact times are sufficient to reach equilibrium. Based on Savannah River experience, we have developed a centrifugal extractor unit, which was extensively tested in cold pilot runs for hydraulic and extraction behavior and is now ready for plant use. A third extraction cycle, composed of two such centrifugal-batteries, is being installed in the WAK and will start active operation together with the plant next year.

It is expected, that sufficient plant experience with this type of fast extractor will be available before the necessity for breeder processing arises. More details about the development of the centrifugal extractor and its integration into the process scheme will be given in a separate technical paper by W. Knoch and B. Roth.

2.2.3 Plutonium flowsheet-chemistry and process equipment

The main difference between thermal fuels and fast reactor fuels is the Plutonium content.

Present light water reactor fuels contain between 0.6 and 0.8% plutonium, a value which will rise to 2 - 3% in fuels for thermal recycle of plutonium, and to 10 - 30% in fast breeder fuel.

The study of Pu-behavior in the PUREX extraction system has therefore been extended to flowsheets with high Pu-concentrations. This work was supplemented by the determination of empirical distribution functions, and analysis of the extraction mechanism of organophosphorous coupounds by nuclear magnetic resonance spetroscopy. Improved knowledge of plutonium extraction chemistry has lead to the development of a new TLA/CCl_4 extraction process for the recovery of Plutonium from fuel fabrication-scrap, which will be utilized by the firm ALKEM in the near future.

U/Pu-partitioning has been improved by development of two processes for Pu-reduction, one by the use of hydrazine stabilized U(IV)-nitrate, the other by direct electrolysis with a gold-cathode and titanium-anode.

The future need to handle considerably larger quantities of plutonium is the main reason for development work on special Plutonium-process equipment, including a pilot Pu-nitrate evaporator, continuous Plutonium-anion exchange purification equipment and a selfvented Plutonium-nitrate transportation bottle.

More details on the Studies of plutonium flowsheets and plutonium reduction methods will be presented in a separate paper by G. Koch et al.

3. Reprocessing of Thorium Fuels

In the frame of the German Atomic Programme, the Nuclear Research Center at Jülich is collaborating with industry in the development of advanced reactors, based on the Th-U-cycle. Priority is assigned to the high-temperature gas-cooled Thorium Reactor (THTR), whilst the heavy water moderated and the molten salt Thorium breeder are considered as long term alternatives.

In order to fully utilize the potential of the Th-U-cycle, it is necessary to develop suitable reprocessing methods for Thorium-based fuels, which have up to now received comparatively little attention.

3.1 The Jülich project for reprocessing of Thorium Fuels

Therefore the Federal Ministry for Scientific Research (BMwF) initiated, in 1966, a long term R & D project for the development of technically and economically feasible methods for reprocessing of Thorium fuels as arising from the German reactor development programme.

This project is directed by the Institute of Chemical Technology of the Kernforschungsanlage (KfA), Jülich, and carried out with the participation of 7 well-known industrial companies. The first phase of the project (1966 - 1968) was characterized by a relatively broad research and development programme on a laboratory scale, leading to the selection of a few promising methods, which are now being realized on pilot plant scale to be examined for their technical and economic potential.

This second phase of the project (1969 - 1972) will be concluded with the hot operation of a small pilot plant with a throughput of 1 - 2 kg/d heavy metal, to be installed in the hot cell facility of the Jülich research center. A pilot plant of this size could handle the fuel of a 100 MW-Thorium Reactor on an interim basis. The final decision as to the construction of a larger prototype plant specifically designed for Thorium fuels, or the possible integration of thorium processing campaigns into an industrial reprocessing plant for conventional light water reactor fuels will be made in the light of pilot plant experience and thorium reprocessing demands.

It may be interesting to note, that in the initial phase of the Jülich programme, the main effort was directed towards an all non-aqueous process, in agreement with the widely shared opinion, that aqueous methods were about to become obsolete. Fluoride volatility, and to a smaller extent also pyrometallurgy received primary interest at first. However, in the light of experimental evidence, in particular some rather discouraging results concerning the applicability of pyrochemical and -metallurical processes, the attention returned more and more to aqueous solvent extraction, which promises superior flexibility and economy in the foreseable future.

3.2 Present Concept and preliminary results

The present work is concentrating on three principal subjects:

1. Head-end processes for graphite-base fuels and coated particles,
2. Aqueous solvent extraction methods,
3. Fluoride volatility.

2. and 3. are regarded as alternative separation processes, both requiring a pretreatment step according to one of the methods examined under 1.

3.2.1 Head-end Processes

The grind-leach process, which had been examined originally, is now considered absolutely useless, the main reason being the high uranium losses due to adsorption or inclusion in the graphite and the formation of organic graphite- or carbon compounds, which have a detrimental effect on the subsequent solvent extraction process. This head-end method has therefore been discarded completely.

Chemical and electrolytical disintegration of the spherical graphite fuel elements received considerable interest. The reaction of graphite with different metals or compounds, in particular potassium, leads to destruction of the molecular grid and can be used to separate the heavy metals from the bulk moderator graphite. However, because of the inherent safety problems in handling liquid alkaline metals and the slow reaction speed of electrolysis, the disintegration methods have been abandoned - at least temporarily - in favor of a combustion or chlorination treatment.

The burn-leach process is now considered the first choise in view of the fact, that off-gas cleaning methods have proven to be easier than anticipated. SiC-coated particles require an interim grinding step before leaching. Chlorination, combined with preliminary grinding or disintegration in a high-temperature furnace has turned out to be an attractive alternative. At chlorination temperatures of 800 - 1000 °C all Uranium and Thorium as well as most of the fission products are transformed into volatile chlorides, which can be condensed and further treated by aqueous solvent extraction. The graphite residue can be burned or stored.

3.2.2 Aqueous Solvent Extraction

As mentioned earlier, aqueous solvent extraction has proven to remain the most attractive process, also for the decontamination of thorium fuels and separation of its constituents. Available large-scale technical experience and the possibility to use proven extraction equipment like mixer-settlers or pulsed columns provide a firm basis for competitiveness.

The use of TBP in a modified THOREX-Process with high U/Th-feed ratio is of primary interest in the Kernforschungsanlage-programme; however, the use of longchain tertiary amines is also evaluated because of their higher radiation stability.

Protactinium-233 separation will be performed by adsorption on a Vycorglas or Silicagel column, peferably before the extraction step, in order to reduce radiation degradation of the solvent.

3.2.3 Non-aqueous Methods

Fluoride volatility is retained as an alternative to solvent extraction, but would also be combined with one of the head-end treatments mentioned before. It is no longer expected, that such a process would result in substantial economic advantages as compared to aqueous methods.

Solvent degradation problems have become less important with the possibility to use fast contactors. The arguments of compact waste handling and reduced criticality risk have lost much of their weight, in view of the PUREX waste solidification techniques and the severe throughput limitation resulting from fissile mass control.

However, with respect to the predominant role of UF_6 in isotopic enrichment, the recovery, purification and handling of fissile material in the form of fluorides retains a certain interest.

All initial activities in Jülich, regarding the development of pyrochemical methods have been terminated, with the exeption of the pyrosulfate pretreatment for coated oxide particles, which appears very attractive and will be further studied.

From the processes studied in the Thorium reprocessing project, 4 flowsheet alternatives, one of which is a non aqueous process, have been selected and will be further tested in pilot plant equipment.

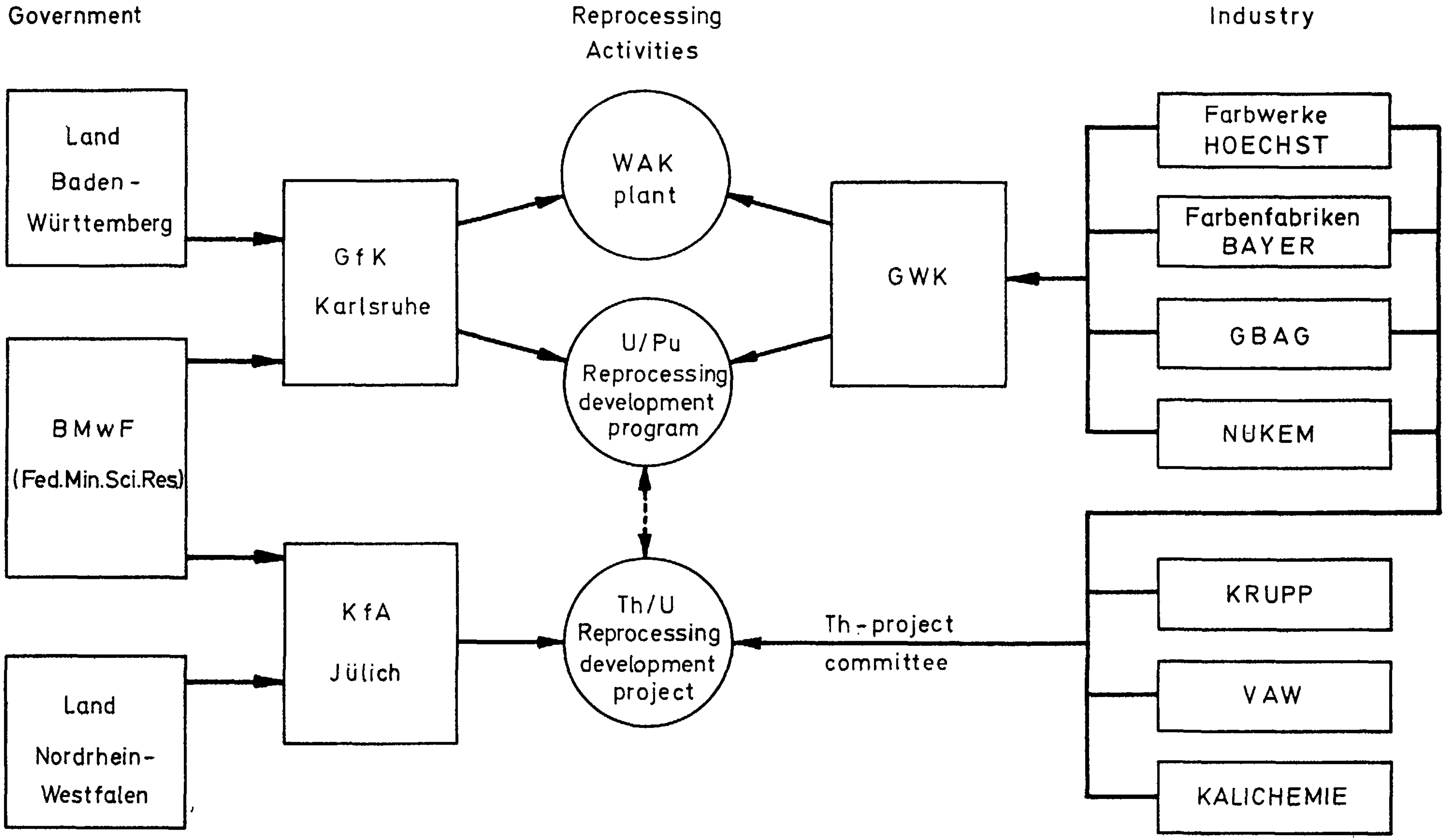

Fig. 1 Organisation of Reprocessing Activities in the Federal Republic of Germany

Reprocessing of Japan Experimental Fast Reactor Fuel in a Purex Reprocessing Plant

Shigeru SATO *
Tadaya HOSHINO *
Keiji NAITO **

Introduction

Power Reactor and Nuclear Fuel Development Corporation (PNC) in Japan is promoting an experimental fast breeder reactor project. The reactor, Japan Experimental Fast Reactor (JEFR), is scheduled to be critical in 1973. The thermal output is set about 100 MW and mixed oxides of uranium and plutonium are used as fuel and sodium is selected as a coolant.

On the other hand, PNC is proceeding with a spent nuclear fuel reprocessing project aiming at start of operation in 1973. Design for the plant based on the Purex process was completed last January by Saint-Gobain Techniques Nouvelles of France and the plant is proposed to be located at Tokai-mura about 120 Km north-east of Tokyo. The plant will have a capacity of reprocessing 0.7 metric ton of spent fuel per day and is designed to process two main types of fuel. One is Magnox clad natural uranium irradiated to 3,900 MWD/t and cooled 155 days.

* Power Reactor and Nuclear Fuel Development Corporation
** University of Nagoya

The other is zircaloy or stainless steel clad 4 per cent enriched uranium oxide fuel irradiated to 28,000 MWD/t and cooled 180 days. Process outline of the plant is described in the Appendix.

This paper presents a preliminary feasibility study on reprocessing of the JEFR fuel in the plant.

A conceptual design of the JEFR fuel element is shown in Fig. 1 and Table 1.

Chapter I Problems in Fast Reactor Fuel Reprocessing by Solvent Extraction Process

1. Characteristics of a fast reactor spent fuel in comparison with a thermal reactor fuel may be outlined as follows:
   - (a) High burn-up, high specific activity
   - (b) High specific heat due to high fission product content
   - (c) A large amount of fission products
   - (d) Build-up of higher isotopes
   - (e) Short-cooled fuel due to economic demand

2. Activity and heat generation for a light water reactor (LWR), the experimental fast reactor (JEFR) and a fast breeder reactor are shown in Table 2 respectively. Both the specific activity and heat generation of a fast reactor are around 4 or 5 times of those of a light water reactor.

3. The following points should be checked beforehand when a fast reactor fuel is processed in a Purex reprocessing plant which has been designed for processing of a light water reactor fuel.
   - (a) Shielding

     γ shielding and neutron shielding especially after the the last purification cycle due to higher isotopes.
   - (b) Heat removal

     Heat removal in such areas as receiving, head-end and high level waste facilities.

(c) Criticality control

Change of criticality control is obliged by higher plutonium content.

(d) Environmental limit

The amount of Kr-85 and H-3 among isotopes which are released into the environment can be a limiting factor to determine the plant capacity.

Concerning I - 131, a limit of its release will require long cooling which conflicts with the economical demand of short cooling.

(e) Adaptability of mechanical handling devices

Fuel element handling devices and a chopping machine are necessary to be fit to handle the fuel.

(f) Fission spectrum

Difference of fission spectrum between a light water reactor and a fast breeder reactor fuel may affect the solvent extraction and waste treatment processes in order to achieve necessary decontamination.

(g) Solvent damage

Radiation damage of solvent due to high specific activity will cause loss of fissile materials, decrease of the decontamination factor and increase of solvent replacement.

4. There are the following measures to solve problems mentioned in the preceding section.

(a) Long cooling

Problems due to activity such as shielding, heat removal and environmental limit can be solved by long cooling of fuel, but it is against economical demand.

(b) Dilution

In dissolution and the following processes, difficulties due to criticality, specific activity and heat generation may be avoided by processing the fuel in a diluted system. This method is however not applicable to the final concentration process of products. Processing capacity has to be decreased.

(c) Blending core with blanket material

A core may be blended with its blanket in the dissolution process in order to avoid criticality, specific activity and heat generation problems. However, when a core contains enriched uranium, the value of enriched uranium will be lowered.

(d) Process conditions

Modification of process conditions such as acidity and temperature may be necessary in order to increase the decontamination factor of a fission product.

(e) Use of neutron poison

Neutron poison may be used as measures for criticality control although its use is not popular now.

(f) Removal of Kr and I

It should be considered to install facilities to remove Kr and I from off-gas when the amounts of those isotopes are a limiting factor.

(g) Improvement of solvent recovery process

(h) Rapid contactor

Use of a rapid contactor for solvent extraction will minimize solvent degradation.

Among the above measures, one from (a) to (d) are comparatively easily applicable to an existing plant.

Chapter II Processing of JEFR Fuel

Following the general discussion above, a couple of plans are examined in this chapter in order to reprocess the JEFR fuel in the PNC Reprocessing Plant described in the introduction.

1. Daily Throughput

In the case where a certain plant is used to reprocess a non-specified fuel in the plant design, there might be several restrictions to the design capacity of the plant. In this case a daily amount to be treated is decided finally as 44.4 Kg (4 element-cores only), taking the following two points into consideration :

- processing capacity of plutonium purification
- criticality control of a batch dissolver

Incidently, an axial blanket part, after chopping, is introduced separately into another dissolver and is reprocessed after the core part is processed.

(a) Processing capacity of plutonium purification cycle

Daily processing capacity of plutonium purification cycle of the plant is 7.6 Kg total plutonium. On the other hand, the amount of plutonium contained in the 4 fuel element-cores is 10.4 Kg total plutonium and 7.7 Kg is fissile out of 10.4 Kg total.

Even the total amount of plutonium to be treated is over design capacity, the plant will be flexible enough to accept such an excess.

From a criticality control point of view the plant, designed to be safe for treatment of 7.6 Kg fissile plutonium per day, can also be used for processing the JEFR fuel without sacrificing the safety factors applied in the plant design.

(b) Criticality control of batch dissolver

The proposed quantity of treatments is checked from a criticality point of view of a batch dissolver.

In conclusion the dissolver loaded by chopped fuel before a dissolution starts can be controlled by mass limitation (note 1), and the dissolver during and after dissolution may be controlled by a combination of geometry and concentration.

A skeleton of the batch dissolver can be seen on Fig. 2. However, in order to assure safe operation, it is necessary to pay close attention to avoid a formation of local excess concentration and it is worth considering use of neutron poison.

2. Setting 4 element-cores as the processing capacity and 180 days as the cooling period, no essential problem may be found regarding shielding (note 2) and heat removal ability of the plant and also radioactive gas release such as Kr-85 and I-131. These are given in Table 2.

3. Proposed Process

(a) Head-end

So far as mechanical dimensions of fuel and its handling are concerned, no essential problem is expected.

As concerns dissolution of high burned-up oxide fuel, few knowleadge has been obtained so far. However some difficulties are anticipated.

(b) Solvent extraction

In order to treat the JEFR fuel by solvent extraction technique, a process for light water reactor fuel is basically applicable.

In this connection, flowsheet No. 1 (similar to flowsheet for LWR fuel treatment) and flowsheet No. 2 (modified alternative to No. 1) are proposed. Fig. 3 shows a basic idea of both processes together with the LWR fuel treatment process.

i) Flowsheet No. 1

Gross flow rate, flow ratio and acid concentaration are chosen as nearly same as the conditions of LWR fuel processing.

This flowsheet is characterized apparently in the following points :

- use of 10 % TBP/diluent as a solvent
- a diluted system except plutonium treatment

A relatively low solvent concentration corresponding to the diluted system is used.

Such process as described above may have some problems as follows :

- low decontamination factor (D. F.) due to a low solvent saturation by extractable materials.
- necessity of inventory of relatively highly enriched uranium as a plutonium reductant

Besides these problems, equipment designed for the PNC plant is well adapted to the present process design, for example, the number of stages of a mixer-settler is such that can meet the requirments of mutual separation and recovery of materials.

Even when a fuel of high specific activity has to be treated, a radiation damage of solvent is rather small (note 3) in comparison with the case of LWR fuel processing because of the diluted system.

As concerns criticality control of the solvent extraction process, this can be assured by the combination of geometry and concentration limitation.

ii) Flowsheet No. 2

This is proposed to improved the flowsheet No. 1 and is specified as follows :

- use of 3 % TBP/diluent as a solvent, instead of 10 % TBP

- use of Fe (II) as a reductant, instead of U (IV)

  Fe (II) is conceived in order to avoid the use of enriched uranium.

The occurrence of a salty waste due to the use of Fe (II) can be justified by the fact that the amount to be treated is small.

A performance of the solvent extraction system using 3 % TBP solvent with the present processing target has not been proved in several aspects, for example,, a recovery, decontamination and so on, mainly because of a shortage of distribution coefficient data.

(c) Plutonium evaporation

No modification of the present plant design will be required.

(d) Denitration of uranium

The facilities of concentration and denitration processes for enriched uranium product may have to be modified from a criticality control point of view, so that the nitrate solution after pre-concentration is suggested to be stored.

(e) Waste treatment and storage

No difficulty can be found in the liquid and solid waste treatment process. A plutonium fission by fast neutrons gives high ruthenium (Ru-106) yield and this fact must be taken into account at the time of process design. In the present case, however, the total amount of ruthenium is smaller than. that of the LWR fuel.

Note 1

Critical mass of the U-Pu mixed system is estimated as 36 Kg U-Pu (fissile), assuming that uranium is equivalent to plutonium from a nuclear safety point of view and at the condition of (Ref. 2) ;

- full water reflection
- H/Pu = 0 (H: Number of hydrogen atom)
  (Pu: Number of plutonium atom)
- Pu 240 = 0

Taking 0.46 as safety factor, a recommended mass is 16.6 Kg U-Pu fissile (Ref. 6). 4 element-cores contain 14.4 Kg fissile uranium and plutonium out of 44.4 Kg total uranium and plutonium.

Note 2

As concerns the shieldings, in any event the JEFR fuel does not exceed the value set up for the LWR fuel processing. A few examples are shown below :

	LWR fuel	JEFR fuel (Cooling-180d)
Mechanical Handling	5×10^3 Ci/cm	2.6×10^3 Ci/cm
Dissolution	1.8×10^3 Ci/l	5.9×10^2 Ci/l

Note 3

Radiation dose in the case of processing the JEFR fuel is estimated as follows:

Mixer	0.02 wh/l
Settler	0.04 wh/l

In the case of LWR fuel processing, corresponding radiation dose will be nearly 6 times.

Table 1 Fuel Charactreistics *) Unit ; kg as metal/element

Case	I	II	III	IV	V
Reactor	LWR	JEFR (core)	JEFR (ax. Blanket)	FBR (Core)	FBR(ax. Blanket)
Mechanical characteristics					
Total Length	4,700 mm	3,020 mm			
Radial Length	260 mm	80 mm			
Weight		67 kg			
Fuel Material					
Cladding	S.S. or Zr	SUS 32	SUS 32		
Meat	Oxide	Oxide	Oxide	Oxide	Oxide
Fuel Composition (a/o)					
Pu- 239		16.1(1.80*)		14.11	
240		5.4(0.61)		6.95	
241		1.1(0.13)		1.56	
242		0.5 (0.06)		0.84	
U-235	4.	15.4 (1.68)	0.7		0.3
236					
238	96	61.5 (6.82)	99.3	76.54	99.7
Weight of U+Pu/element		11.1 kg			

Burn up Characteristecs					
Pu/U Fission Ratio		1/0.91	0/1	1/0	
Burn Up	28,000MWD/t,u	48,000MWD/t,U-Pu	860MWD/t,u	100,000MWD/t,U-Pu	8,000MWD/t,
Specific Power	35 MW/t,u	120MW/t,U-Pu	2.15 MW/t,u	144 MW/t,U-Pu	
Irradiation Time	800 days	400 days	400 days	695 days	695 days
Referrence				(4)	(4)

Table 2 Activity and Heat Generation *) Cooling 30 days

Case	I	II			III			IV		
Reactor	LWR	JEFR (Core)			JEFR (ax. Blanket)			FBR (Core)		
Cooling time(d)	180	100	180	270	100	180	270	100	180	270
Total Activity (β Ci/kg)	4.6×10^{3}	2.2×10^{4}	1.4×10^{4}	1.0×10^{4}	3.5×10^{2}	2.3×10^{2}	1.6×10^{2}	3.2×10^{4}	2.3×10^{4}	1.5×10^{4}
Kr 85	1.1×10	1.4×10	1.3×10	1.3×10	3.8×10^{-1}	3.7×10^{-1}	3.7×10^{-1}	1.3×10	1.3×10	1.3×10
I 129		5.3×10^{-6}	5.3×10^{-6}	5.3×10^{-6}	6.6×10^{-8}	6.6×10^{-8}	6.6×10^{-8}	1.8×10^{-5}	1.8×10^{-5}	1.8×10^{-5}
I 131	1.5×10^{-4}	1.4	1.3×10^{-2}	4.4×10^{-7}	1×10^{-2}	8.9×10^{-5}	3.1×10^{-9}	4.9	4.2×10^{-2}	1.4×10^{-6}
Ru 103	5.5×10	9.3×10^{2}	2.3×10^{2}	4.5×10	1.4×10	3.5	6.7×10^{-1}	2.3×10^{3}	5.4×10^{2}	1.1×10
Ph 103m	5.5×10	$*7.4\times10^{3}$			$*1.3\times10^{2}$			$*1.2\times10^{4}$		
Ru 106	3.9×10^{2}	1.5×10^{3}	1.3×10^{3}	1.1×10^{3}	3.7	3.3	2.9	5.1×10^{3}	4.4×10^{3}	3.7×10^{3}
Ce 141	3.7×10	6.5×10^{2}	1.1×10^{2}	1.5×10	1.1×10	1.9	2.7×10^{-1}	9.3×10^{2}	1.3×10^{2}	2.8×10
Ce 144	1.0×10^{3}	2.1×10^{3}	1.7×10^{3}	1.4×10^{3}	4.2×10	3.5×10	2.8×10	3.2×10^{3}	2.6×10^{3}	2.1×10^{3}
Zr 95	2.5×10^{2}	2.1×10^{3}	9.5×10^{2}	3.6×10^{2}	4.4×10	2.0×10	7.1	2.7×10^{3}	1.4×10^{3}	5.7×10^{2}
Nb 95	5.3×10^{2}	3.7×10^{3}	1.8×10^{3}	7.4×10^{2}	7.4×10	3.7×10	1.5×10	5.1×10^{3}	2.6×10^{3}	1.1×10^{3}
Sr 89	1.4×10^{2}	8.7×10^{2}	3.1×10^{2}	1.0×10^{2}	2.2×10	7.8	2.5	9.5×10^{2}	3.6×10^{2}	1.1×10^{2}
Sr 90	9.6×10	9×10	9×10	9×10	2.1	2.1	2.1	1.3×10^{2}	1.3×10^{2}	1.3×10^{2}
Cs 137	9.0×10	1.5×10^{2}	1.5×10^{2}	1.5×10^{2}	2.9	2.9	2.9	3.2×10^{2}	3.2×10^{2}	3.2×10^{2}
U 237 g/kg	3×10^{-11}									
Np 237 Ci/kg	8.2×10^{-5}									
g/kg	0.12									

Am 241	Ci/kg	0.15									
	g/kg	0.045									
Cm 242	Ci/kg	6.5×10^{-3}									
	g/kg	2×10^{-6}									
Heat Generation (Watt/kg)		14	89	61	38	1.4	0.92	0.58	140	77	61

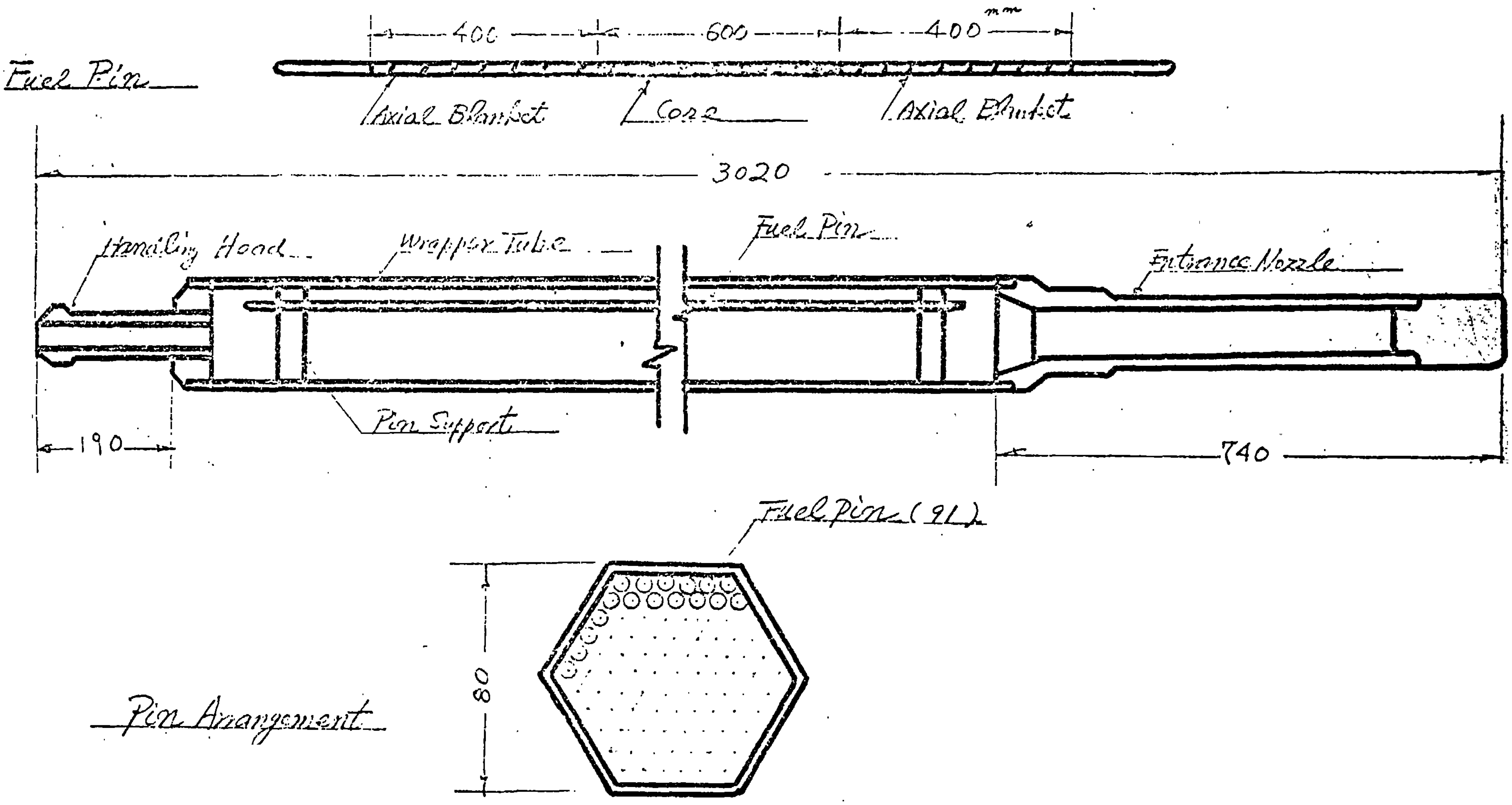

Fig 1 Conceptual Design of JEFR Fuel Element

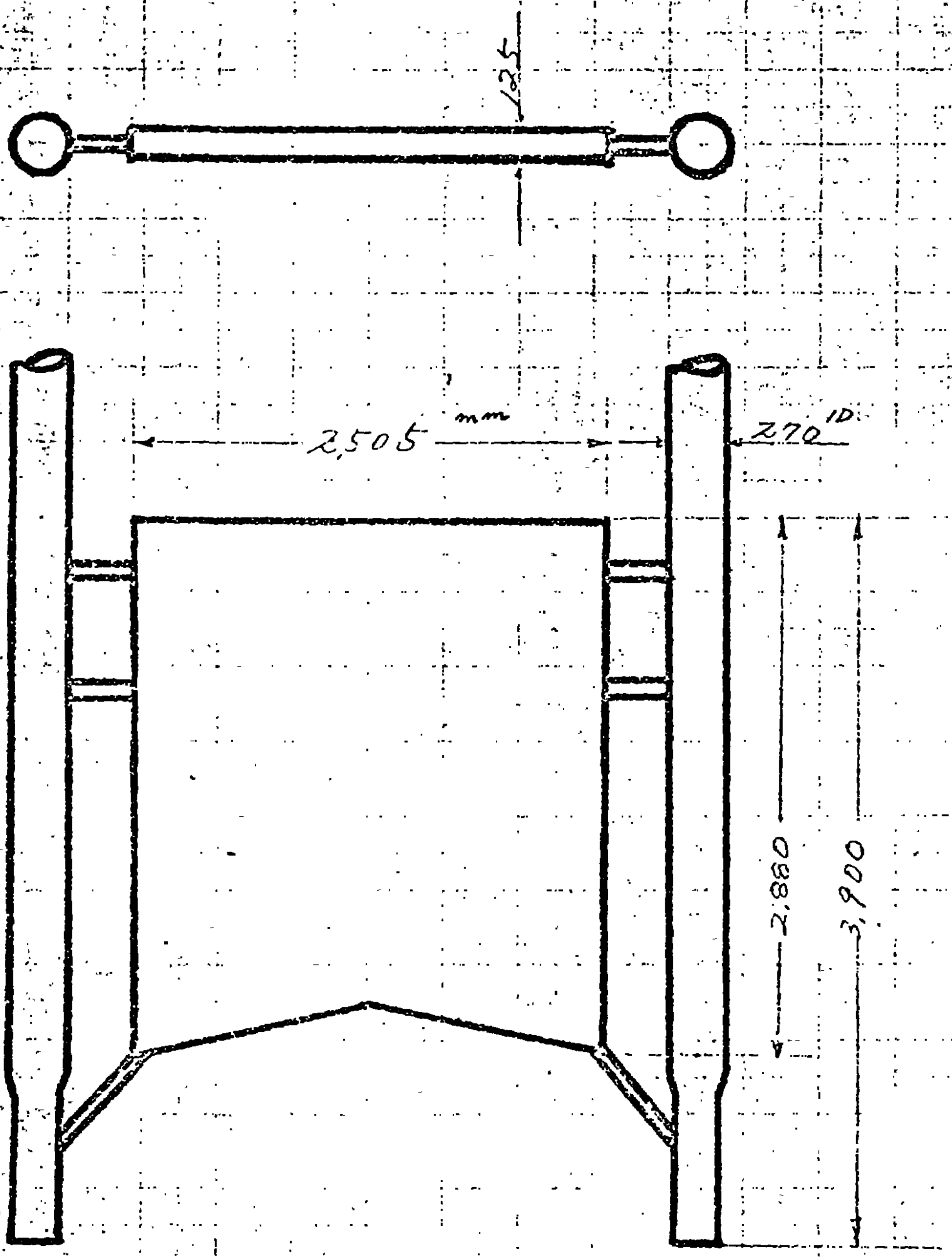

Fig 2 Skeleton of Batch Dissolver
(Dimension is inside measurements)

Fig 3 Proposed Flow sheet

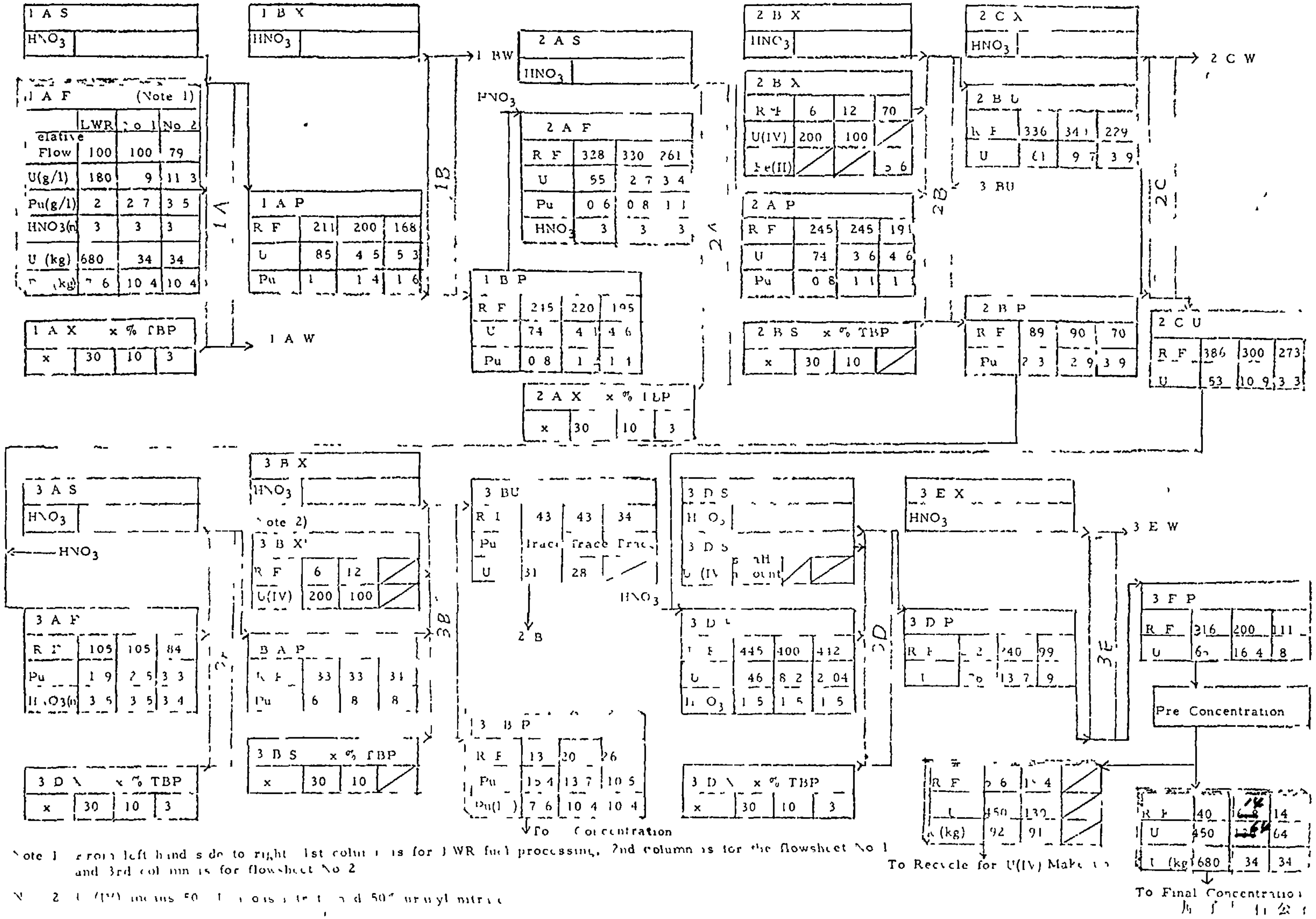

Note 1 From left hand side to right 1st column is for LWR fuel processing, 2nd column is for the flowsheet No 1 and 3rd column is for flowsheet No 2

Note 2 U(IV) means 50 [illegible] and 50% uranyl nitrate

Program in Future

Nuclear power plants in Japan are expected to have a total generating capacity of 10^5 MW in twenty years and fast breeder reactors will account for one-fifth of the capacity. The annual demand for processing of their cores will be around 300 metric tons and its economical reprocessing will become an important task.

A wet reprocessing method will be predominant in the near future for the processing of fast reactor fuels although a dry process has a potentiality in the far future.

Subjects to be developed for a wet process are listed below. transportation, head-end process (decladding, dissolution, design of dissolver), rapid contactor, new solvent, criticality control by neutron poison, solvent regeneration, off-gas treatment.

Appendix : Process Description of PNC Plant (Ref. 1)

1. Cooling and Head-End

Following a period of cooling in reactor ponds, fuels will be transferred to the cooling pond in our plant and stored to achieve an acceptable radioactive level for reprocessing.

Separate head end facilities will be provided for the two main fuel types. In one head-end, the Magnox fuel will be mechanically decladded under water. In this step, appendages such as end-plug will also be removed. The removed Magnox can will then be collected into a flask and be transferred to an ultimate storage silo. The decladded fuel will be dissolved continuously by nitric acid in a dissolver to produce feed for the extraction section of the plant.

The enriched fuel head-end treating system will consist of equipment to mechanically reduce the fuel elements into short sections by chopping and to leach the uranium and plutonium by nitric acid from the chopped fuel in a batch operation. The leached hulls will be transferred to the storage silo.

2. Solvent Extraction

The recovery and purification of the uranium and plutonium products will be accomplished by use of the well-known solvent extraction process using 30% TBP in dodecane. The solvent extraction operations will be performed in countercurrent mixer-settler contactors.

The combined dissolver stream will be decontaminated through two extractions before the uranium and plutonium are separated from each other Each product will be given an additional purification cycle after the partition to further purify the product from fission products and from contamination by the other product The plutonium nitrate product will be concentrated and stored in liquid form

3. Denitration of Uranium

The uranyl nitrate product of the solvent extraction system will be concentrated by evaporation and converted by denitration into solid UO_3 and stored in the UO_3 storage

4 Liquid Wastes Treatment and Storage

High active liquid waste from the first extraction cycle will be segregated and concentrated in an evaporation system and stored after volume reduction.

Medium active liquid wastes from the second extraction cycle, the purification cycle etc will be concentrated by evaporation The concentrate will be transferred to the high active evaporator and nitric acid will be recovered from the condensate

A low active liquid waste treatment system will consist of evaporation and flocculation processes The treated effluent will be discharged into the sea after being monitored

5 Solid Waste Treatment

High active solid wastes generated primarily in the Magnox decladding and enriched fuel chopping operations will be stored in the high active solid waste storage facility

Burnable low active solid wastes will be burned in a incinerator and noninflammable wastes will be incorporated into concrete. The concrete block will be stored

References

1 K. Ishikawa, Reprocessing Project in Japan, Annual Meeting of American Institute of Chemical Engineers, November 1967

2 AHSB(S) Handbook 1, Handbook of Criticality Data, Volume 1, 1965

3. CEA-R-3114, Guide de Criticite, 1967

4 GEAT-4418, Liquid Metal Fast Breeder Reactor Design Study, 1963

5. IAEA, Economics of Nuclear Fuels, SN 105-18

6 TLD-7016. Rev. 1 Nuclear Safety Guide, 1961

7 ORNL-4212, Solvent Stability in Nuclear Fuel Processing : Evaluation of the Literature, Calculation of Radiation Dose, and Effects of Iodine and Plutonium, 1968

8. ANL-5742, Estimation of Fission Product Spectra in Discharged Fuel from Fast Reactors, 1957

ВЫСОКИМ ОБЛУЧЕНИЕМ МЕТОДОМ ЭКСТРАКЦИИ

ШЕВЧЕНКО В.Б.

ИНСТИТУТ АТОМНОЙ ЭНЕРГИИ
им. И.В. КУРЧАТОВА

ХАРАКТЕРИСТИКА ТВЭЛ ПЕРСПЕКТИВНЫХ РЕАКТОРОВ НА ТЕПЛОВЫХ И БЫСТРЫХ НЕЙТРОНАХ

Наиболее характерными ТВЭЛ реакторов на тепловых нейтронах /I/ являются ТВЭЛ Ново- Воронежской электростанции (ВВЭР). ТВЭЛ, длиною 2,5 м и наружным диаметром 8,8 мм, заполнен таблетками из спеченной двуокиси урана с обогащением по U^{235} до 2,5 - 3%. ТВЭЛ объединены в сборки диаметром I44 мм.

В каждой сборке располагается I27 ТВЭЛ по треугольной решетке с шагом I2,3 мм. Покрытие элементов, также как и стенок сборок, выполнено из циркония, легированного ниобием. За кампанию I,5 - 2 года достигается выгорание 20.000 - 30.000 мвт. сутки /т/2/.

На Белоярской электростанции применяется ТВЭЛ (АМБ) трубчатой конструкции, имеющие внешние и внутренние трубки из нержавеющей стали. В кольцевом зазоре находится крупка сплава U - Mo. Содержание Mo достигает 9%. Крупка диспергирована в магнии (12% вес). Обогащение урана по U^{235} достигает ~3%, выгорание - 20.000 мвт. сутки/т.

ТВЭЛ реакторов на быстрых нейтронах (БН) (активная зона) будут состоять из двуокиси урана (обогащённого по U^{235} до 20%) в реакторах - конверторах или из смеси двуокиси урана с 20% двуокиси плутония в реакторах-бриддерах; ТВЭЛ объединяются в сборки, оболочка ТВЭЛ и кожух сборки изготавливаются из нержавеющей стали. В реакторе - бриддере как в активной зоне , так и в экране применяется обеднённый уран. Выгорание будет достигать 100.000 мвт. сутки/т.

В дальнейшем в качестве горючего может быть использован монокарбид урана и плутония.

В таблице I приведены данные по активности и накоплению продуктов деления для реактора ВВЭР-II Ново-Воронежской станции.

Следует отметить, что в ТВЭЛ такой характеристики будет повышенное содержание Np , Am^{241}, Am^{243}, Cm^{244}.

При времени охлаждения, равному I году, активность по β - излучению составит $2,2.10^6$ кюри/т и по γ- 2.10^5 г - экв. Ra /т, при охлаждении в течение 90 дней β - активность достигнет 6.10^6 кюри/т, в течение 160 дней - 4.10^6 кюри/т.

Характеристика ТВЭЛ реакторов на быстрых нейтронах имеется в литературе /3,4/.

Таблица [illegible]

Активность и накопление ПД в ВВЭР-II Ново-Воронежской АЭС

№ п/п	Изотоп	ВВЭР-II Масса (г/т)	А β (кюри/т)	A_μ(г.эквRa/т)
I	Kr^{85}	2I	8,700	
2	Kr	440		
3	Sr^{89}	0,33	9,600	
4	Sr^{90}	620	86 000	
5	Sr	I200		
6	Zr^{95}	I,7	37 000	I9 000
7	Zr	4400		
8	Nb^{95}	2,0	79 000	43 000
9	Mo	3900		
I0	Tc	II00		
II	Ru^{I03}	0,066	2,I00	740
I2	Ru^{I06}	60	200 000	
I3	Ru	2400		
I4	Rh^{I06}	$5{,}6 \cdot 10^{-5}$	200 000	29 000
I5	Rh	430		
I6	Pd	I400		
I7	I	320		
I8	Xe	5I00		
I9	Y +редкие земли	I3500	I400 000	37 000
20	Все остальные	8200	I45 000	76 000
2I	Σ	~42000	~2200 000	~200 000

Удельная мощность - 35 мвт/т

Выгорание - 27000 мвт-дн/т

Начальное обогащение - 3%

Охлаждение - I год

Топливо - UO_2

Кампании - 770 дней

Активность продуктов деления при выгорании 80.000 мвт.сутки/т и охлаждении в течение 100 суток составляет по β - излучению 21.200 кюри и по γ - излучению 10.160 г - экв. Ra на 1 кг для окисного горючего активной зоны, а количество их равно 82,8 кг/т.

Наиболее важными операциями, которые возникли при рассмотрении вопроса в переработке высокооблучённых ТВЭЛ и на которых мы хотели бы остановиться, являются следующие: принцип вскрытия ТВЭЛ и перевод горючего в раствор; подготовка раствора к экстракции; выбор условий экстракции и поведение некоторых продуктов деления.

ВСКРЫТИЕ ТВЭЛ И ПЕРЕВОД ГОРЮЧЕГО В РАСТВОР

Химические методы удаления оболочек и сборок ТВЭЛ типа ВВЭР, АМБ и БН, выполненных из нержавеющей стали или циркония, легированного ниобием, технологически сложны и экономически не оправданы. Основным приёмом вскрытия сборок ТВЭЛ и удаления оболочек является их резка с последующим выщелачиванием горючего /5/. Механическая резка применяется в настоящее время на заводе Уэст-Велли /6/.

На установках небольшой производительности перед резкой возможно производить выделение отдельных ТВЭЛ из сборок, для заводов с большой производительностью целесообразно после удаления концов сборок осуществлять резку всей сборки одновремённо.

Вторым перспективным методом удаления оболочек из нержавстали и циркония является метод оплавления /7/.

Сборка ТВЭЛ с окисным горючим без предварительной разделки нагревается до температуры 1670-1720°С, стальные детали при этом плавятся и отделяются от ядерного топлива, потеря которого составляет менее 0,05%. С топливом остается менее 0,5% стали. В процессе вскрытия происходит выделение некоторых летучих продуктов деления, главным образом благородных газов.

Выщелачивание горючего из нарезанных кусков ТВЭЛ может осуществляться в аппаратах - растворителях, куда куски поступают из контейнера,а после выщелачивания горючего обрезки оболочек удаляются из аппарата пневматически /5/.

Иное по конструкции решение задачи растворения горючего применяется на других заводах /6/. Нарезанные куски горючего загружаются в корзины, которые затем поступают в аппарат - растворитель, где горючее выщелачивается, а обрезки оболочек вместе с корзиной удаляются из аппарата.

В этих методах используются аппараты периодического действия, которые характеризуются невысокой производительностью. Для обогащённого ураном -235 или плутонием горючего представляют большой интерес аппараты - растворители непрерывного действия, в которых ядерная безопасность процесса сочетается с высокой производительностью.

Следует учитывать, что при растворении ТВЭЛ активной зоны из смеси окислов урана и плутония, изготовленных методом таблетирования, в азотной кислоте около 1% плутония остается в нерастворённом виде /8/. Этот остаток может быть отправлен на хранение или переработан отдельно другими методами, например, растворением в смеси азотной и плавиковой кислот. Однако, для работы с такими растворами требуется специальный материал для аппаратов.

ПОДГОТОВКА РАСТВОРОВ К ЭКСТРАКЦИИ

При высоком уровне радиации и кислотности исходного раствора практически весь плутоний и около 80% нептуния находятся в экстрагируемом ТБФ состоянии. Однако, исходный раствор перед экстракцией необходимо тщательно осветлять от мелких обрезков оболочки, кремнекислоты и графита, которые значительно осложняют процесс экстракции. Кремнекислота, меняя свои формы во времени и под влиянием температуры, склонна к образованию межфазных плёнок; графит легко флотируется растворителем (он находится в растворах, получаемых при растворении окисного горючего, изготавливаемого методом таблетирования). На процесс экстракции оказывают влияние продукты коррозии, имеющиеся в растворе, и примеси в применяемых реагентах. При растворении ТВЭЛ, облучённых до 100.000 мвт. сутки/т, до концентрации урана 300 г/л в осадок выпадает до 5% продуктов деления, в том числе цирконий, палладий, молибден, частично захватывающие U и Pu.

Ввиду указанных причин в экстракторах и коммуникациях накапливаются осадки, которые совместно с межфазными плёнками нарушают гидродинамику экстракции и приводят к остановкам процесса.

Кроме того, при взаимодействии продуктов деления (Zr , Pd и др.) с содержащимися в ТБФ продуктами радиолиза (МБФ. ДБФ, бутанол) также образуются осадки, способствующие образованию межфазных пленок. Применение центрифугирования с обычным числом оборотов не устраняет всех причин образования межфазных осадков, т.к. полной очистки раствора от мелко- дисперсных взвесей оно не дает, даже если раствор предварительно обработан коагулянтами (желатиной и др.).

ЭКСТРАКЦИОННАЯ ПЕРЕРАБОТКА ТВЭЛ РЕАКТОРОВ НА ТЕПЛОВЫХ НЕЙТРОНАХ

На ближайшие годы основным экстрагентом, используемым при экстракционной переработке облученного горючего, остается ТБФ. Из разбавителей в наших условиях наиболее устойчивым является додекан или сульфированный синтин (синтезированная смесь парафинов, содержащая 90% н-парафинов и 10% изопарафинов, с температурой кипения 170-270°).

Работами Багдасарьяна Х.С. и Барелко Е.В. показано, что образующиеся при контактировании ТБФ в сульфированном синтине с 3М HNO_3 при облучении дозой, равной 29,6 вт час/л, продукты радиолиза ТБФ более существенно могут влиять на процесс экстракции, чем продукты радиолиза сульфированного синтина, что видно из таблицы 2.

Таблица 2

Накопление продуктов радиолиза при облучении мощностью дозы 29,6 вт ч/л и контактировании с 3М HNO_3.

Реагент	молекул на 100 eV			
	нитросоединения	эфиры HNO_2	эфиры HNO_3	карбоновые кислоты
додекан	0	0	0,27	1,02
сульфирован. синтин	0,1	0	0,33	1,2
ТБФ в сульфир.синтине	0,23	0	0,21	1,14

По мнению авторов, в этих условиях количество образующихся нитросоединений за счёт радиолиза ТБФ соизмеримо или превышает количество нитросоединений, образующихся за счёт сульфированного синтина и тем более нормального додекана.

Облучая растворы, моделирующие переработку ТВЭЛ типа ВВЭР методом экстракции ТБФ в сульфированном синтине, авторы нашли, что при начальной дозе облучения, эквивалентной 5000 кюри/л, в течение часа не было обнаружено значительных осложнений на стадии экстракции. Непрерывный возврат органической фазы вплоть до интегральной дозы облучения 200 вт. ч/л подтвердил возможность продолжительной работы без особых затруднений, хотя влияние кислых продуктов радиолиза ТБФ на экстракцию Zr и Ru сказывается уже при начальной дозе 1 вт.ч/л.

Однако, накапливающиеся в органической фазе продукты нитрования - окисления существенно влияют на скорость расслаивания и вызывают образование весьма плотных эмульсий в конце кампании.

Увеличение дозы облучения до 10.000 кюри/л в течение часа, что соответствует условиям переработки ТВЭЛ быстрых реакторов с глубоким выгоранием и коротким временем охлаждения методом экстракции ТБФ в сульфированном синтине, приводит к образованию в растворе, содержащем до 200 г/л урана, плутоний и макропримеси, имитирующие количественно спектр продуктов деления, межфазных осадков и осадков в водной фазе. В составе осадков обнаружено до 30% Zr, значительные количества Pd; Mo в осадке не обнаружен. Процесс экстракции и разделения фаз в такой системе затруднен.

Суммируя имеющийся опыт по переработке ТВЭЛ методом экстракции, можно сделать вывод, что для ТБФ в н-додекане или разбавителе типа сульфированного синтина технологически возможен процесс при активности исходного водного раствора, не превышающей 5.10^3 - 6.10^3 кюри/кг урана, что приемлемо для растворов ТВЭЛ типа ВВЭР.

ПЕРЕРАБОТКА ТВЭЛ РЕАКТОРОВ НА БЫСТРЫХ НЕЙТРОНАХ (РБН).

Осуществление программы строительства РБН, как это намечено, например, для реактора типа БН-350, будет проходить через стадию работы реактора в режиме реактора -

конвертора (горючее - на основе обогащённой по U^{235} до 20% двуокиси урана) и реактора - размножителя, который будет работать на смешанном уран - плутониевом топливе. В будущем возможен переход на ТВЭЛ, имеющих в качестве горючего карбиды.

В химической переработке ТВЭЛ, по -видимому , следует различать также два этапа.

На первом этапе ТВЭЛ реакторов - конверторов будут перерабатываться на уже действующих установках по переработке ТВЭЛ реакторов на тепловых нейтронах. Это подтверждается и масштабом переработки. На каждый млн киловатт электрической мощности реакторов на быстрых нейтронах на химическую переработку будет поступать в год 6-8 т ТВЭЛ активной зоны и 20-25 т зоны экрана.

При переработке горючего активной зоны на действующих установках можно рекомендовать следующие мероприятия:

1. Срок охлаждения ТВЭЛ принимать не менее 150 дней, что диктуется распадом U^{237}.

2. Снизить активность исходного раствора примерно в пять раз разбавлением раствора до концентрации урана ~60 г/л. Разбавление благотворно скажется на поведении в растворе макропримесей продуктов деления.

Облучённое горючее реакторов - размножителей, вследствие высокого содержания плутония в исходном материале (горючее содержит обеднённый уран и до 20% плутония) перерабатывать на действующих установках будет затруднительно.

Требование быстрого возврата плутония не позволит увеличить срок охлаждения ТВЭЛ, тем более, что наличие U^{237} не лимитирует этот срок, т.к. изготовление ТВЭЛ будет организовано дистанционно.

Возможные пути решения задачи переработки этих ТВЭЛ могут быть следующие:

1. Снижение времени пребывания органической фазы в зоне контакта с активным раствором. Кардинальное решение этого вопроса сводится к созданию экстракторов с малым временем контактирования фаз. В СССР, также как и в других странах, ведутся испытания центробежных экстракторов. Результаты работ обнадеживающие, однако придется приложить много усилий по созданию на основе этих центрифуг надёжной схемы экстракционного процесса.

2. Более простой и практически осуществимый без больших затрат путь - объединение при переработке горючего активной зоны и экрана, которые поступают на переработку при соотношении активная зона : экран = 1:3.

Разбавление раствора до концентрации урана 80 - 100 г/л понизит активность в 4 раза, что позволит работать в режимах переработки горючего реакторов на тепловых нейтронах.

3. Стремление резкого снижения активности растворов

ТВЭЛ РБН в голове процесса с помощью неорганических сорбентов, обладающих высокой ёмкостью и работающих в кислых средах, пока не показала удовлетворительных результатов.

4. Применение более устойчивых и технологически приемлемых фосфорорганических экстрагентов, содержащих фенильную группу, например, дигексилового эфира фенилфосфоновой кислоты - ДГФФ.

Розен А.М. и Николотова З.Н /I2/, Ревякин В.В. и др. /I0/ провели исследование экстракционных свойств этого экстрагента и показали, что:

а) ДГФФ экстрагирует уран несколько эффективнее, чем ТБФ (константа экстракции выше в 3 раза), а азотную кислоту примерно также, как и ТБФ,

б) коэффициент распределения для Pu (IУ) сравним с коэффициентом распределения Pu (IУ) для ТБФ, а для Pu (Ш) - выше, чем в случае с ТБФ,

в) значения коэффициентов распределения Zr и Ru несколько выше, чем для ТБФ, однако, учитывая более эффективную экстракцию урана ДГФФ, чем ТБФ, очистка от циркония должна быть на том же уровне, что и при экстракции ТБФ.

Авторами сделан вывод о возможности успешного использования ДГФФ для экстракционного отделения урана и плутония от продуктов деления.

Радиационная устойчивость ДГФФ в 3 раза выше, чем ТБФ.

Подобная работа была выполнена в США с экстрагентом сходной структуры – ди-н-бутилфенилфосфонатом – Д-н- БФФ /9/.

5. Более радиационно устойчивыми являются азотосодержащие органические экстрагенты, например, третичные амины. Их радиационная устойчивость выше устойчивости фосфорорганических экстрагентов на порядок. Использование третичных аминов для переработки ТВЭЛ активной зоны реакторов – размножителей со смешанным топливом (уран и плутоний) вызывает большой интерес.

Уран, применяемый в реакторах – размножителях, как в активной зоне, так и в экране, будет обедненным после диффузионного процесса. Запасы его достаточны и нет нужды в его быстрой рециркуляции в топливном цикле /II/.

Наши изыскания по экспресс – схеме выделения из [illegible] показывают реальную возможность отделения плутония от урана и продуктов деления за один цикл экстракции третичными аминами (смесь $C_{10}-C_{12}$) в разбавителе типа полиалкилбензола (ПАБ$^{x)}$), обладающими при концентрации ТАА 30% емкостью по плутонию = 18 г/л. Очистка Pu за один цикл

---

x) 99% ди-и три-пропилбензола и 1% моноизопропилбензола.

экстракции и осаждения оксалата плутония достигает 10^6, что вполне достаточно при дистанционном изготовлении ТВЭЛ. В случае необходимости полной очистки плутония от продуктов деления достаточно проведения второго цикла экстракции аминами /3/.

Рафинат, содержащий обедненный уран и продукты деления, можно хранить для снижения активности до приемлемого уровня, после чего уран можно извлекать известными экстракционными методами.

Бах Н.А., Медведовский В.И. и др. исследовали радиационные и экстракционные свойства третичных аминов (триоктиламин - ТОА), смесь триалкиламинов - ТАА $(C_{10}-C_{12})$ в ароматическом разбавителе (н-бутилбензол).

Установлено, что при мощности дозы до 50 $\frac{вт.ч}{л}$ коэффициенты распределения плутония остаются достаточно высокими, а реэкстракция его из органической фазы растворами уксусной кислоты протекает удовлетворительно, как при однократном, так и многократном (циклическом) использовании экстрагента. При дальнейшем увеличении дозы облучения в системе наблюдается уменьшение коэффициента распределения плутония и ухудшение его реэкстракции.

Коэффициент распределения продуктов деления (Zr и Ru) возрастает с увеличением дозы облучения, одновремённо ухудшается их реэкстракция с плутонием. Коэффициент распределения циркония и рутения не зависит от их концентрации в исходном растворе, а определяется только поглощенной экстрагентом энергией и не превышает 10^{-3}-10^{-2}.

Накапливающиеся в экстрагенте вторичные и первичные амины практически не оказывают влияния на экстракцию плутония и очистку его от урана.

При многократной оборачиваемости экстрагента не было замечено образования каких-либо эмульсий или осадков, а время расслаивания фаз практически не изменялось.

Однако при использовании в качестве разбавителя для третичных аминов смеси сульфированного синтина и октилового спирта в системе уже при дозе облучения 5-10 $\frac{\text{вт.ч.}}{\text{л}}$ образуются продукты разложения, резко снижающие экстракцию плутония, по-видимому, переводя его в 3-х валентное состояние.

ПОВЕДЕНИЕ НЕКОТОРЫХ ПРОДУКТОВ ДЕЛЕНИЯ В ПРОЦЕССЕ ЭКСТРАКЦИИ

Глубокое выгорание горючего связано с накоплением в нём значительных количеств стабильных и радиоактивных изотопов, их количественный рост связан также с изменением спектра.

Наличие в облучённых ТВЭЛ летучих продуктов деления Kr^{85}, J^{131} и трития усложняет аппаратурное оформление операций вскрытия и растворения сердечников. Очистка отходящих газов до санитарных норм потребует значительных усилий.

Беспокойство вызывает поведение J^{131}, который примерно на 70% экстрагируется ТБФ и аминами, причём практически не реэкстрагируется с ураном и плутонием, не вымывается из органической фазы при промывке её карбонатом натрия и дистилляции. Промывка органической фазы щелочью несколько увеличивает удаление йода. Возможно, придётся выводить из процесса растворитель на срок, определяемый временем распада J^{131}. Однако, эта операция потребует дополнительных ёмкостей для хранения растворов, что несколько удорожает топливный цикл.

Хотя в топливе реакторов на быстрых нейтронах может накапливаться Zr до 6,5 кг/т урана, доля радиоактивного циркония в общем спектре продуктов деления снизится. Поэтому очистка урана и плутония от радиоактивного циркония не представит больших, чем в настоящее время трудностей. Наряду с радиоактивным цирконием в растворе будет находиться значительное количество стабильного изотопа. Основное беспокойство как о стабильном, так и о радиоактивном цирконии будет вызываться тем, что он будет давать с продуктами радиолиза соединения, образующие межфазные осадки.

Доля рутения в общем спектре продуктов деления, наоборот, резко возрастает. Если учесть, что в процессе экстракционной переработки горючего в настоящее время наибольшую трудность представляет очистка урана и плутония от рутения, то при переработке горючего с глубоким выгоранием эти трудности увеличатся.

При переработке горючего с высоким выгоранием возможны осложнения процесса экстракции, связанные и с присутствием в растворах палладия, который накапливается в ТВЭЛ РБН до 5 кг/тн.

Работой, выполненной Луничкиной К.П., Ренардом Э.В. и др. показано, что палладий удовлетворительно экстрагируется из нитратной среды (HNO_3,$NaNO_3$) растворами ТБФ, ДАМФК (диизоамиловый эфир метилфосфоновой кислоты), ТОА, Д2ЭГФК (ди-(2- этилгексил) фосфорная кислота).
Коэффициенты распределения палладия в системах: 25% ТБФ - - н.декан - 0,5 М HNO_3 ; 10% ТОА - диэтилбензол - 2 М HNO_3; 40% Д2ЭГФК - диэтилбензол - 0,05 М HNO_3 - 0,5 М $NaNO_3$ составляют соответственно ~0,3 ; ~ 1,3 и ~ 4,5.

Экстракция палладия возрастает с уменьшением кислотности водной фазы, уменьшением концентрации экстрагируемых актинидов и палладия в системе, увеличением концентрации NO_3^- - ионов в водной фазе и в ряду экстрагентов: ТБФ < < Д2ЭГФК < ДАМФК < ТОА. В условиях относительно высокой кислотности водной фазы и при высоком насыщении ураном органической фазы, т.к. при экстракционной (ТБФ) переработке растворов облучённого горючего экстракция палладия будет практически подавлена.

В случае экстракции плутония аминами очистка его от палладия будет затруднена из-за высокой экстрагируемости палладия. Экстракцию палладия в ТБФ и ТОА подавляют комплексообразователи (щавелевая кислота, трилон Б, ДТПА) при введении их в водный раствор.

Перешедший в органическую фазу палладий легко восстанавливается спиртами (бутиловый, изоамиловый, октиловый) до металла, являясь, возможно, одной из причин образования межфазных плёнок.

Реэкстракцию палладия из органических растворов можно осуществить слабокислыми растворами комплексонов, перекисью водорода (содовый или кислый раствор).

Наличие палладия не влияет на получение плутония в 4-х валентном состоянии.

В режиме экстракции трехвалентных редких земель и актинидов из слабокислых высокосолевых рафинатов I-го цикла будет извлекаться и палладий.

ЛИТЕРАТУРА

I. J.Morokhov. L E'nergie Atomique en URSS, E'nergie Nucleaire, vol.10, N7, 1968.

2. Доклад 28/р/305 на 3 Женевской конференции по мирному использованию атомной энергии.

3. Шевченко В.Б.,Борисов Л.М. и др. „Особенности регенерации ядерного горючего ТВЭЛ реакторов на быстрых нейтронах" Доклад на симпозиуме СЭВ, I968 г., Карловы - Вары.

4. В. Оксенфельд. Переработка ТВЭЛ быстрых реакторов - размножителей. Atomvirtschaft, № 2, 8/9, I968.

5. Шевченко В.Б., Повицкий Н.С., Соловкин А.С., Доклад на 2 Женевской конференции, I5/р/2I82.

6. Т.Крамер. Первый коммерческий завод по регенерации ядерного горючего. Nucleonics, Dec.I966, pp 48-52.

7. Г.П. Новосёлов, А.Т. Агеенков „Термический метод удаления стальных оболочек с окисных ТВЭЛОВ", Атомная энергия , 26,3 (I969), стр. 230.

8. Шевченко В.Б., Л.М. Борисов и др. Доклад на конференции в Брюсселе, март I967 г, SM-88/6I

9. Reactor Fuel Processing, № I, I959

I0. Ревякин В.В. и др., ЖНХ, ХШ, № 2, I968 г.

II. А.П. Александров, Атомная энергетика и её роль в техническом прогрессе. Генеральный адрес на открытии УП конгресса МИРЭК, журнал „Наука и жизнь" № II,I968.

I2. Розен А.М, Николотова З.И., Радиохимия 7 , № 2,577, I965.

В.Шевченко

THE CHEMICAL PROCESSING OF HIGHLY IRRADIATED FUELS

by

Maurizio Zifferero
Comitato Nazionale per l'Energia Nucleare
Rome - Italy

The problem of reprocessing highly irradiated fuels is today largely associated with the fast reactor fuel cycle, even if other types of fuels exist (the family of high temperature gas reactor fuels) which in principle should request attention for analogous reasons.

Experience in the aqueous processing of fast reactor fuels is still very limited and appears to be concentrated in UK and in France since these two countries have made a timely effort in this direction and are operating pilot plants to process the fuel discharged from their experimental fast reactors. Obviously this experience is very valuable and will assist in isolating areas needing further research and developments, bearing in mind the fact that experimental fast reactors in operation do not yet achieve the fuel performances anticipated for the future fast breeder power plants.

Assessing problems and difficulties to be met with the processing of these highly rated fuels of the future is also an exercise of speculation which keeps busy many people in different countries and organizations involved in fast reactor programs: at present we in Italy belong to this phylum but a limited experimental program is under way as we shall see later.

Thermal versus fast fuels: consequences of fuel rating

"Highly irradiated" is a more accurate definition than "high burnup" fuels and the Agency should be commended for having chosen the appropriate term in convening this Panel. In fact reprocessing experience acquired with natural uranium or light water reactor fuels has accustomed reprocessing technologists to correlate fission products activity with fuel burnup. This is justified by the fact that a relatively long cooling period is allowed for and the specific power density of today reactors is limited.

This situation is however changing and increasing importance in evaluating f.p. activity must be attributed to the specific power density even in the case of the LWR fuels of more advanced design. FBR fuels in addition must reduce to a very minimum the out-of-pile fuel cycle time to save on the interest of working capital. Therefore a pressure exists to shorten every step including the cooling period before processing.

Present values and target values for LWR and FBR principal irradiation parameters are compared in Table I to give order to magnitude figures. These data indicate that core power density in FBR is expected to be 4 to 5 times greater than in future LWR and therefore almost an order of magnitude higher of today's LWR. The corresponding increase in burnup is not as impressive.

What the effect of this situation is on fission products activities in the spent fuel is shown in Table II for FBR and in Table III for LWR.

It can be verified from Table II (circled figures) that f.p. activity in a fuel discharged after an exposure of 50,000 MWd/t is 45% higher than the activity of a fuel discharged after 100,000 MWd/t at half as much power density.
Furthermore the effect of exposure on f.p. activity is increasingly less significant when the cooling time is shortened.

Data of Table III also indicate that, for LWR, commercial reprocessing plant can expect in the early future a threefold increase at maximum of the specific activity level they are handling today.

Key features of FBR fuels reprocessing

Usually advocates of non aqueous processing stop their analysis at this point and start evaluating the consequences of such activity levels on organic solvents degradation, fission products insolubility, plutonium valence state, just to mention a few.

Table I

Present value and target value for LWR and FBR fuel irradiation parameters

	LWR[1]		FBR	
	now	target	now	target
Core power density (kW/kg of fuel)	15	30-40	~100	150-200
Burn-up (MWd/t)	15-20,000	~40,000	35-50,000	100,000
Cooling time (days)	>120	100-120	90	30(?)-60

[1] Average PWR-BWR

Table II

Effect of specific power density, burnup and cooling time on f.p. activity (Watts/kg of fuel)[1]

	50,000 MWd/t			100,000 MWd/t		
days of cooling	60	90	160	60	90	160
at 100 kW/kg	89	68	42	99	77	51
at 200 kW/kg	149	111	66	177	136	87

---

[1] Calculated by Phoebe ORNL code

Table III

F.P. activities (in Watts/kg of fuel) in LWR fuels

	Today	Future values
Core power density (in kW/kg)	15	30-40
b.u. (MWd/t)	20,000	35-40,000
F.P. activity: (in Watts/kg)		
- after 90 days	12	27-35
- after 160 days	8,5	19-25

Table IV

Relevant reprocessing data for a typical FBR power plant(1)

	Case a	Case b
Average power density (kW /kg of fuel)	70	32
Average b.u. (MWd/t)	41,000	19,000
Average f.p. activity in Watt/kg after:		
- 60 days	98	44
- 90 days	75	34
- 160 days	54	24

---

(1) case a : processing together core + axial blanket
case b : processing together core + axial + radial blanket

Table V

Chemical composition of FBR power plant fuel following case a and b [1]

Annual discharge:	case a	case b
Total U (in kg of UO_2)	14,120	36,346
Total Pu (in kg of PuO_2)	1,885	2,090
F.P. (in kg)	734	754
w/o Pu in the fuel (average)	11.2	5.35

[1] case a: processing together core + axial blanket
case b: processing together core + axial + radial blanket

From this analysis we can conclude the following:

- future processing of FBR plant fuels will be less difficult if core and blanket element are treated at the same time and will approach the nature and the extent of the difficulties involved in reprocessing future LWR fuels;
- shortening cooling time below 60 days from discharge may substantially increase the problems and, therefore, the costs of reprocessing operations. A detailed analysis of the expected cost increase vs cooling time reduction has to be made and must be supplied to economists. In turn this increase should be balanced against savings in working capital interest.

Another important point is the choice of a model for FBR fuel reprocessing: should one try to adapt existing reprocessing plants or should one start developing "ad hoc" facilities, optimized on fast fuels? This basic option will likely shape the research and development program and should therefore be taken at the beginning. Our opinion is in favour of using existing facilities until enough reprocessing services are needed to justify a large central plant specifically designed and optimized for fast fuels. But, of course, this is a matter of distant future.

Technical aspects of FBR fuels reprocessing

Lists of anticipated problems in fast fuel processing have been reviewed by many authors recently and papers contributed to this Panel will provide an up-to-date reference to this literature. Many of these problems will be shared by LWR fuels of advanced design. Some of them however will be typical of fast reactors and therefore deserve priority.

Prior to the dissolution and to the benefit of dilution with the blanket material the fast fuel assembly with its high heat release rate creates problems with transport, removal of transport cask coolant (if different from water), mechanical disassembling and shearing of fuel pins. The closely packed geometry and large heat evolution will adversely effect the possibility of air cooling during shearing operations and will cause high temperatures in the shear feed system. Possible solutions to overcome this difficulty are an automatic high speed pin-by-pin chopper, or interspersing blanket pins with core pins and shearing the resulting mixed bundle. In either way a disassembling operation is necessary and expensive hot cell type work and installations could be needed.

Symmetrically to head end, tail end operations on fast fuels ask for special attention. In this phase plutonium eventually

gathers in large quantities: at the same processing rates of LWR the plutonium quantities involved would be 10 to 20 times higher. Apart from criticality this calls for a revision of processing equipment and storage capacity. Furthermore as pointed out by many authors the plutonium product will require shielding and a remote refabrication.
Also the uranium side of the tail end offers problems since short cooled fuels will contain enough U-237 to require a shielded storage and allow this 6.75 days half life nuclide to decay.

Head ends and tail end operations are therefore the key, cost intensive steps requiring modifications in existing aqueous reprocessing plants to suit fast fuel processing. Actually the widely quoted report by Nicholson on NFS amenability to process FBR fuels includes a gross cost estimate where the main items refer to head end and tail end equipment and cell modifications.

A third problem mostly relevant to FBR fuel processing is the release of iodine 131 during fuel dissolution. As everyone knows the extent of the problem strongly depends on the cooling period. For very short cooled fuels (30 days) the need will arise inevitably for a special and separate treatment in order to remove this isotope (and possibly Xe, Kr and H isotopes) since the quantities involved differ for orders of magnitude from those handled today in processing plants.

Table VI compares the iodine-131 content per ton of fuel in different cases. With fast fuels, even assuming a relatively high cooling time (60 days) and processing in the highest dilution, a normal 1 ton per day operation would result in the release to the off gas system of 7500 Ci of iodine against the 1.8 Ci of LWR fuel.

Ordinarily health and safety regulations allow to discharge very limited amounts of iodine through the stack; the order of magnitude being 100 Ci/day. In particular cases this figure can reach the millicurie. With ordinary LWR fuels this implies a scrubbing efficiency for iodine in the off gas system of 99.9 to 99.99%. With future FBR fuels unless specifications are relaxed this efficiency should be increased by a factor of a thousand and this is not going to be an easy job.

The problems associated with the other gaseous fission products are comparatively lower with the possible exception of Xe-133 in short cooled fuels.

In our opinion the Oak Ridge approach of dry oxidation of UO_2 to U_3O_8 to favor the release of gaseous products prior to dissolution and facilitate their processing or storage .sounds very interesting and could be the only way in the long range to overcome many troubles. In the short range existing processing plant

Table VI

Iodine - 131 content (in Ci/t of fuel) in different cases[1]

	$Ci-I^{131}/t$
FBR active core:	
- 30 days of cooling	2.4×10^5
- 60 days of cooling	1.8×10^4
- 150 days of cooling	8
FBR core + blankets:	
- 30 days of cooling	9.8×10^4
- 60 days of cooling	7.5×10^3
- 150 days of cooling	3.4
LWR - 150 days of cooling	1.8

---

[1] FBR reference fuel is the same assumed in case a and b of table 4 and 5

can cope with this problem only by extending the cooling period of the fuel.

Other secondary consequences of the high fission products concentration are often mentioned but it is generally felt that they are not such as to impair solvent extraction processes.

Solvent stability to radiation damage, presence of insoluble fission product noble metals, plutonium IV reduction (if a plutonium partition is needed) are the main recurring items of concern. No doubt, these points represent areas of future research and development on flowsheets and equipment design; but we attribute a great importance to the encouraging results which were reported at the Dounreay and La Hague pilot plants.

After so many negative consequences a word should be spent on possible positive consequences due to high irradiation levels. Since plutonium is going to be refabricated remotely and mixed with uranium, emphasis on uranium-plutonium separation in the plutonium stream and on high decontamination factors on plutonium product is likely to be decreased. This fact is bound to effect favorably the plutonium partitioning step and, possibly, in the long range the number of extraction cycles.

CNEN programs and activities related to highly irradiated fuels processing

A program of research and development on fast reactors is under way in Italy.

For the purposes of this Panel the objectives of our activities can be summarized as follows:

- an experimental program based on the design, construction and operation of a fast flux testing reactor (P.E.C.) supplied with three separate closed loops suitable for irradiation testing of fast reactor fuel assemblies. The anticipated thermal power will be around 140 MW at an average loop flux of 3×10^{15}. The driver fuel is enriched ($\sim$30%) uranium oxide with an axial blanket of natural uranium oxide. The reactor fuel loading is approximately 1 ton.
  Detailed design is under way and the construction should start before the end of this year at the selected site, approx. 30 mi south of Bologna. The first irradiated fuel should be unloaded not earlier than 1975
- a technical and economical study on a large prototype fast reactor coupled with an experimental program based on the development of fast reactor fuels.
  No decision has been taken so far on the construction schedule of the prototype. Our hypothesis are based on the possibility of having such large a reactor on line after 1980.

Summary and Recommendations of the Panel on Reprocessing of Highly Irradiated Fuels to the IAEA

1. The Panel placed the main emphasis on the reprocessing of irradiated fuels from fast reactors. Some consideration was also given to fuel from advanced types of thermal reactors including HTGR. It appears that the major reprocessing problems of HTGR fuels will be associated with the head-end operation, whilst existing solvent extraction technology is adequate for remainder of process.

2. The Panel was of the opinion that despite the problems listed below, aqueous reprocessing methods are feasible for fast reactor fuels, even at short cooling periods. The Panel noted that so far such methods have generally proved themselves very reliable, and that this will be one important advantage to avoid delays in reprocessing at a time of plutonium scarcity.

3. In the near future, when fast reactors are few in number and long cooling is possible because plutonium is in abundant supply, it is likely that reprocessing can be carried out largely in existing plants with only limited modifications affecting head-end and tail-end. Later it will presumably be necessary to build new reprocessing plants, one of whose main functions will be to deal with short-cooled fast reactor fuels.

4. In processing fast reactor fuels, a number of problems become significant, which are less important in existing thermal fuel reprocessing plants. The following problems may arise with highly irradiated fuels irrespective of its cooling period.

(i) The possibility of sodium being present in the fuel;

(ii) The effect of high plutonium concentrations on the chemistry;

(iii) Criticality and accountability problems arising from high plutonium concentrations;

(iv) The behaviour of fission products at high (chemical) concentrations;

(v) The formation of insoluble fission product inclusions in the fuels, affecting feed clarification and the recovery of fissile material;

(vi) The control of gaseous radioactive fission products;

(vii) The need for high recoveries of plutonium in the fuel cycle as a whole;

(viii) Solvent and diluent degradation problems with effects on fission product decontamination, formation of precipitates and losses of fissile material.

In addition the following problems become severe at short cooling periods:

i) The control of short-lived volatile fission products (I^{131}, Xe isotopes);

ii) Heat release in the fuel, which is significant in transportation, fuel storage, the head-end part of a reprocessing plant and highly active waste management.

iii) Increased solvent and diluent degradation.

5. As noted above, none of these problems are expected to introduce any insuperable technical difficulties into aqueous reprocessing but the consequent costs have yet to be assessed.

The use of amines to remove the plutonium and purify it immediately, leaving the uranium and fission products to age before separation by tributyl phosphate was considered to be worthy of further study.

6. The Panel also gave attention to alternative non-aqueous processes, such as fluoride volatility, molten salt extraction and molten alloy decladding.

The relative advantages claimed for the fluoride volatility approach have diminished in view of the progress of solvent extraction technology and the reduced interest in the recovery and re-enrichment of the depleted uranium. The opinion of the Panel regarding the volatility process is that it may offer a potential advantage in the case of controlling gaseous fission products and in simplifying highly active waste solidification, especially if it were necessary to reduce drastically the cooling time. These advantages must in turn be weighed against the problem of quantitative plutonium recovery which is as yet to be solved.

Only limited quantities of irradiated fuel unloaded from a fast reactor are therefore expected in the early future. The reprocessing need of the PEC reactor will amount to some 500 kg per year of enriched uranium oxide at an expected b.u. of 60,000 MWd/t.
If we base our evaluation on the hypothesis that a large prototype will be in operation fifteen years from now the need will arise to process an yearly average of ten tons of core + axial blanket fuel to which additional five to ten tons of radial blanket fuel (depending on the rate of discharge) should be added. In terms of fissile material these figures correspond to the processing of around 700 kg per year. The average b.u. of the core + axial blanket fuel should be around 50,000 MWd/t.

Two experimental reprocessing plants are approaching the operation stage in Italy: EUREX and PCUT; originally meant for highly enriched uranium fuel EUREX has been progressively adapted for the experimental processing of a large variety of fuels including power reactor fuels. Recent additions to this plant include a shearing machine and a plutonium tail end. PCUT plant has been conceived for Th-U fuels and involves a remote fabrication facility.
Although no decision has been taken where to send irradiated PEC fuels my personal opinion is that EUREX is very appropriate for this job.
A research program is under way at Casaccia to determine optimal process condition in view of this possibility.

It might be worth mentioning that a large program of research and development on typical problems related to fast reactor fuel processing will be included in CNEN third quinquennial program, due to start in 1970. This program is now in the brainstorming stage and will cover such items as head end and tail end process development, iodine removal, plutonium and transplutonium chemistry, high speed contactors and waste conditioning. This Panel is for us therefore a very timely occasion to confront points of view and to listen to foreign experience.

The other processes were at an early stage of development and their technical and economic viability could not be assessed.

Recommendations to the Agency

1. The Panel recommend that a detailed analysis be carried out on specific problems connected with very short-cooled fuel transportation in relation to existing regulations.

2. The problem associated with the radioactive wastes produced in plant operation should similarly be assessed. In particular this refers to highly active liquid and solid wastes, low active liquid effluents and gaseous wastes. In this assessment particular emphasis should be placed on I^{131}, Xe^{133}, Kr^{85} and H^{3}.

3. In view of the present state of development, the Panel did not consider it appropriate to make a quantitative statement on the cost of fast breeder reactor fuel processing relative to those of thermal fuels, nor on the economic consequences of reducing the cooling time.
It is suggested, however, that on this aspect a fruitful meeting could be held in the future.

4. Some specific areas which deserve priority and could be the subject of Agency sponsored research activities include:

   - Basic aspects of head-end processes such as the control during head-end operations of gaseous fission products;

   - Plutonium process chemistry and in particular those problems associated with the high concentration of plutonium in fast reactor fuels;

   - Chemistry of fission products in macro amounts in process conditions.

LIST OF PARTICIPANTS

J. SAUTERON	Chef des services de chimie des combustibles irradiée C.E.A. Fontenay-aux-Roses B.P. No.6, France
N. SRINIVASAN	Head, Reprocessing Division Bhabha Atomic Research Centre Trombay, Bombay-74, India
M. ZIFFERERO	Deputy Director, Nuclear Research Section, CNEN Viale Regina Margherita 125, Rome, Italy
K. NAITO	Department of Nuclear Engineering Faculty of Engineering, Nagoya University Furo-cho, Chikusa-ku, Nagoya, Japan
W. SCHÜLLER	Technical Manager, Gesellschaft zur Wiederaufarbeitung von Kernbrennstoffen mbH (GWK) 7501 Leopoldshafen, Fed. Rep. of Germany
B.F. WARNER	Technical Manager, United Kingdom Atomic Energy Authority Production Group Windscale & Calder Works, Sellafield, Seascale, Cumberland, UK
J. BUCKHAM	Manager, Chemical Technology Branch, Idaho Nuclear Corporation, Idaho Falls, Idaho 83401, USA
V.B. CHEVCHENKO	Kurchatov Institute, Moscow, USSR

OBSERVERS

F. MARKUS	Atomic Energy Commission 29 Strandgade DK 1401 Copenhagen K, Denmark
R.C. de BEUKELAER	Belgonucléaire 35 Rue des Colonies, Brussels, Belgium
G. CALLERI	CNEN, Programma Eurex 13040 Saluggia (Vercelli), Italy

E. MERZ	Director, Institut für Chemische Technologie, Kernforschungsanlage Jülich GmbH 517 Jülich 1, Postfach 365, Fed. Rep. of Germany
H.L. DREISSIGACKER	Federal Ministry of Scientific Research 53 Bonn 9, Postfach 9124, Fed. Rep. of Germany
I. SUKEGAWA	Assistant Superintendent of Nuclear Fuel Metallurgy Department Mitsubishi Metal Mining Co. Ltd. No.6, 1-chome ohte-machi, Chiyoda-ku, Tokyo 100, Japan
S. SATO	Power Reactor & Nuclear Fuel Development Corp. 9-13, 1-chome Akasaka, Minato-ku, Tokyo, Japan
T. BARRET	UKAEA, Dounreay Experimental Reactor Establishment, Thurso, Caithness Scotland, UK
H.A.C. McKAY	UKAEA, Atomic Energy Research Establishment Harwell, Didcot, Berks., UK
C.M. NICHOLLS	UKAEA, Atomic Energy Research Establishment Harwell, Didcot, Berks., UK
J. COUTURE	C.E.A., Direction des Productions B.P. No.4, Chatillon S/Bagneux (92), France
G. KOCH	Institut für Heisse Chemie Kernforschungsanlage Karlsruhe 75 Karlsruhe, Postfach 3640, Fed. Rep. of Germany
J. MAMELLE	Chef du Service Nucléaire à Saint Gobain Techniques Nouvelles 23 boulevard George Clemenceau 92 Courbevoie, France
G. SCIBONA	CNEN, Viale Regina Margherita 125, Rome, Italy

REPRESENTATIVES

EURATOM

J. van CAENEGHEM	Direction Générale Recherche générale et technologie 51 rue Belliard, Bruxelles 4, Belgium
J.G. WURM	C.C.R. Euratom Ispra (Varese), Italy

ENEA

H. ESCHRICH	Head, Laboratory Department Eurochemic Company Mol, Belgium

Scientific Secretaries

Y. POLIKARPOV	Division of Nuclear Power and Reactors IAEA, Vienna
K. KOSTADINOV	Division of Nuclear Power and Reactors IAEA, Vienna