ANNEX XVI.

EVALUATION OF A SCENARIO OF TRANSITION TO TH/^{233}U FUEL CYCLE

XVI-1. INTRODUCTION

Task 1 of the INPRO SYNERGIES project focuses on assessing scenarios involving use of PHWR, LWR and FR reactor technologies using uranium and/or plutonium as main fissile content of the fuel. Its scope is also extended to analyze the scenario of using thorium-based fuel that may be introduced in the medium-term time frame, from 2030 to 2050. Among various scenario storylines, Scenario family D (see Section 2 of the report) envisages transition to thorium-^{233}U fuel cycle via use of uranium/plutonium in thermal and fast reactors. One of the storylines of the Scenario family D is similar in concept to the Indian three stage nuclear power programme. While results of a study considering storyline of the Scenario family D have been published [XVI-1], a parametric study was carried out to assess the effect of availability of fast reactors technologies using metallic fuel on transition to Thorium-^{233}U fuel cycle.

XVI-2. DESCRIPTION OF THE STORYLINE

As stated earlier, the storyline for this study is similar to India's three stage nuclear power programme. The three stage Indian nuclear power programme is aimed at efficient utilisation of limited natural uranium and extensive thorium reserves. The first stage comprises of use of uranium based fuel for power generation primarily in PHWRs. The power programme is expanded in the second stage through FBRs using plutonium based fuel using depleted/reprocessed uranium in the blanket having high breeding ratio, which serves to increase the fissile inventory available for breeding ^{233}U from thorium. Thorium is gradually introduced into the FBR blanket to breed ^{233}U. The third stage would use this ^{233}U along with thorium in a self-sustainable manner. These are shown graphically in Figure XVI-1.

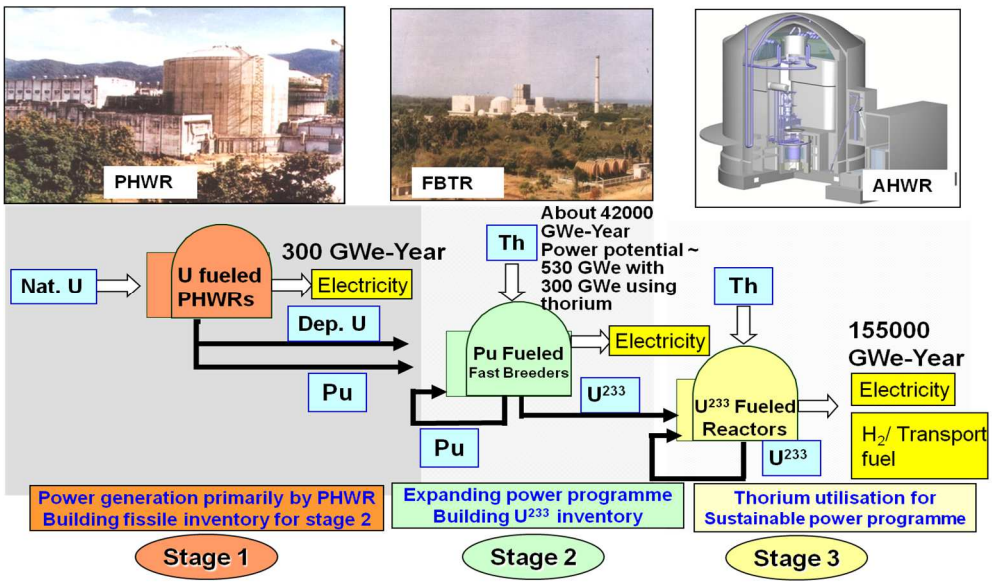

FIG. XVI-1. Overview of Indian three-stage nuclear programme.

It should be noted that the current study is only a case study and should neither be considered as a commitment of installation nor any statement of targets for India.

XVI-3. OBJECTIVE OF THE STUDY

It has already been established that the time of introduction of thorium is very important in achieving and sustaining the target power level. Use of thorium requires sufficient building up of fissile inventory. As use of metallic fuel in fast breeder reactor results in higher breeding ratio compared to use of oxide fuel, the availability of technology for using metallic fuel in fast breeder reactors along with its associated fuel cycle is essential for building up necessary fissile inventory at faster rate. This eventually plays vital role in transiting to thorium-^{233}U fuel cycle. The effect of availability of this technology on time of transition to the third stage using thorium-^{233}U fuel cycle has been assessed in this parametric study.

XVI-4. DESCRIPTION OF CASE STUDY SCENARIOS

Two scenarios have been assessed. Figure XVI-2 and Figure XVI-3 describe two storylines of two different scenarios viz. Case-A and Case-B.

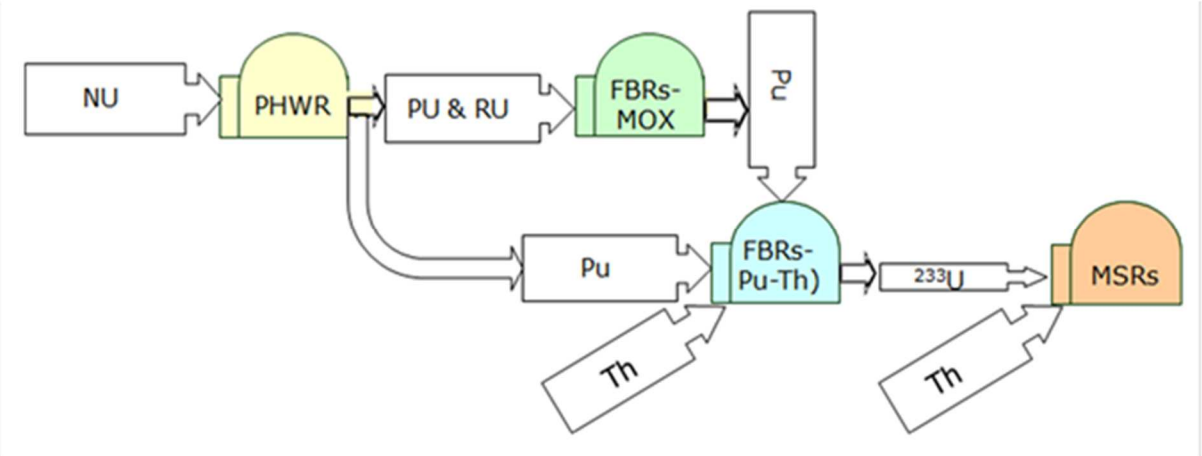

FIG XVI-2. Nuclear reactor chain configuration for Case-A.

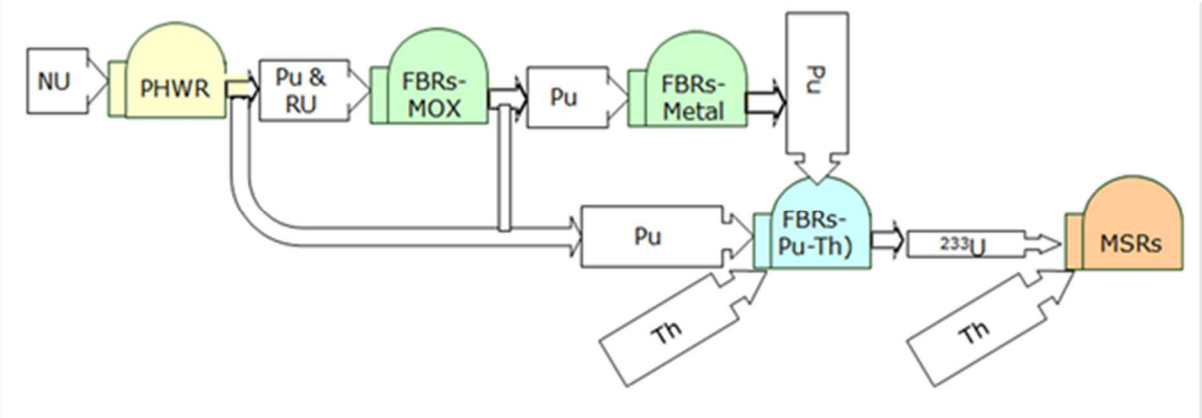

FIG XVI-2. Nuclear reactor chain configuration for Case-B.

As brought out in the Figures, the Case-B scenario envisages availability of technology for using metallic fuel in fast breeder reactors. The parameters considered for this case study are listed in Table XVI-1.

TABLE XVI-1. PARAMETERS FOR THE STUDY

Parameters		Case-A	Case-B
Material availability	Uranium	~60 000 tons	
	Thorium	~225 000 tons	
Preferential order of reactor installation		PHWRs (Nat. U) FBRs (Pu/U MOX) FBRs (Pu/Th metal) - not before 2041 MSRs - not before 2041	PHWRs (Nat. U) FBRs (Pu/U MOX) FBRs (Pu/U metal) - not before 2021 FBRs (Pu/Th) - not before 2041 MSRs- not before 2041
Time duration for return of spent fuel as refabricated fuel		1 year	
Material losses		1 %	

Material requirements reported in the INFCE document [XVI-2] for fast reactor systems have been considered for the study. The Pu/U metal fuelled FBRs have blankets containing thorium metal, with an overall breeding ratio of 1.58. The Pu/Th metal fuelled FBRs have thorium metal in the fertile blanket, with an overall breeding ratio of 1.3. The target power level has been assumed to be 1000 GW(e) for both the cases. It is assumed that the primary factor limiting the installation and commissioning of NPPs is ensuring the lifetime availability of nuclear material. Thus any limitation arising out of availability of non-fissile or non-fertile materials – including, among others, fuel clad material, structural material, fabrication infrastructure, etc. – are not taken into account.

XVI-5. TOOL USED FOR THE STUDY: TEPS

Tool for Energy Planning Studies (TEPS) has been designed for energy planning studies relevant for electricity producing nuclear reactor systems. The current version of TEPS can handle up to 20 reactor types and 20 material types and systematic upgrading is in progress for accommodating more. Within a typical nuclear energy system, there is no fundamental limit on the number of reactors that can be installed. The input to the code consists of metadata in which the overall information such as number of reactor types involved in the analysis, number of materials to be tracked, the target energy demand curve, material availability information, the user-defined reactor deployment priority and prior installation history (so as to be able to start an analysis from some well-defined point in time). The code additionally requires information on material requirements (annualised flows in the current version) for each of the nuclear reactor types that are going to be employed in the analysis. These flows contain, typically, the initial core requirements, annual reload requirements, annual discharges from the reactor and quantity that will be discharged at the time of decommissioning of the reactor. Further, the rated reactor power and lifetime load factor, the typical time for the reusable components from the spent fuel bay to the refabrication of fresh fuel, reprocessing losses, construction period and reactor lifetime are to be provided. The TEPS code utilises the information to calculate the material flows needed to achieve the target demand curve. In the event the target demand curve is non-commensurate with the material

availability information provided, TEPS will automatically readjust and calculate the maximum installations possible.

Fundamentally, TEPS is an optimisation code that tries to maximise reactor installations subject to material and priority constraints. The material flows provided as output by TEPS are completely user-specific and non-radiological (decay of radio-isotopes is not considered). The user specificity is useful when, for example, an user is interested in the obtaining the MA load arising out of a NES, he may track such MAs that are essential to his analysis. Similarly, a user analyzing the requirements for infrastructural materials may choose to monitor the amount of steel needed for a NES. The materials flows that need to be mandatorily tracked are for the fissile and fertile materials such as ^{233}U, ^{235}U, ^{238}U, plutonium and thorium. An interesting feature employed in TEPS is to account for lifetime requirements of material for a given reactor type. To consider this, TEPS employs a forward looking calculation that inhibits reactor installations that would result in negativity of material flow at some future point of time. It is emphasised here that the lifetime requirement of a reactor is not allocated at the outset, but merely the lifetime requirement is factored in as a constraint to the optimisation problem. Additional constraints can also be posed to the code using the construction period limits by formulating either a cap on the maximum reactors that can be constructed in the period or on the total number of reactors of any one kind.

TEPS has been benchmarked with IAEA tool NFCSS and was extensively employed for scenario analysis in the INPRO collaborative project GAINS [XVI-3].

XVI-6. RESULTS AND CONCLUSIONS

For the input parameters given in the section "Description of case study scenarios", computer code TEPS delivers the possible installed capacity for various reactor types with time. Figure XVI-4 shows installed capacities of various reactor systems with time.

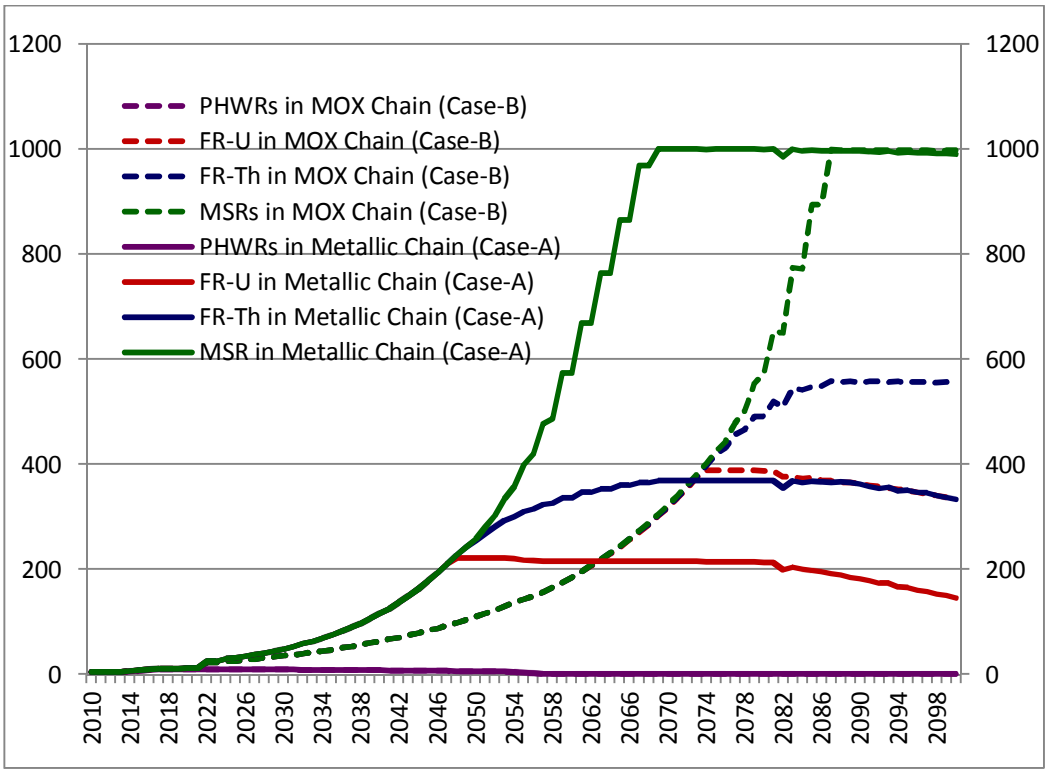

FIG. XVI-4. Calculated installed capacity with time.

It is seen from the figure that in the absence of availability of the technology for using metallic fuel in fast breeder reactors, the transition of introducing thorium in blankets of fast reactors is delayed by 14 years. For Case-A this transition is possible in the year 2062, while for Case-B it is possible in the year 2048. Moreover, the delay in achieving target power level of 1000 GW(e) is 18 years. The year in which target power level could be achieved is 2087 and 2069 for Case-A and Case-B, respectively.

Thus, the indicative assessment for the selected storyline of the Scenario family D confirms that FRs using metallic fuel have significant role in advancement of time period of transition to deployment of Th/^{233}U based reactors. Further it may noted that the key indicators shortlisted as a part of the SYNERGIES programme may not be adequate to compare these scenarios, since the time factor, essential in these results, is not considered.

REFERENCES TO ANNEX XVI

[XVI-1] INTERNATIONAL ATOMIC ENERGY AGENCY, Role of Thorium to supplement fuel cycles of future nuclear energy systems, IAEA Nuclear Energy Series No. NF-T-2.4, Vienna (2012)

[XVI-1] U.S. Contribution to the INFCE Working Group 5, Subgroup D, Alternate Fuel Cycles for Fast Breeder Reactors, INFCE (1979): http://www.iaea.org/inis/collection/NCLCollectionStore/_Public/11/538/11538891.pdf

[XVI-3] INTERNATIONAL ATOMIC ENERGY AGENCY, Framework for Assessing Dynamic Nuclear Energy Systems for Sustainability, Final Report of the INPRO Collaborative Project on Global Architectures of Innovative Nuclear Energy Systems with Thermal and Fast Reactors and a Closed Nuclear Fuel Cycle (GAINS), IAEA Nuclear Energy Series NP-T-1.14, Vienna (2013)