Clinical Dosimetry In Paediatric Imaging

Quality Assurance Reference Centre
North East, Yorkshire and The Humber

Keith Faulkner: QARC, Wallsend

Patient Dosimetry

Quality Assurance Reference Centre
North East, Yorkshire and The Humber

- Dosimetry protocols
- Age/size correction
- Typical dose levels

QUANTITIES FOR PATIENT DOSIMETRY

Quality Assurance Reference Centre
North East, Yorkshire and The Humber

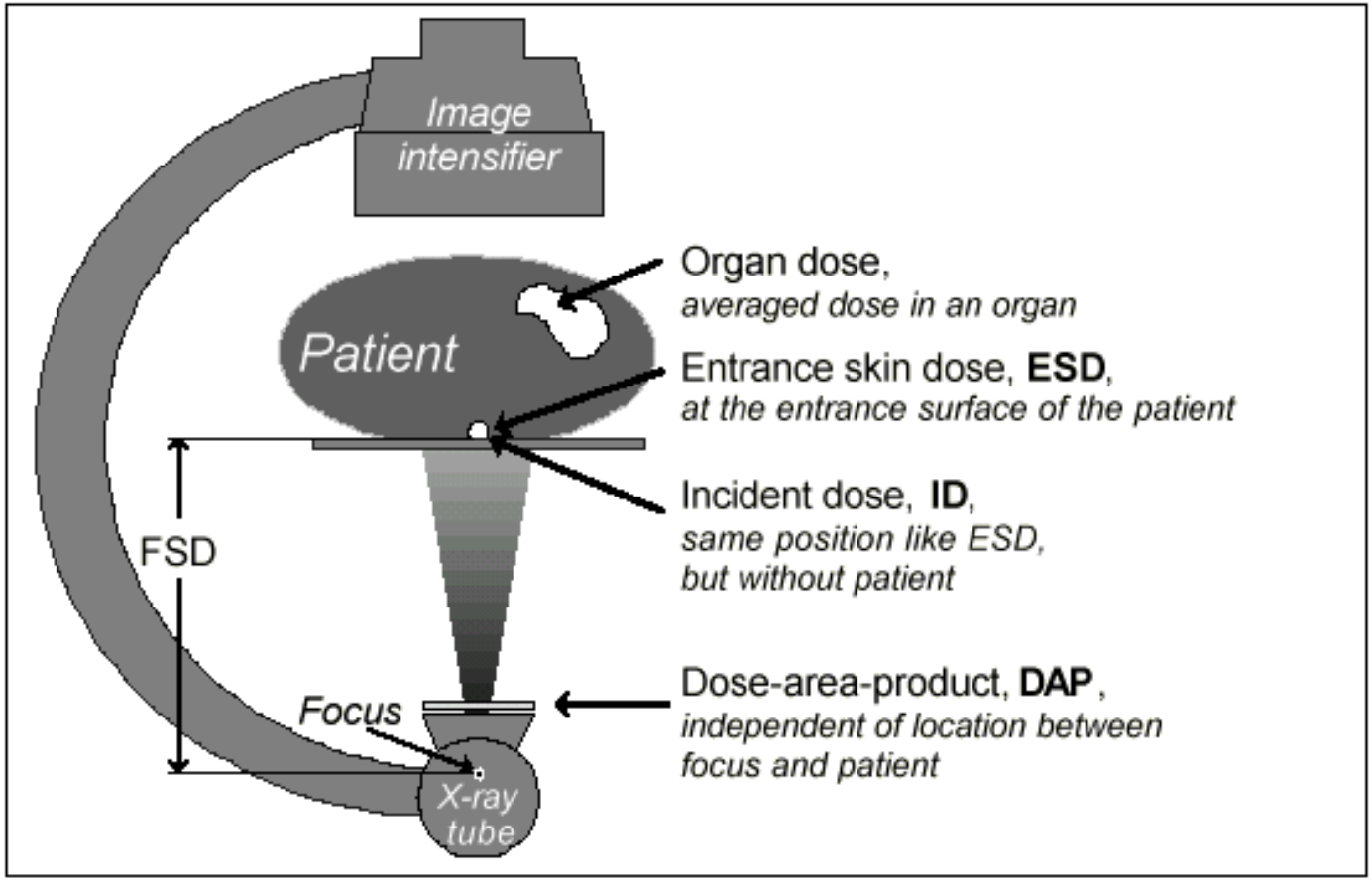

From: Avoidance of radiation injuries from interventional procedures. ICRP.

ABSORBED DOSE D

- The absorbed dose D, is the energy absorbed per unit of mass. This quantity is defined for all ionizing radiation (not only for electromagnetic radiation, as in the case of the “exposure”), and for any material.
- D = dE/dm. The SI unit is called Gray [Gy].
- 1 Gy = J/kg.
- The former unit was the “rad”. 1 Gy = 100 rad.

ENTRANCE SKIN DOSE

- The entrance skin dose (ESD) is the absorbed dose in the skin at a given location on the patient. It includes the backscattered radiation from the patient
- It can be measured directly with a dosemeter on the patient or by multiplying the Incident Dose (ID) with a backscatter factor (B).
- The magnitude of the ESD also increases as the FSD is reduced.

Measurement of entrance surface dose

Quality Assurance Reference Centre
North East, Yorkshire and The Humber

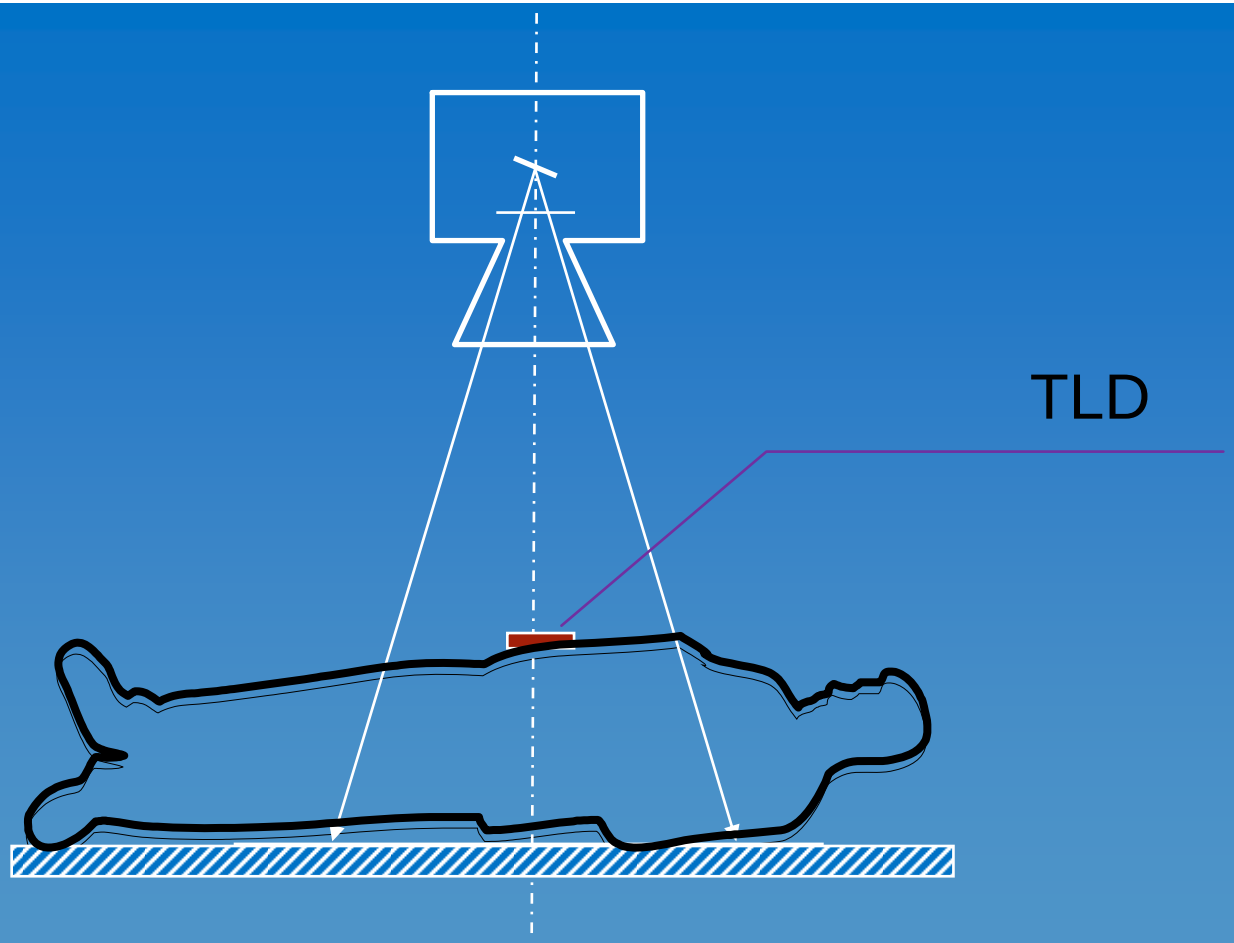

DOSE AREA PRODUCT

NHS
Quality Assurance Reference Centre
North East, Yorkshire and The Humber

- The dose-area-product (DAP) is the product of the incident dose and the area of the x-ray field. It can be determined at any convenient location between the x-ray source and the patient.
- The unit for DAP is Gy x cm^2.

Dose Area Product (DAP)

Quality Assurance Reference Centre
North East, Yorkshire and The Humber

Transmission ionization chamber

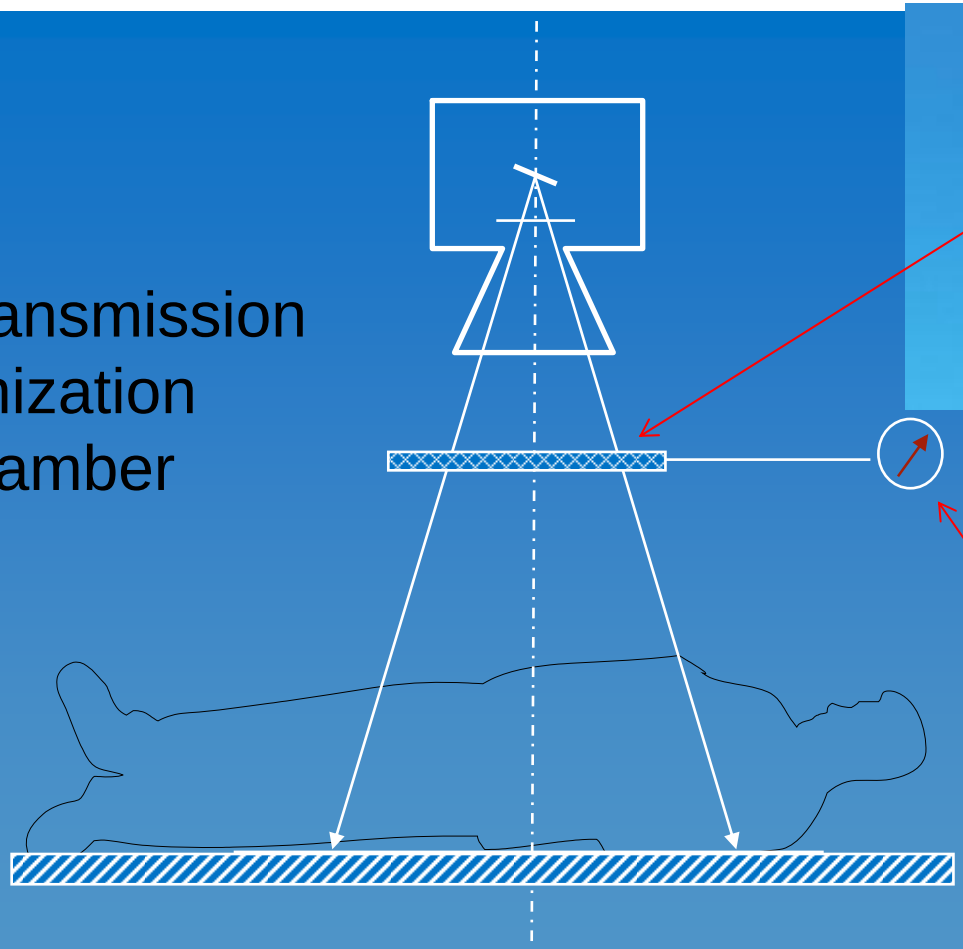

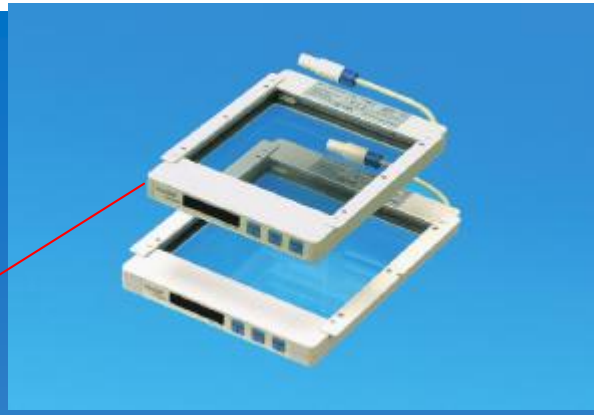

Dose Area Product (DAP)

Quality Assurance Reference Centre
North East, Yorkshire and The Humber

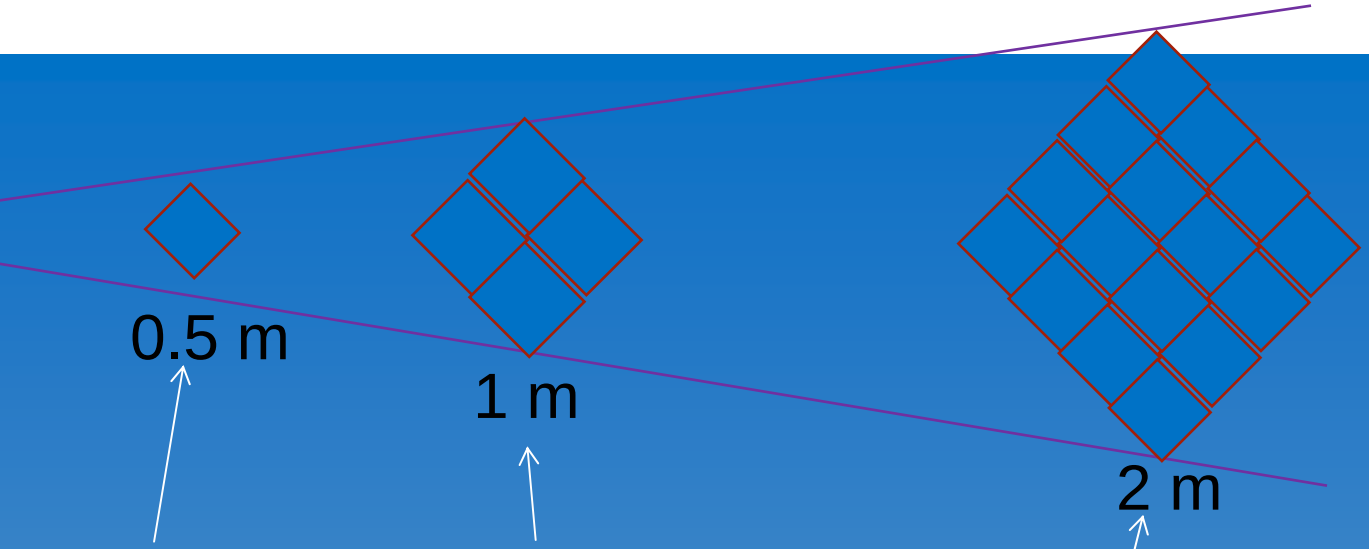

Air Kerma:	$40*10^3$ μGy	$10*10^3$ μGy	$2.5*10^3$ μGy
Area:	$2.5*10^{-3}$ m^2	$10*10^{-3}$ m^2	$40*10^{-3}$ m^2
Area exposure product	100 μGy m^2	100 μGy m^2	100 μGy m^2

Paediatric Dosimetry

Quality Assurance Reference Centre
North East, Yorkshire and The Humber

- Data on paediatric doses are very difficult to analyse, because the height and weight of children is very dependent on age.
- In addition, it is inappropriate to use effective dose to quantify patient dose levels for paediatric and neonatal radiology.
- Patient size varies during childhood

Paediatric Dosimetry: Size Correction

- In order to compare centres, an agreement was reached within the European Union to collect data for five standard ages, i.e. for newborn, 1-year-old, 5-year-old, 10-year-old and 15-year-old children.
- An alternative approach is to apply a height and weight conversion factor to allow for deviation in size and composition from that of reference man . Correcting for patient size was first proposed by Lindskoug and has been further developed by Chapple et al. It enables reference values to be obtained from large-scale patient dose surveys by correcting each individual dose quantity to what it would have been had the individual corresponded to the size and composition of reference man.

Mean ESD per radiograph Abdomen AP Examinations

Quality Assurance Reference Centre
North East, Yorkshire and The Humber

Age (years)	Mean ESD (μGy)
0	110
1	340
5	590
10	860
15	2 010

Hart et al 2002

Mean ESD per radiograph Chest AP/PA Examinations

Quality Assurance Reference Centre
North East, Yorkshire and The Humber

Age (years)	Mean ESD (μGy)
0	60
1	80
5	110
10	70
15	110

Hart et al 2002

Mean ESD per radiograph Barium Meal Examinations

Quality Assurance Reference Centre
North East, Yorkshire and The Humber

Age (years)	Normalized DAP per examination (mGy cm^2)
0	760
1	1 610
5	1 620
10	3 190
15	5 670

Hart et al 2002

Effective dose for seven selected paediatric cardiac interventions

Quality Assurance Reference Centre
North East, Yorkshire and The Humber

Procedure	Number	Effective dose (mSv)
ASD occlusion	259	3.88
PDA occlusion	165	3.21
Balloon dilation	122	4.4
Coil embolization	33	4.58
VSD occlusion	32	12.1
Atrial septostomy	25	3.62
PFO occlusion	21	2.16

ASD = atrial septal defect; PDA = patent ductus; VSD = ventricular septal defect; PFO = patent foramen ovale

Onnasch et al BJR 2007.

Summary

- Most survey data reported in the scientific literature was obtained from a small sample of centres, consequently these values may not be representative of practice . Centres are encouraged to perform their own surveys
- Whilst it is inappropriate to use effective dose in paediatric dosimetry, many authors do
- Patient size correction a problem; age bands are not an ideal approach (patient height and weight vary across countries)