IAEA

INTERNATIONAL ATOMIC ENERGY AGENCY

Boiling Water Reactor Simulator

Workshop Material

Second Edition

VIENNA, 2005

TRAINING COURSE SERIES 23

TRAINING COURSE SERIES No. 23

Boiling Water Reactor Simulator

Workshop Material

Second Edition

INTERNATIONAL ATOMIC ENERGY AGENCY, 2005

The originating Section of this publication in the IAEA was:

Nuclear Power Technology Development Section
International Atomic Energy Agency
Wagramer Strasse 5
P.O. Box 100
A-1400 Vienna, Austria

BOILING WATER REACTOR SIMULATOR
IAEA, VIENNA, 2005
IAEA-TCS-23/02
ISSN 1018–5518

© IAEA 2005

Printed by the IAEA in Austria
September 2005

FOREWORD

The International Atomic Energy Agency (IAEA) has established an activity in nuclear reactor simulation computer programs to assist its Member States in education. The objective is to provide, for a variety of advanced reactor types, insight and practice in their operational characteristics and their response to perturbations and accident situations. To achieve this, the IAEA arranges for the development and distribution of simulation programs and workshop material and sponsors workshops. The workshops are in two parts: techniques and tools for reactor simulator development, and the use of reactor simulators in education. Workshop material for the first part is covered in the IAEA publication: Training Course Series No. 12, Reactor Simulator Development: Workshop Material (2001). Course material for workshops using a WWER-1000 simulator from the Moscow Engineering and Physics Institute, Russian Federation is presented in the IAEA publication: Training Course Series No. 21, 2nd edition, WWER-1000 Reactor Simulator: Workshop Material (2005). Course material for workshops using a pressurized water reactor (PWR) simulator developed by Cassiopeia Technologies Incorporated, Canada, is presented in the IAEA publication: Training Course Series No. 22, 2nd edition, Pressurized Water Reactor Simulator: Workshop Material (2005).

This report consists of course material for workshops using a boiling water reactor (BWR) simulator. W.K. Lam, of Cassiopeia Technologies Incorporated, developed the simulator and prepared this report for the IAEA. The IAEA officer responsible for this publication was R.B Lyon from the Division of Nuclear Power.

EDITORIAL NOTE

The use of particular designations of countries or territories does not imply any judgement by the publisher, the IAEA, as to the legal status of such countries or territories, of their authorities and institutions or of the delimitation of their boundaries.

The mention of names of specific companies or products (whether or not indicated as registered) does not imply any intention to infringe proprietary rights, nor should it be construed as an endorsement or recommendation on the part of the IAEA.

CONTENTS

1. INTRODUCTION 1

1.1 Purpose 1
1.2 Historical background 1
1.3 Prominent characteristics of the BWR 3

2. 1300 MW(E) BOILING WATER REACTOR NPP SIMULATOR 5

2.1 Simulator startup 7
2.2 Simulator initialization 7
2.3 List of BWR simulator display screens 8
2.4 Generic BWR simulator display common features 8

3. SIMULATOR DISPLAY SCREENS 10

3.1 BWR plant overview screen 10
3.2 BWR control loops screen 12
3.3 BWR power/flow map & controls 14
3.4 BWR reactivity & controls screen 18
3.5 BWR scram parameters screen 20
3.6 BWR turbine generator screen 21
3.7 BWR feedwater and extraction steam screen 22

4. SIMULATOR EXERCISES 24

4.1 Introductory exercises 24
4.1.1 Power maneuver: 10% power reduction and return to full power 24
4.1.2 Reduction to 0% full power and back to 100% full power 24
4.1.3 Turbine trip and recovery 25
4.1.4 Reactor scram and recovery 25
4.2 Malfunction exercises 26
4.2.1 Loss of feedwater - both FW pumps trip. 26
4.2.2 Increasing core flow due to flow control failure 28
4.2.3 Decreasing core flow due to flow control failure 29
4.2.4 Decreasing steam flow from dome due to pressure control failure 30
4.2.5 Increasing steam flow from dome due to pressure control failure 30
4.2.6 Turbine throttle PT fails low 32
4.2.7 Safety relief valve (SRV) on one main steam line fails open 33
4.2.8 Feedwater level control valve fails open 34
4.2.9 Turbine trip with bypass valve failed closed 35
4.2.10 Inadvertent withdrawal of one bank of rods 36
4.2.11 Inadvertent insertion of one bank of rods 37
4.2.12 Inadvertent reactor isolation 38
4.2.13 Loss of feedwater heating 39
4.2.14 Power loss to three reactor internal pumps (RIPs) 41
4.2.15 Steam line break inside drywell 42
4.2.16 Feedwater line break inside drywell 43
4.2.17 Reactor vessel bottom break - 3000 kg/sec LOCA 45
4.2.18 Load rejection 47

5. STEADY STATE MODEL 48

5.1 Purpose 48
5.2 Boiling water reactor mass and energy balance 48
5.3 Boiling water reactor spreadsheet model 51
5.3.1 Procedures for spreadsheet model 53
5.3.2 Steady state model solutions 55

6. DYNAMIC MODEL DESCRIPTION 56

6.1 Reactor model 57
6.2 Fuel heat transfer 59
6.3 Decay heat model 60
6.4 Coolant heat transfer 61
6.5 Core hydraulics and heat transfer 63
6.5.1 Incompressible flow for non-boiling region 63
6.5.2 Compressible flow for boiling region 65
6.5.3 Boiling boundary 66
6.5.4 Summary of multi-nodal approach for simulating core hydraulics and heat transfer 66
6.6 Saturated enthalpy, saturated liquid density 67
6.7 Core exit enthalpy, core quality, void fraction 68
6.8 Dome mass balance and energy balance 68
6.9 Saturated steam density and dome pressure 69
6.10 Driving pressure in boiling core 70
6.11 Recirculation flow & pressure losses 71
6.12 Coolant recirculation pumps 72
6.13 Feedwater flow 72
6.14 Main steam system 73
6.15 Control and protection systems 74
6.15.1 Control rods control system 75
6.15.2 Recirculation flow control 75
6.15.3 Reactor pressure control system 76
6.15.4 Reactor water level control system 77
6.15.5 Turbine power control system 78
6.15.6 Turbine steam bypass control system 78
6.15.7 Protection system 78
6.15.8 Automatic responses to design basis events accidents 79

APPENDIX: BWR technical data 81

1. INTRODUCTION

1.1 PURPOSE

The International Atomic Energy Agency (IAEA) has established an activity in nuclear reactor simulation computer programs to assist its Member States in education. The objective is to provide, for a variety of advanced reactor types, insight and practice in reactor operational characteristics and their response to perturbations and accident situations. To achieve this, the IAEA arranges for the supply or development of simulation programs and educational materials, sponsors workshops, and distributes documentation and computer programs.

This publication consists of course material for workshops using the boiling water reactor (BWR) simulator. Participants in the workshops are provided with instruction and practice in using the simulator, thus gaining insight and understanding of the design and operational characteristics of BWR nuclear power plant systems in normal and accident situations.

This manual is written with the assumption that the readers already have some knowledge of the boiling water reactor. Therefore no attempt has been made to provide detailed descriptions of each individual BWR subsystem. Those descriptions are commonly found in nuclear engineering textbooks, BWR nuclear power plant (NPP) design manuals, and IAEA technical publications. However, details are provided where necessary to describe the functionality and the interactive features of the individual simulator screens, which relate to the specific BWR subsystems.

The manual covers basic NPP operations, such as plant load maneuvering, trips and recovery e.g. turbine trip and reactor scram. In addition, it covers plant responses to malfunction events. Some malfunction events lead to reactor scram or turbine trip. Other serious malfunction events (e.g. LOCA) lead to actuation of the core cooling safety system.

It should be mentioned that the equipment and processes modeled in the simulator represent realistic BWR characteristics. However, for the purpose of the educational simulator, there are necessary simplifications and assumptions made in the models, which may not reflect any specific vendor's BWR design or performance.

Most importantly, the responses manifested by the simulator, under accident situations, should not be used for safety analysis purposes, despite the fact that they are realistic for the purpose of education. As such, it is appropriate to consider that those simulator model responses perhaps only provide first order estimates of the plant transients under accident scenarios.

1.2 HISTORICAL BACKGROUND

Boiling water reactor plants were designed in the 1950s and put into operation starting from the early 1960s. Many BWR plants have been constructed and operated safely worldwide. They constitute a significant electricity source from nuclear fission.

Although changes and improvements have been made in BWR designs throughout their history of operation, the basic concept is essentially unchanged since the first BWR design proposed by General Electric.

The basic feature of all BWR plants is the presence of a reactor pressure vessel (RPV) in which feedwater enters the vessel in subcooled conditions and saturated steam exits the vessel. The subcooled feedwater is heated by nuclear fission heat from the fuel bundles, as it travels up the various coolant channels in the reactor core. As boiling of the reactor coolant occurs at the upper region of the core coolant channels, a water-steam mixture exits the reactor core (into the upper plenum) at saturation temperature. Nominal core operating pressure is typically 7.0 MPa, which is nearly the same for all BWR designs. The water-steam mixture is then separated and dried in the upper plenum, with the saturated steam flowing directly to the turbine. The saturated liquid, separated from the water-steam mixture, is then recirculated back to the annular downcomer of the RPVwhere the subcooled feedwater mixes with the saturated liquid in the lower plenum region of the reactor vessel, before entering the coolant channels.

Originating from this basic BWR core design are the following reactor types that have been built and operated. Examples of existing plants are shown in parentheses:

- Natural circulation direct cycle BWR (Dodewaard)
- Forced Circulation Duel Cycle (Dresden 1, Garigliano)
- Forced Circulation Direct Cycle - external pumps (Ringhals, Oyster Creek)
- Forced Circulation Direct Cycle - jet pumps (Leibstadt, Dresden 2)
- Forced Circulation Direct Cycle - internal pumps (Kashiwazaki-Kariwa, Oskarshamn)

The evolution of the BWR design was started with a relatively complex dual cycle design (Dresden 1), involving an intermediate steam generator. Then the design evolved to a direct cycle using external pumps (e.g. Oyster Creek), to a jet pump reactor (e.g. Dresden 2). Nowadays, an example of a new BWR is the advanced boiling water reactor (ABWR) using internal pumps (e.g. Kashiwazaki-Kariwa), jointly designed by General Electric, Hitachi and Toshiba.

Historically, the dual cycle plant was designed and constructed in the early stages of BWR development, with the plant in the reactor-follow mode, i.e. the reactor power follows the turbine power. An intermediate steam generator was introduced to boil the feedwater utilizing the saturated liquid extracted from the primary circuit. The steam produced in the steam generator flowed to the turbine through a secondary steam line and was used to control the plant in reactor-follow mode. All the plants of this type are currently shutdown.

In order to increase the core cooling capability, pumps were introduced in the recirculation loop. The simplest configuration was with external pumps suctioning the fluid from the downcomer region and injecting it at higher pressure into the lower plenum of the core.

Further BWR development involved the recirculation loop configuration with jet pumps. The introduction of jet pumps satisfied two additional design objectives: (1) only a portion of the core coolant was recirculated externally to the vessel, and (2) no large pipe was connected to the bottom of the vessel, thus making core flooding easier in the unlikely event of a large pipe break in vessel-connected piping.

The configuration with internal pumps in the recirculation loop eliminates the piping and flows external to the vessel. Such a configuration is currently in the advanced BWR design.
A large variety of fuel designs is currently available. While the fuel box dimension generally remained unchanged, the number of fuel rods and rods lattice changed from 7×7, to 8×8, up

to 10 × 10. The control rods are inserted through the vessel from the bottom. As a consequence of larger moderation at the channel bottom, the axial power shape is typically bottom-skewed.

Finally, almost all BWR plants are equipped with a pressure suppression containment including a large pool of ambient temperature liquid (~ 5000 m^3) where the steam-liquid mixture lost from a LOCA (loss of coolant accident) can be condensed. The containment also serves as a protective shield and prevents release of radioactive contamination to the outside of the reactor building, in the unlikely event of a serious accident.

1.3 PROMINENT CHARACTERISTICS OF THE BWR

A typical BWR is characterized by several prominent differences from other light water reactors (LWRs) such as the PWR:

(1) The core normal operating conditions result in two phases: a subcooled liquid phase in the non-boiling region; and a saturated steam-water mixture in the boiling region.

(2) Steam generation occurs in a direct cycle with steam separators and dryers inside the reactor pressure vessel. A separate steam generator is not required. Typical operating temperature is 288°C; steam pressure ~ 7 MPa.

(3) The reactor (steam dome) pressure is controlled by turbine inlet valves and turbine bypass valves.

(4) The BWR core consists of a number of fuel bundles (assemblies), each with a casing called a fuel channel. Each fuel bundle (assembly) contains a number of fuel rods arranged in a N × N square lattice, with slightly enriched Uranium fuel ~ 2% to 5% U-235 by weight.

(5) The control rods are of cruciform shape and enter the core from the bottom. Each control rod moves between 4 fuel assemblies.

(6) The reactor power control consists of control rods and recirculation flow control. Control rods are used to achieve the desired power level by adjustment of their positions in the core at a rate equivalent to a power change rate of 2% full power per sec. The recirculation flow control also controls reactor power by causing the density of the water used as moderator to change. The flow rate is adjusted by a variable speed pump (such as the internal pumps of the ABWR) at a rate equivalent to a power change rate of 30% full power per minute.

(7) "Dried" steam from the reactor pressure vessel (RPV) enters the turbine plant through four steam lines connected to nozzles equipped with flow limiters. In the unlikely event of a steam line break anywhere downstream of the nozzle, the flow limiters limit the steam blowdown rate from the RPV to less than 200% rated steam flow rate at 7.07 MPa.

(8) There are safety relief valves (16 of them) connected to the four steam lines to prevent RPV overpressure, with a blow down pipe connected to the suppression pool.

(9) In the steam lines, isolation valves are provided inside and outside of the containment wall to isolate the RPV, if necessary.

(10) Saturated steam from the RPV main steam lines is then admitted to the turbine HP cylinder via the governor valves. After the HP section, steam passes through the moisture separator reheater (MSR) to the LP turbine cylinders.

(11) A special steam bypass line, prior to the turbine governor valves, enables dumping the full nominal steam flow directly to the condenser in the event of plant upset such as a turbine trip, in order to avoid severe pressure surges and corresponding power peaks in the reactor.

(12) Typical balance of plant (BOP) systems for the BWR consists of the condenser, condensate pumps, deaerator, feedwater heaters, reactor feed pumps (RFP) and reactor level control valves.

(13) The containment is a cylindrical prestressed concrete structure with an embedded steel liner. It encloses the reactor, reactor coolant pressure boundary and important ancillary systems. The containment has a pressure-suppression type pool with drywell and wetwell.

A typical BWR design with the above described features is shown in Figure 1. Descriptions of a number of BWR designs can be found in IAEA-TECDOC-1391 Status of Advanced Light Water Cooled Reactor Designs (2004).

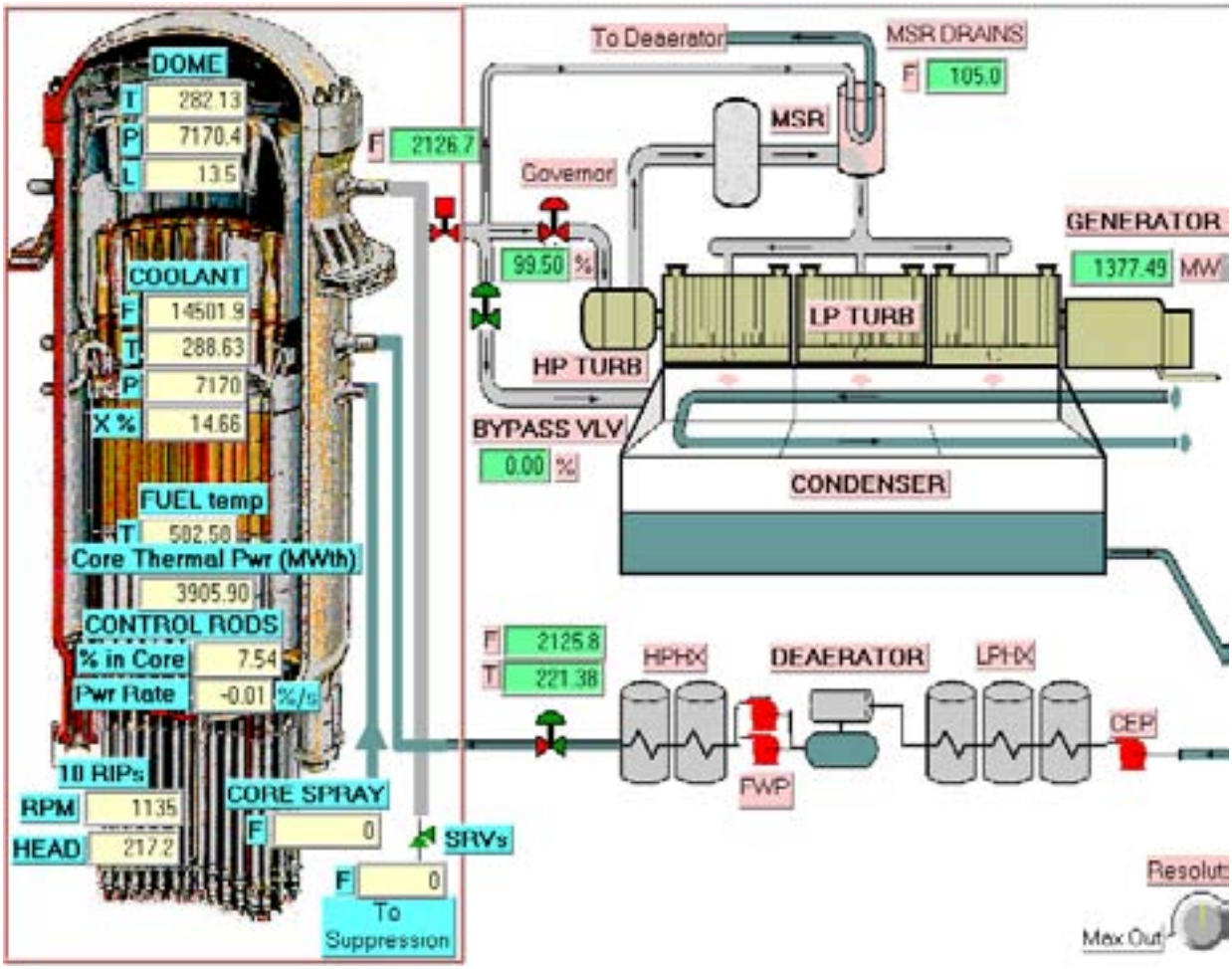

FIG. 1. A typical 1300 MW(e) boiling water reactor NPP.

2. 1300 MW(e) BOILING WATER REACTOR NPP SIMULATOR

The purpose of the 1300 MW(e) boiling water reactor NPP simulator is educational — to provide a teaching tool for university professors and engineers involved in teaching topics in nuclear energy. As well, nuclear engineers, scientists and teachers in the nuclear industry may find this simulator useful in broadening their understanding of BWR NPP dynamics and transients.

The simulator can be executed on a personal computer (PC), to operate essentially in real time, and have a dynamic response with sufficient fidelity to provide BWR plant responses during normal operations and accident situations. It also has a user-machine interface that mimics the actual control panel instrumentation, including the plant display system, and more importantly, allows user interaction with the simulator during the operation of the simulated BWR plant.

The minimum hardware configuration for the simulator consists of a Pentium PC or equivalent (minimum 166 MHz CPU speed), minimum of 64 Mbytes RAM with 256 external Cache, at least 500 Mbytes enhanced IDE hard drive, 2 Mbytes VRAM, hi-resolution video card (capable of 1024 x 768 resolution), 15 inch or larger high resolution SVGA colour monitor, keyboard and mouse. The operating system can be Windows 95, Windows NT, Windows 2000, or Windows XP.

The requirement of having a single PC to execute the models and display the main plant parameters in real time on a high-resolution monitor implies that the models have to be as simple as possible, while having realistic dynamic response. The emphasis in developing the simulation models was on giving the desired level of realism to the user. That means being able to display all plant parameters that are critical to operating the unit, including the ones that characterize the main process, control and protective systems. The current simulator configuration is able to respond to the operating conditions normally encountered in power plant operations, as well as to numerous malfunctions, as summarized in Table I.

The simulation development used a modular modeling approach: basic models for each type of device and process are represented as algorithms and developed in FORTRAN. These basic models are a combination of first order differential equations, logical and algebraic relations. The appropriate parameters and input-output relationships are assigned to each model as demanded by a particular system application.

The interaction between the user and the simulator is via a combination of monitor displays, mouse and keyboard. Parameter monitoring and plant operator controls, ,are represented in a virtually identical manner on the simulator. Control panel instruments and control devices, such as push-buttons and hand-switches, are shown as stylized pictures, and are operated via special pop-up menus and dialog boxes in response to user inputs.

This manual assumes that the user is familiar with the main characteristics of water cooled thermal nuclear power plants, as well as understanding the unique features of the BWR.

TABLE I. SUMMARY OF BWR SIMULATOR FEATURES

SYSTEM	SIMULATION SCOPE	DISPLAY PAGES	OPERATOR CONTROLS	MALFUNCTIONS
REACTOR CORE	• Neutron flux levels over a range of 0.001 to 110% full power, 6 delayed neutron groups • Decay heat (3 groups) • Reactivity feedback effects - void, xenon, fuel temperature, moderator temperature • 2 phase flow & heat transfer • Reactivity control rods • Essential control loops - Reactor Pressure Control; Core Recirculation Flow Control; Reactor Power Regulation; Reactor Water Level Control; Turbine Load/Frequency Control	• Plant Overview • BWR Reactivity & Setpoints • BWR Power /Flow Map & Controls	• Reactor power and rate of change (input to control computer) • Manual control of control rods • Reactor scram • Manual Control Rods "run-in" • Manual control of core recirculation flow rate • Manual adjustment of reactor water control level setpoint	• Increasing and decreasing core flow due to Flow Control malfunctions • Inadvertent withdrawal of one bank of control rods • Inadvertent insertion of one bank of control rods • Inadvertent reactor isolation • Power loss to 3 Reactor Internal Pumps (RIPs) • Reactor bottom break
STEAM & FEED-WATER	• Steam supply to turbine and reheater • Main Steam Isolation Valve • Turbine Bypass to condenser • Steam Relief Valves to Suppression Pool in containment • Extraction steam to feed heating • Feedwater system	• BWR Feedwater and Extraction Steam	• Reactor water level setpoint changes: computer or manual • Extraction steam to feedwater heating isolating valves controls • Deaerator main steam extraction pressure control • Feed pump on/off controls	• Loss of both feedwater pumps • Loss of feedwater heating • Reactor feedwater level control valve fails open • Safety valves on one main steam line fail open • Steam line break inside Drywell • Feedwater line break inside Drywell

SYSTEM	SIMULATION SCOPE	DISPLAY PAGES	OPERATOR CONTROLS	MALFUNCTIONS
TURBINE-GENERATOR	• Simple turbine model • Mechanical power and generator output are proportional to steam flow • Speeder gear and governor valve allow synchronized and non-synchronized operation	• BWR Turbine-Generator	• Turbine trip • Turbine run-back • Turbine run-up and synchronization • Turbine Speeder Gear control: manual or computer control • Steam Bypass Valve Computer or Manual Control	• Turbine throttle pressure transmitter fails low • Turbine trip with Bypass Valve failed closed • Increasing and decreasing steam flow due to Pressure Control System failures
OVERALL UNIT	• Fully dynamic interaction between all simulated systems • Turbine-Following-Reactor load maneuvering • Unit annunciation • Major control loops	• BWR Plant Overview • BWR Reactivity & Setpoints		

2.1 SIMULATOR STARTUP

- Select program 'BWR' for execution - the executable file is BWR.exe
- Click anywhere on 'BWR simulator" screen
- Click 'OK' to 'Load Full Power IC?'
- The simulator will display the 'Plant Overview' screen with all parameters initialized to 100% Full Power
- At the bottom right hand corner click on 'Run' to start the simulator

2.2 SIMULATOR INITIALIZATION

If at any time you need to return the simulator to one of the stored initialization points, do the following:

- 'Freeze' the simulator
- Click on 'IC'
- Click on 'Load IC'

- Click on ‘FP_100.IC’ for 100% full power initial state
- Click ‘OK’ to ‘Load C:\BWR_Simulator\FP_100.IC’
- Click ‘YES’ to 'Load C:\BWR_Simulator\FP_100.IC’
- Click ‘Return’
- Start the simulator operating by selecting ‘Run’.

2.3 LIST OF BWR SIMULATOR DISPLAY SCREENS

(1) BWR Plant Overview
(2) BWR Control Loops
(3) BWR Power/Flow Map & Controls
(4) BWR Reactivity & Setpoints
(5) BWR Scram Parameters
(6) BWR Turbine Generator
(7) BWR Feedwater & Extraction Steam
(8) BWR Trends

2.4 GENERIC BWR SIMULATOR DISPLAY COMMON FEATURES

The generic BWR simulator has 8 interactive display screens or pages. Each screen has the same information at the top and bottom, as follows:

- The top of the screen contains 21 plant alarms and annunciations; these indicate important status changes in plant parameters that require operator actions;
- The top right hand corner shows the simulator status:
  - ⇒ The window under ‘Labview’ (this is the proprietary graphical user interface software that is used to generate the screen displays) has a counter that is incrementing when Labview is running; if Labview is frozen (i.e. the displays cannot be changed) the counter will not be incrementing;
  - ⇒ The window displaying ‘CASSIM’ (this is the proprietary simulation engine software that computes the simulation model responses) will be green and the counter under it will not be incrementing when the simulator is frozen (i.e. the model programs are not executing), and will turn red and the counter will increment when the simulator is running;
- To stop (freeze) Labview click once on the ‘STOP’ (red “Stop” sign) at the top left hand corner; to restart ‘Labview’ click on the ⇒ symbol at the top left hand corner;
- To start the simulation click on ‘Run’ at the bottom right hand corner; to ‘Stop’ the simulation click on ‘Freeze’ at the bottom right hand corner;
- The bottom of the screen shows the values of the following major plant parameters:
  - ⇒ Reactor neutron power (%)
  - ⇒ Reactor thermal power (%)
  - ⇒ Turbine generator output power (Gross) (%)

- ⇒ Reactor pressure (KPa)
- ⇒ Core flow (Kg/s)
- ⇒ Reactor water level (m)
- ⇒ Balance of plant (BOP) steam flow (Kg/s) — that means steam flow after the main steam isolation valve
- ⇒ Feedwater flow (Kg/s)
- ⇒ Average fuel temperature (Deg. C)

- The bottom left hand corner allows the initiation of two major plant events:
  - ⇒ 'Reactor trip' or 'reactor scram'
  - ⇒ 'Turbine trip'

These correspond to hardwired push buttons in the actual control room.

- The box above the trip buttons shows the display currently selected (i.e. 'plant overview'); by clicking and holding on the arrow in this box the titles of the other displays will be shown, and a new one can be selected by highlighting it;
- The remaining buttons in the bottom right hand corner allow control of the simulation one iteration at a time ('Iterate'); the selection of initialization points ('IC'); insertion of malfunctions ('Malf'); and calling up the 'Help' screen (online hyperlinked "Help" is not available yet).

As a general rule, all dynamic display values shown in display boxes on the screens follow the following conventions:

- All pressure values are designated as "P" next to the display box, and have units of KPa;
- All temperature values are designated as "T" next to the display box and have values of deg. C;
- All flow values are designated as "F" next to the display box and have values of Kg/s;
- 2 phase qualities are indicated as "X" next to the display box and have% as units.

Valve status and pump status as shown by dynamic equipment symbols are represented as follows:

- Valve status — red for valve fully open; green for valve fully closed; partial red and green indicates partial valve opening;
- Pump status — red for running; green for stopped.

3. SIMULATOR DISPLAY SCREENS

3.1 BWR PLANT OVERVIEW SCREEN

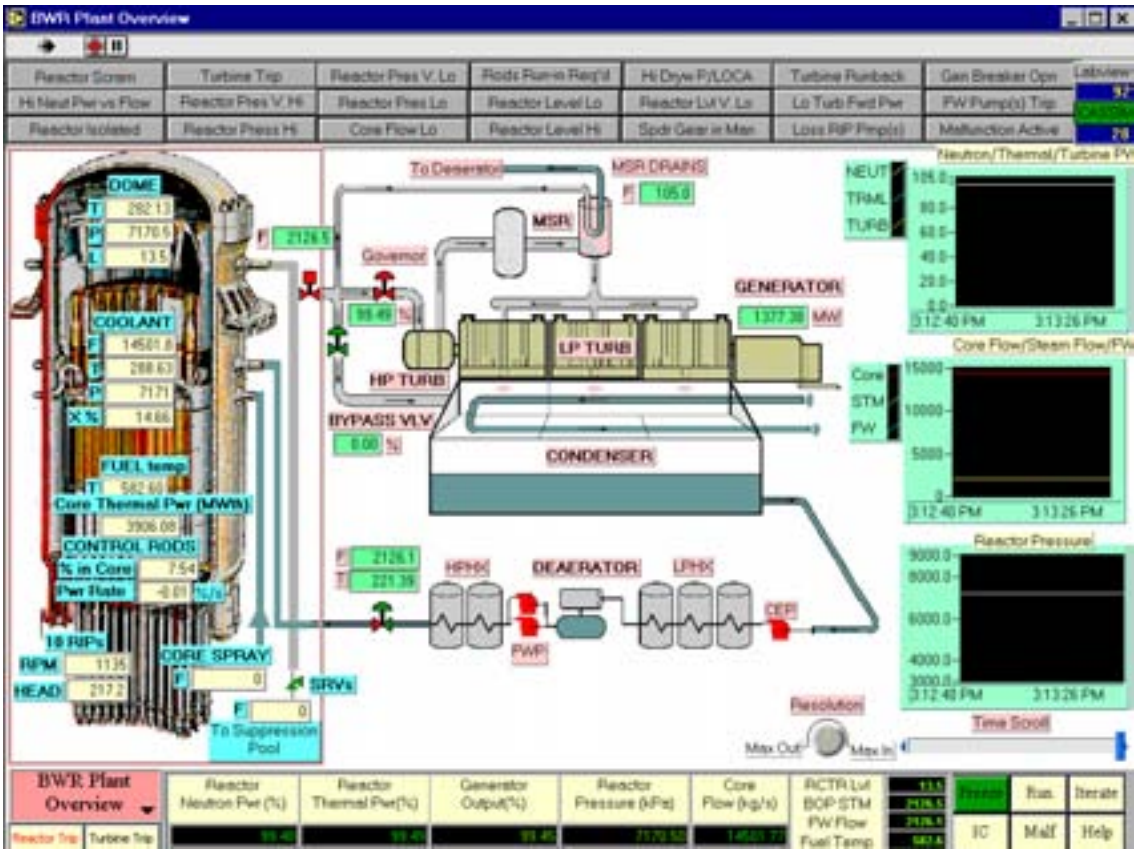

This screen shows a 'line diagram' of the main plant systems and parameters. No inputs are associated with this display. The systems and parameters displayed are as follows (starting at the bottom left hand corner):

- REACTOR is a point kinetic model with six groups of delayed neutrons; the decay heat model uses a three-group approximation; 2-phase flow and heat transfer. Reactivity calculations include reactivity control rods — FMCRD, fine motion control rods, and reactivity feedback effects due to Xenon, 2-phase voiding in channels; fuel temperature (Doppler) and moderator (light water) temperature.

- The reactor parameters displayed are:

  Reactor dome section

  ⇒ Dome steam temperature (ºC)

  ⇒ Dome pressure (p)

  ⇒ Steam flow from core (Kg/s)

  ⇒ Reactor water level (m)

  Reactor core section

  ⇒ Neutron power rate (%/ second)

⇒ Thermal power generated by core (MW(th))

⇒ Average fuel temperature (ºC)

⇒ Coolant flow rate in core (Kg/s)

⇒ Coolant pressure at core exit (p)

⇒ Coolant temperature at core exit (ºC)

⇒ Coolant quality at core exit (X%)

⇒ Control rods position in core (% of total length in core). Note control rods reactivity worth is as follows: 100% in core - negative 100 milli-K; 100% out-of-core - positive 70 milli-K.

Reactor downcomer section

⇒ Reactor internal pumps head (KPa)

⇒ Reactor internal pumps speed (RPM)

- Outside the reactor pressure vessel (RPV) and still inside the containment are shown:

  ⇒ Main steam isolation valve status: red means fully open;

  ⇒ The main steam lines have branch connection to the safety relief valves (SRVs) that are connected to the suppression pool inside containment. Here all the SRVs are shown in "one equivalent valve" symbol; in fact there are 8 SRVs, with 2 SRVs associated with each main steam line; and there are four separate main steam lines. So the steam flow shown is for total steam flow through all the SRVs.

  ⇒ Emergency core cooling (ECC) injection is shown here as "core spray" flow in case of loss of coolant accident. Note in this model, no distinction is made between LP flooder and HP flooder. They are all treated as one source and go directly to the core upper plenum. The ECC water is assumed to be at temperature ~ 20 deg. C.

  ⇒ Note: The containment drywell and wetwell are not modeled in this simulator. But in the event of major accidents inside the drywell, such as feedwater line break, steam line break, and reactor bottom break, these breaks will cause high pressure in drywell, which in turn will trigger the LOCA signal. As a result, ECC will be started, the reactor will be scrammed, and "isolated".

- Outside containment is the balance of plant systems — turbine generator, feedwater & extraction steam. The following parameters are shown:

  ⇒ Status of control valves is indicated by their colour: green is closed, red is open; the following valves are shown for the steam system:

  Turbine governor valve opening (%)
  Steam bypass valve opening (%)

  ⇒ Moisture separator and reheater (MSR) drains flow (kg/sec)

  Generator output (MW) is calculated from the steam flow to the turbine

- Condenser and condensate extraction pump (CEP) are not simulated but the pump status is shown.

- Simulation of the feedwater system is very much simplified; the parameters displayed on the plant overview screen are:
  - ⇒ Total feedwater flow to the steam generators (kg/sec)
  - ⇒ Average feedwater temperature after the high pressure heaters (HPHX)
  - ⇒ Status of feedwater pumps (FWP) is indicated as red if any pumps are 'ON' or green if all the pumps are 'OFF'

Three trend displays show the following parameters:

- Reactor neutron power, reactor thermal power and turbine power (0-100%)
- Core flow, steam flow, feedwater flow (Kg/s)
- Reactor pressure (kPa)

  The upper and lower limits of the parameter trends can be altered while the simulator is running by clicking on the number to be changed and editing it.

  Note that while the simulator is in the 'Run' mode, all parameters are being continually computed and all the displays are available for viewing and inputting changes.

3.2 BWR CONTROL LOOPS SCREEN

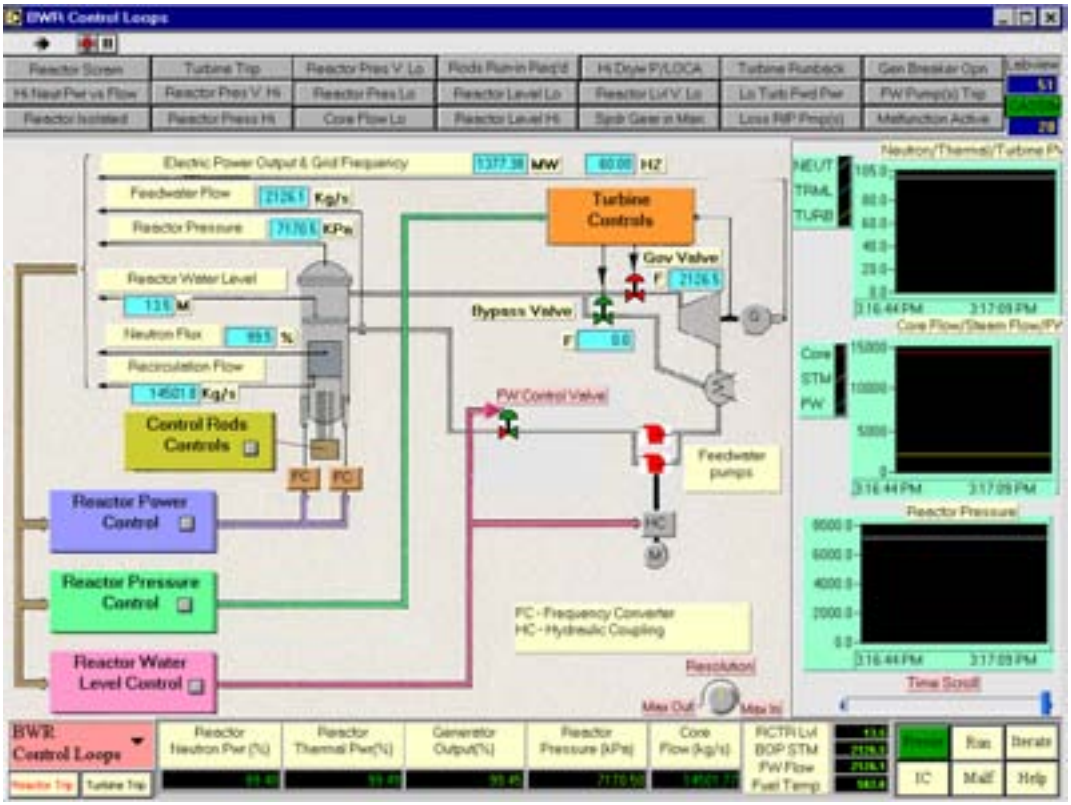

This screen shows all the essential control loops for the generic BWR plant, and the essential control parameters for these loops. The parameters are:

- Generator output and frequency
- Feedwater flow
- Reactor pressure
- Reactor water level
- Neutron flux
- Core flow

The essential control loops are:

⇒ **Control rods control** — press the button to display a pop-up window, which describes the functions of the control system. The control rod drive system is composed of three major elements: the fine motion control rod drive, FMCRD mechanisms; the hydraulic control unit (HCU) assemblies; the control rod drive hydraulic subsystem (CRDH). The FMCRDs together with the other components are designed to provide:

(1) Electric-motor-driven positioning for normal insertion and withdrawal of the control rods;

(2) Hydraulic-powered rapid control rod insertion (scram) in response to manual or automatic signals from the reactor protection system (RPS);

(3) Electric-motor-driven "Run-Ins" of some or all of the control rods as a path to rod insertion for reducing the reactor power by a sizable amount.

For manual control of control rods and recirculation pumps, go to Screen BWR Power/Flow Map & Controls".

⇒ **Reactor power control** — press the button to display a pop-up window, which describes the functions of the control system. The reactor power output control system consists of control rods, rod drive system and recirculation flow control system. The control rods and their drive system maintain a constant desired power level by adjusting the position of the rods inside the core. The recirculation flow control also controls the reactor power level by changing the recirculation flow to alter the void density of the two-phase water in the core, which leads to a change in reactivity in the core due to the altered neutron moderation efficiency of the coolant. The recirculation flow is controlled by recirculation pumps known as reactor internal pumps (RIPs). The pump speed changes according to the change of frequency of the induction motor that drives the pump. Different pump speed will give rise to different pump dynamic head in the core recirculation flow path, resulting in different core flow. This recirculation flow control system is capable of changing the reactor output rapidly over a wide range. Go to Screen "BWR Reactivity & Setpoints" for changing reactor power setpoint, and observe the Power & Recirculation Flow relationship in Screen " BWR Power/Flow Map & Controls"

⇒ **Reactor pressure control** — press the button to display a pop-up window, which describe the functions of the control system. When the reactor is in power level operation, the reactor pressure is automatically controlled to be constant. For that purpose, a pressure controller is provided and is used to regulate the turbine inlet steam pressure by opening and closing the turbine governor control valve and the turbine bypass valve. Currently, the reactor pressure setpoint is set at plant design pressure of 7170 KPa.

⇒ **Reactor water level control** — press the button to display a pop-up window, which describes the functions of the control system. In order to suppress the water carry-over in the steam going to the turbine as well as to prevent the core from being exposed, three signals detecting the feedwater flow, the main steam flow, and the water level inside the reactor pressure vessel are provided. The flow of feedwater is automatically controlled to maintain the specified water level by a "three element" control scheme: steam flow, feedwater flow, and water level. The valve opening of the feedwater control valve provided at the outlet of the feedwater pumps is regulated by the control signal as result of this "three-element" control scheme. To modify the reactor water level setpoint, go to Screen " BWR Feedwater & Extraction Steam", and call up the related Pop-Up Window.

⇒ **Turbine control** — the turbine control employs an electrohydraulic control system (EHC) to control the turbine valves. Under normal operation, the reactor pressure control (RPC) unit keeps the inlet pressure of the turbine constant, by adjusting the opening of the turbine "speeder gear" which controls the opening of the turbine governor valve opening. Should the generator speed increase due to sudden load rejection of the generator, the speed control unit of the EHC has a priority to close the turbine governor valve over the reactor pressure control (RPC) unit.

⇒ **Turbine steam bypass system** — the simulated BWR plant is designed with turbine steam bypass capacity of over 75% rated steam flow. Hence, in the event of any reactor pressure disturbances, either caused by reactor power sudden increases, or due to turbine load rejection, or frequency changes, and the reactor pressure control unit cannot cope with these pressure increases fast enough, the turbine bypass valve will open up to pass steam to condenser to reduce sudden reactor pressure increases. The setpoint for the bypass valve to "come in" when the turbine is not "tripped" is — 130 KPa (called bias) over the normal reactor setpoint of 7170 KPa. That means the bypass valve will not open until the reactor pressure increases to > 7300 KPa; this gives room for the turbine control valve to act in an attempt to control pressure back to 7170 KPa. However, if the turbine is tripped, the bias will be removed and the setpoint for the bypass valve is 7170 KPa. Therefore, with the designed Steam Bypass System, reactor scram is not necessary for spurious turbine trip, but a large reduction of reactor power from full power to ~ 60% FP will result due to "Rods Run-in" coming into action. This term refers to rapid insertion of control rods into the core to reduce reactor power by a large step. However, for full load rejection, a reactor scram will occur.

3.3 BWR POWER/FLOW MAP & CONTROLS

This screen shows

(a) The relationship between reactor neutron power versus core flow;

(b) The reactor core conditions with respect to boiling height; water level; fuel temperature; coolant temperature, pressure and flow; steam pressure, flow and temperature;

(c) Controls for scramming the reactor, as well as for resetting the scram; the AUTO/MANUAL controls for the control rods (FMCRD) and for the reactor internal pumps (RIPs) drive unit.

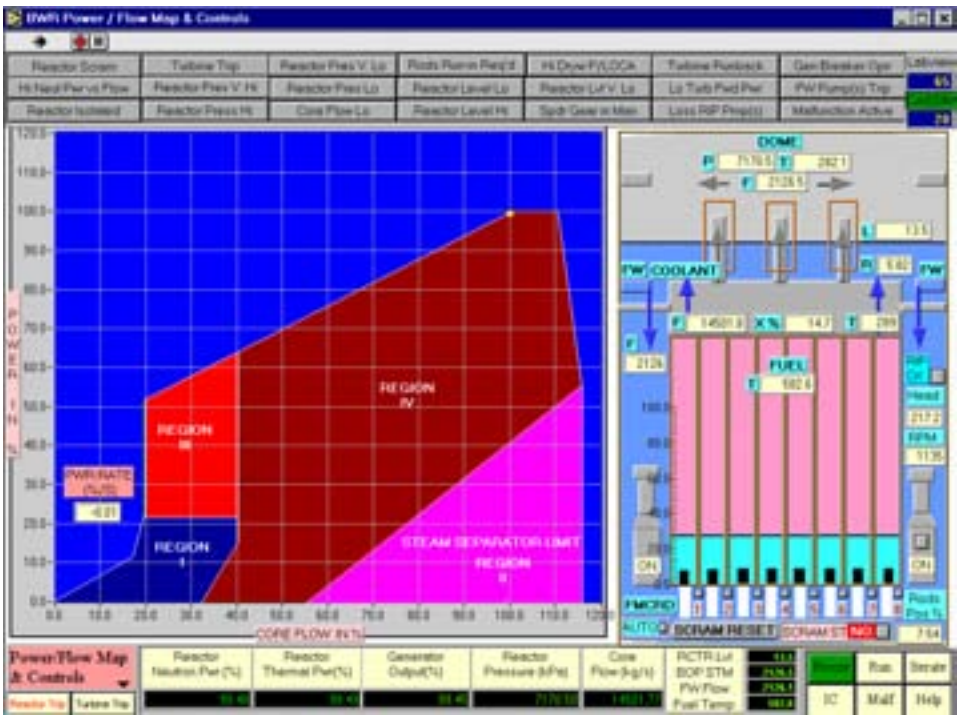

⇒ **POWER/FLOW MAP**

- The power flow map is a representation of reactor power vs. recirculation flow. The horizontal axis is the core flow in% of full power flow. The vertical axis is reactor neutron power in% full power.
- Any operation path that changes the power and the flow from one condition to another condition through control rod maneuver and/or recirculation flow change can be traced on this map. Under normal plant start-up, load maneuvering, and shutdown, the operation path through REGION IV is recommended. In fact, the line which borders between REGION I & IV, REGION III & IV, the blue region and REGION IV is the "maximum power-flow" path to be followed for power increases and decreases, and usually operation of the plant is "below" this "**maximum**" power-flow line.
- Limits are imposed to prevent operation in certain areas of the Power - Flow Map -

  (1) To maintain core thermal limits and to avoid operation above licensed power level - there are three measures to prevent that:

  (a) **Control rods withdrawal "Blocked**" — if at any time, the current power exceeds 105% of the power designed for the current flow rate (in accordance with the maximum power-flow line as described above), the Control Rods withdrawal will be "blocked" until the power drops to 5% less than the current value. Should this occur, the alarm **"Hi Neut Pwr vs Flow**" will be in "Yellow" color, as well, in the BWR Reactivity & Control Screen, there will be a "yellow color message" saying "Controls Rods Out Blocked".

  (b) **Control rods "Run-in"** — if any time the current power exceeds 110% of the power designed for the current flow rate (in accordance with the maximum power-flow line as described above), the control rods will be inserted into the core to reduce power quickly and the "Rods Run-in" will be stopped until the power has been reduced to 10% less than the current value.

Should this occur, the alarm **"Hi Neut Pwr vs Flow**" will be in "Yellow" color, as well as the alarm "**Rods Run-in Req'd**".

(c) **Reactor scram** — if any time the current power exceeds 113% of the power designed for the current flow rate (in accordance with the maximum power-flow line as described above), the reactor will be scrammed.

(2) To avoid operation where core instability may occur — in REGION III.

It is a well-known and well-documented phenomenon in the BWR that oscillations in neutronic and thermal-hydraulic parameters occur during operation in the conditions "low flow - high power" region identifiable in the Power/Flow Map as REGION III.[1]

Research has shown that such oscillations are characterized by "density wave" oscillations. From a physical point of view, the removal of thermal power by boiling water in a vertical channel, in a closed or open loop configuration, may cause instability in the operation owing to density changes and various thermalhydraulic feedback mechanisms. Since the coolant is also a neutron moderator, an oscillation in the coolant density (void content) is reflected as a variation of the thermal neutron flux, which in turn, via the heat flux, affects the void. This may cause a coupled neutronic-thermalhydraulic oscillation under certain power and core flow conditions. The details of core instability in Region III belong to an advanced topic that is beyond the scope of this manual.

(3) To avoid operation where excess moisture in the steam may be carried to the main turbine — in REGION II.

⇒ **REACTOR CORE GRAPHICS**

The right side of the screen depicts the reactor core conditions at all operations. As well, the control devices for control rods and the reactor internal pumps are provided. Starting from the bottom:

⇒ **FMCRD auto/manual button** — this button when pressed will allow the user to switch the control rods to be under the "**automatic**" control scheme or under "**manual**" control. If they are in "manual" mode, the switch status will be indicated as "MAN", and the user can then control the rods by pressing the button above the designated number of the control rods bank #1 to #8 respectively. A control pop-up will appear when the button is pressed, allowing the user to "insert" or to "withdraw" each "bank" of rods separately, by using the "in", or "out" pushbutton respectively in the pop-up. To stop the movement of the rods, use the "stop" pushbutton in the pop-up.

When the FMCRDs are in "Auto", the automatic control scheme is in control, and its details are described in the "BWR Reactivity & Controls Screen" section. In Auto mode, all the controls rods move together as controlled by the reactor power regulating system.

Note:

- There are approximately 208 FMCRDs in total, they are positioned and calibrated with reactivity worth of -100 mk when all of them are 100% in core, and +70 mk when all of them are 100% out of core; 0 mk when they are ~ 41% in core.

[1] OECD Report OCDE/GD(97)13: "State of the Art Report on boiling water reactors stability (SOAR on BWRS), January 1997.

- For the purpose of this generic simulator, the rods are grouped in 8 banks, so each bank of rods has + 8.75 mk when fully out of core; and -12.5 mk when fully in core. The full speed travel time for the rod movement during power maneuvering is typically 60 sec., or considering for the total FMCRDs in Auto mode, where all the rods move together, the reactivity change rate is ~ 2.8 mk per sec. Considering moving the banks of rods individually under manual Mode, then the reactivity change rate for each bank under manual mode control is ~ 0.36 mk per sec.
- The FMCRDs will be fully inserted into the core in the event of **a reactor scram**. In such case, the fast insertion time is typically 3 sec. for 100% insertion.
    - The average rods position in core is shown on the right hand bottom corner.

⇒ **SCRAM status indication, manual scram/reset button, SCRAM reset button —** when the reactor is scrammed, and if scram conditions still exist, there will be a "YES" sign next to the "SCRAM ST" indicator. As well, the alarm "Reactor Scram" is in "Red" color. Assuming the scram conditions have already disappeared, and user wishes to reset the scram, the button to the right of the "YES" indicator is pressed, which will bring up a control pop-up. The user can then press the "reset" pushbutton on the pop-up. If the reactor scram conditions do not exist at that time, then the "YES" sign will be changed to "NO" sign, meaning that the SCRAM Status indicates "NO" scram conditions. At this point, the user can proceed to press the "SCRAM RESET" button on the left side of the "SCRAM ST" indicator. When this button is pressed, the "Reactor Scram" Alarm will disappear, and the rods withdrawal will begin, as can be seen from the downward arrows shown for the rods banks. The rods withdrawal will stop at the "reset line" which is 50% in core, pending on control actions taken by the reactor regulating system. At the 50% in core position, the rods reactivity is ~ -15 mk, so the reactor is still subcritical. It is the role of the reactor regulating system to bring the reactor back to criticality.

⇒ **ON/OFF control for RIP pump motor** — there are 10 reactor internal pumps (RIPS), but they are modeled in one "lumped" pump, so the ON/OFF control button is used to turn "ON" or "OFF" all the pump motors. When the motor power is "Off", the speed drive will go to the minimum position, giving "zero" pump head. When the power is "ON", the speed drive signal is subject to the flow controller signal that is described later. The RIPs speed changes according to the change of frequency of the induction motor that drives the pumps. Different pump speed will give rise to different pump dynamic head in the core recirculation flow path, resulting in different core flow. The automatic flow control scheme is handled by a flow controller. First, based on the reactor power setpoint, there is a pre-programmed flow rate schedule according to that power setpoint. The pre-programmed schedule is typically to follow the "maximum power — flow" path as described in POWER-FLOW map section. Given the flow setpoint, the flow controller will drive the speed drive to provide enough pump head until the desired flow rate is achieved.

⇒ **Average pump head indicator, average pump speed indicator, flow controller control button** — the average pump head is shown in KPa, and the average pump speed is shown in RPM. The flow controller button is labeled as RIPCrl. When this button is pressed, it will show a typical controller template. The setpoint is on remote setpoint (RSP), meaning that it receives setpoint from the pre-programmed flow rate scheduler. The horizontal "blue" bar is for indication of the current flow rate; the "green" pointer is flow setpoint indicator. When the flow rate is at setpoint, the "green" pointer can be

seen to be at the tip of the “blue” bar. When the “auto” button is pressed, the controller is no longer subject to remote setpoint, rather it will be subject to “local” setpoint, and the user can enter a “new” setpoint into the box under “SP”. Alternatively, the user can switch the controller to manual. In that case, the output% box will show “increase/decrease” arrow, meaning a% value can be entered into the out(%) box to change controller output directly, which will go to the speed drive.

⇒ **Core conditions display** - the following parameters are shown for the core conditions:

- Average fuel temperature
- Coolant flow rate, temperature at core exit, and quality (%) at core exit**;** feedwater flow rate; coolant recirculation ratio “R” are shown. The “blue” arrows show the flow path of the coolant out from the core channels, as it goes to the core upper plenum, enters the dome space, mixes with incoming feedwater, and goes down to the downcomer, to enter the suction path of the reactor internal pumps. Then from the RIPs discharge, the coolant enters the core lower plenum generally with subcooled temperature. As the coolant enters the core channel again, the subcooled water receives heat from the fuel bundles, and becomes two-phase fluid that exits the core with quality. The steam vapor from the coolant escapes the fluid and becomes saturated steam; the remaining water content of the fluid is recirculated back to the downcomer after mixing with incoming feedwater.
- The boiling height – 2-phase boiling region of the core is shown in a “pink” color. It is animated, so as the boiling height changes as the core conditions change, the “pink” section boundary changes. The same applies to the “light blue” subcooled section - or non-boiling section of the core.
- The water level in the core is indicated as a” blue” color and is animated. As the level changes, the “blue” section boundary changes.
- For the Dome space, the gray arrows show the flow path of saturated steam, where the flow, pressure and temperature are shown.

3.4 BWR REACTIVITY & CONTROLS SCREEN

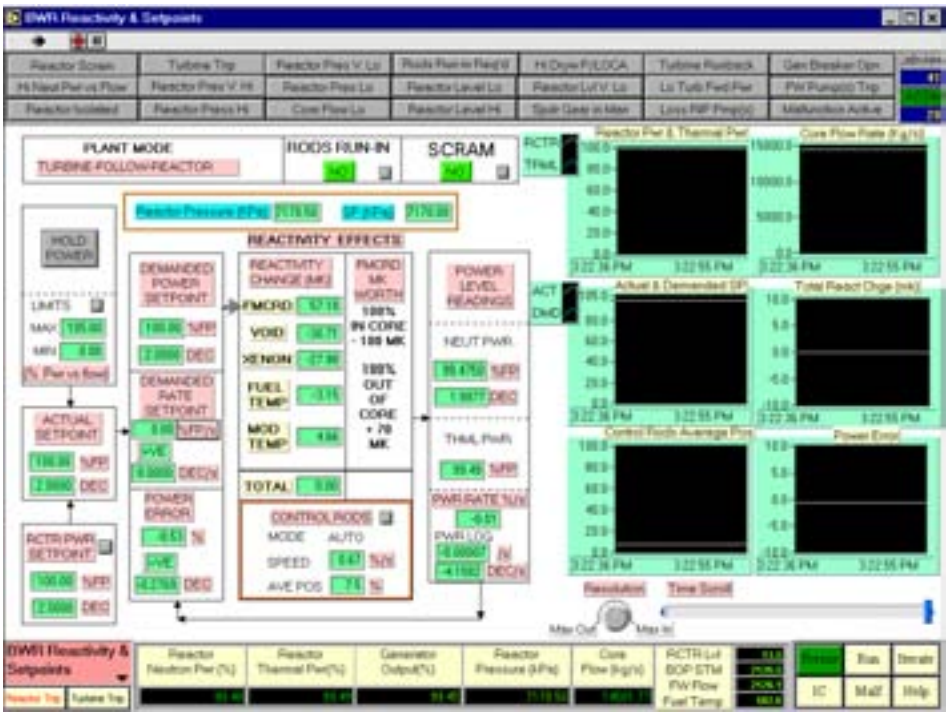

This screen shows input devices which facilitate reactor power setpoint entry, as well as to facilitate reactor 'Manual Scram', or 'Manual Rods Run-in". These inputs interact with an underlying reactor regulating system.

- The user can enter **new reactor power target** and **power change rate** by pressing the button located near the bottom left side of the screen next to "RCTR PWR SETPOINT". When this button is pressed, a control pop-up will allow the user to enter the reactor power target in%, and the rate in% full power per sec. (if current power is > 20% FP), or% present power per sec. (if the current power is < 20% FP). The purpose is to allow higher power rate change only at higher power.

- After the setpoint and rate are entered, the "ACTUAL SETPOINT" section reflects the setpoint actually accepted by the regulating system. Then the incremental demanded setpoint is computed in the "DEMANDED SETPOINT" section; as well the rate is shown in "DEMANDED RATE SETPOINT" section. The POWER ERROR is computed as:

  POWER ERROR = ACTUAL POWER - DEMANDED POWER

- The reactor regulating system will check if the current power is < 65%. If it is, then the control rods movement is necessary. Based on the power error - whether it is positive or negative, the rods will be inserted or withdrawn accordingly so that the power error becomes zero. If the current power is > 65%, then usually rods movement is not required, the new incremental demanded power setpoint signal in turn is sent to the flow rate scheduler (as described in previous section) which will provide a flow rate setpoint to the flow controller. If the flow rate increase/decrease cannot provide enough reactivity change causing sufficient reactor power increase/decrease so that the power error is less than a pre-determined dead-band, the rods movement will become necessary at that time so that the power error is within limits.

- The display information on this screen provides the important information regarding reactivity changes as shown by the various reactivity feedback effects - void density; xenon; fuel temperature, coolant temperature, as well as the control rods reactivity changes as a result of their movement in the core. Note that reactivity is a computed not a measured parameter, it can be displayed on a simulator but is not directly available at an actual plant. Also note that when the reactor is critical the total reactivity must be zero.

- Note that the BWR plant is always operating with turbine-following-reactor mode.

- The buttons at the top of the screen allow the user to perform a "manual" "rods run-in", as well as "manual" reactor scram.

- The "HOLD POWER" button near the top left hand corner allows the user to "suspend" reactor power changes at any time. Just pressing the button once will result in the Demanded Power Setpoint being set to "frozen", if it was increasing or decreasing initially.

- Near the bottom of the middle section of the screen is the button that can switch the controls rods "AUTO/MANUAL".

3.5 BWR SCRAM PARAMETERS SCREEN

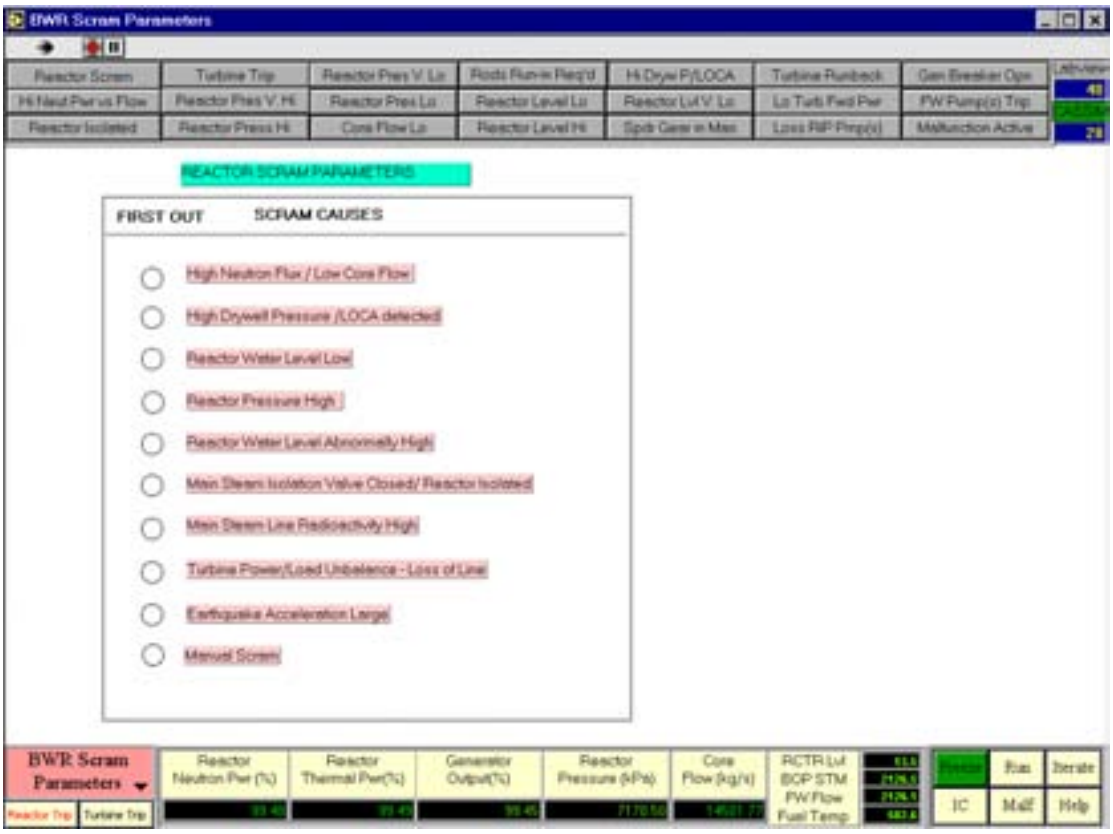

This screen shows all the parameters that will cause reactor scrams:

- High neutron flux/low core flow - as described previously, if at any time the current power exceeds 113% of the power designed for the current flow rate (in accordance with the maximum power-flow line as described above), the reactor will be scrammed.
- High drywell pressure/LOCA detected — if the drywell pressure exceeds 103 KPa, then the LOCA logic senses that a LOCA condition has occurred.
- Reactor level low — the scram setpoint is 11 meters above reactor bottom. Normal level is 13.5 meters above reactor bottom.
- Reactor pressure high — the scram setpoint is 7870 KPa. Normal reactor pressure is 7170 KPa.
- Reactor level very high — the scram setpoint is 14.5 meters above reactor bottom.
- Main steam isolation valve closed/reactor isolated.
- Main steam line radioactivity high.
- Turbine power/load unbalance or loss of line (load rejection).
- Earthquake acceleration large.
- Manual scram.

3.6 BWR TURBINE GENERATOR SCREEN

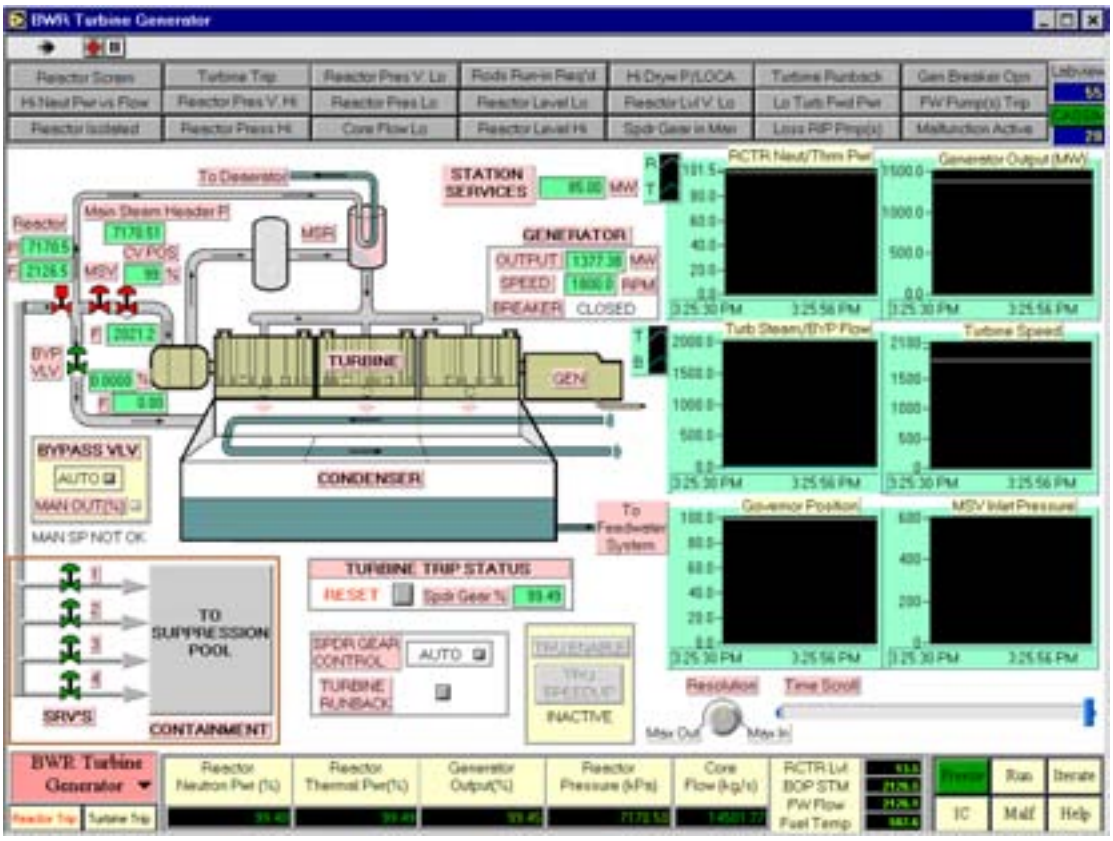

This screen shows the main parameters and controls associated with the turbine and the generator. The parameters displayed are:

- Reactor side main steam pressure and main steam flow (before the isolation valve); main steam isolation valve status
- Main steam header pressure after the main steam isolation valve.
- Status of main steam safety relief valves (SRVs)
- Status, opening and flow through the steam bypass valves
- Steam flow to the turbine (kg/sec)
- Governor control valve position (% open)
- Generator output (MW)
- Turbine/generator speed of rotation (rpm)
- Generator breaker trip status
- Turbine trip status
- Turbine control status
- All the trend displays have been covered elsewhere or are self explanatory

The following pop-up menus are provided:

- TURBINE RUNBACK — sets target (%) and rate (%/sec) of runback when ‘Accept’ is selected
- TURBINE TRIP STATUS — trip or reset
- Steam bypass valve ‘AUTO/MANUAL’ control — AUTO select allows transfer to MANUAL control, following which the manual position of the valve may be set.
- Computer control of the speeder gear must be in the 'Enable' mode since manual control of the speeder is not provided in this version of the simulator.
- Turbine runup/speedup controls

3.7 BWR FEEDWATER AND EXTRACTION STEAM SCREEN

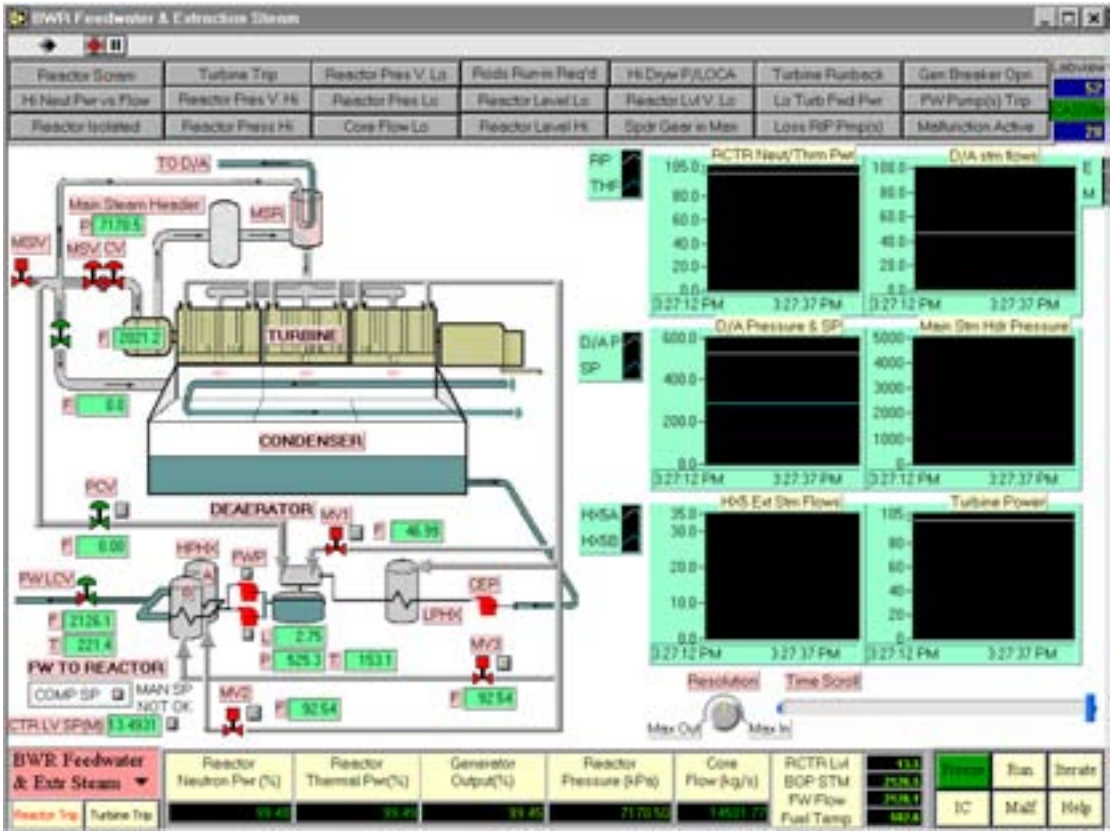

This screen shows the portion of the feedwater system that includes the deaerator, the boiler feed pumps, the high pressure heaters and associated valves, with the output of the HP heaters going to the reactor water level control valves. The following parameters are displayed:

- Main steam header pressure after the main steam isolation valve, steam flow through the turbine governor valve and the bypass valve.
- Deaerator level (m) and deaerator pressure (KPa); extraction steam motorized valve status and controls from turbine extraction, as well as pressure controller controls for main steam extraction to deaerator. The extraction steam flows are shown respectively for turbine extraction as well as for main steam extraction to the deaerator.

- Main feedwater pump and auxiliary feedwater pump status with associated pop-up menus for ‘ON/OFF’ controls.
- HP heater motorized valves MV2 and MV3 and pop-up menus for open and close controls for controlling extraction steam flow to the HP heaters.
- Flow rate at reactor level control valve outlet and feedwater temperature.

4. SIMULATOR EXERCISES

4.1 INTRODUCTORY EXERCISES

4.1.1 Power maneuver: 10% power reduction and return to full power

- Initialize simulator to 100% full power
- Verify that all parameters are consistent with full power operation.
  - ⇒ Go to "Reactivity & Setpoint" Screen
  - ⇒ Press RCTR PWR SETPOINT button
  - ⇒ In pop-up menu lower 'target' to 90.00% at a 'Rate' of 1.0%/sec
  - ⇒ 'Accept' and 'Return'
- Observe the response of the displayed parameters until the transients in reactor power and steam pressure are completed. Observe the power flow path on " Power Flow Map & Controls" screen.
- Continuing the above operation, raise "UNIT POWER" to 100% at a rate of 1.0%FP/sec.

4.1.2 Reduction to 0% full power and back to 100% full power

- Initialize the simulator to 100%FP, reduce power using 25% steps at 1%/sec and record the following values:

Parameter	Unit	100%	75%	50%	25%	0%	Comments
Reactor Power	%						
Core Flow Rate	Kg/s						
Coolant Temperature	°C						
Coolant Pressure at core exit	KPa						
Coolant Quality at core exit	%						
Reactor Level	m						
Reactor Steam Pressure	KPa						
Reactor Steam Flow	Kg/s						
Feedwater Flow	kg/s						
Turbine-Generator Power	%						

Under "Comments" please note type of parameter change as a function of reactor power 0% → 100% FP: constant, linear increase or decrease, non-linear increase or decrease. In particular, comment on the power — flow path during the power evolution, and comment if the path enters into particular regions in the power flow map.

- Increase reactor power back to 100% after ~ 0% is reached, using 25% steps and 1% per sec rate. Repeat the above recordings and comments.

4.1.3 Turbine trip and recovery

From a simulator Initial state of 100% full power, press the turbine trip button on the left hand bottom corner of the screen, and confirm turbine trip.

- Notice the power flow path on "Power Flow Map and Controls" screen
- What is reactor power when turbine speed settles at 5 rpm?
- What is the steam flow through the bypass valve on the turbine generator screen?
- What is the reactor pressure?
- Go to BWR turbine generator screen, reset turbine trip, select 'TRU ENABLE', and select "TRU Speedup" to synchronize the generator and load to about 10%FP;
- After turbine is in service, what happens to the steam bypass valve as the turbine power increases? Note the reactor pressure.
- After the turbine power is equal to reactor power, go to "Reactivity & Setpoints" to increase reactor power to 100% in 25% steps at 1% per sec.

4.1.4 Reactor scram and recovery

- Initialize the simulator to 100%FP
- Manually scram the reactor
- Observe the response of the overall unit. Describe and explain the following responses upon reactor scram:
  - (a) Recirculation core flow;
  - (b) Reactor pressure;
  - (c) The sub-cooled & boiling region boundary of core — explain the changes;
  - (d) Turbine load & bypass system.
- Wait until generator power is zero and reactor neutron power ~ 0.1%. Or alternatively instead of waiting, recall the Zero Power COLD IC "Zero_cld.ic" from the IC menu, and re-start from this IC plant condition.
- Reset reactor scram using control devices provided on "Power Flow Map & Controls" screen. Press the YES button next to SCRAM ST. (Reminder, after pressing the reactor reset pushbutton, it is necessary to press the SCRAM RESET button to begin rods withdrawal).
- Record the time (using the display under the chart recorders) needed to withdraw all rods to Reset line.

- Go to “Reactivity & Setpoint” Screen; record the net total reactor reactivity.
- Is the reactor subcritical, critical or supercritical?
- Enter a new power setpoint say 10%, at a rate of 10% present power per sec. and observe any changes in control rods reactivity. The rods should be withdrawing. Otherwise, go to the power flow map & controls screen, and press the “SCRAM RESET” Button again, you should see the “down” arrows showing the rods movement.
- Observe the response of the reactor regulating system and the reactivity changes that take place
- Continue to raise power to 60% FP in 25% steps at 10% present power per sec. Note after 20% FP is reached, you can enter 1% FP per sec. as the rate.
- If the turbine is tripped as a result of low power, reset turbine trip, synchronize and reload as described in previous section.

4.2 MALFUNCTION EXERCISES

4.2.1 Loss of feedwater - both FW pumps trip.

Go to BWR Feedwater & Extraction Steam Screen. Load the 100% FP IC, then insert the above malfunction. This malfunction leads to total loss of feedwater to the Reactor Pressure Vessel.

When this malfunction transient occurs:

- On BWR Feedwater & Extraction Steam Screen, observe that both the feedwater pumps stop.
- Go to Power/Flow Map Screen. The reactor level drops quickly due to loss of feedwater flow.
- Dome pressure is decreasing gradually as reactor water level drops. Provide explanation why this is happening.
- The drop in dome pressure will cause more boiling in core (why?), hence the steam quality increases; same with void fraction. Increase in void fraction will result in more negative reactivity. Thus reactor power decreases.
- As dome pressure drops, the turbine inlet pressure also drops. In order to restore the Reactor Pressure at setpoint, the Reactor Pressure Controller closes the turbine governor valve slightly. As a result, the generator MW drops.
- As reactor power decreases, the Reactor Power Controller will try to increase power by increasing recirculation flow, as well as by withdrawing the control rods out of core
- Note the movement of the yellow cursor in the Power/Flow Map.
- After a short while, the Reactor will be scrammed by low water level (11 M above the reactor bottom).
- Emergency Core Cooling (ECC) will be activated on a low reactor level, and the reactor will be isolated.

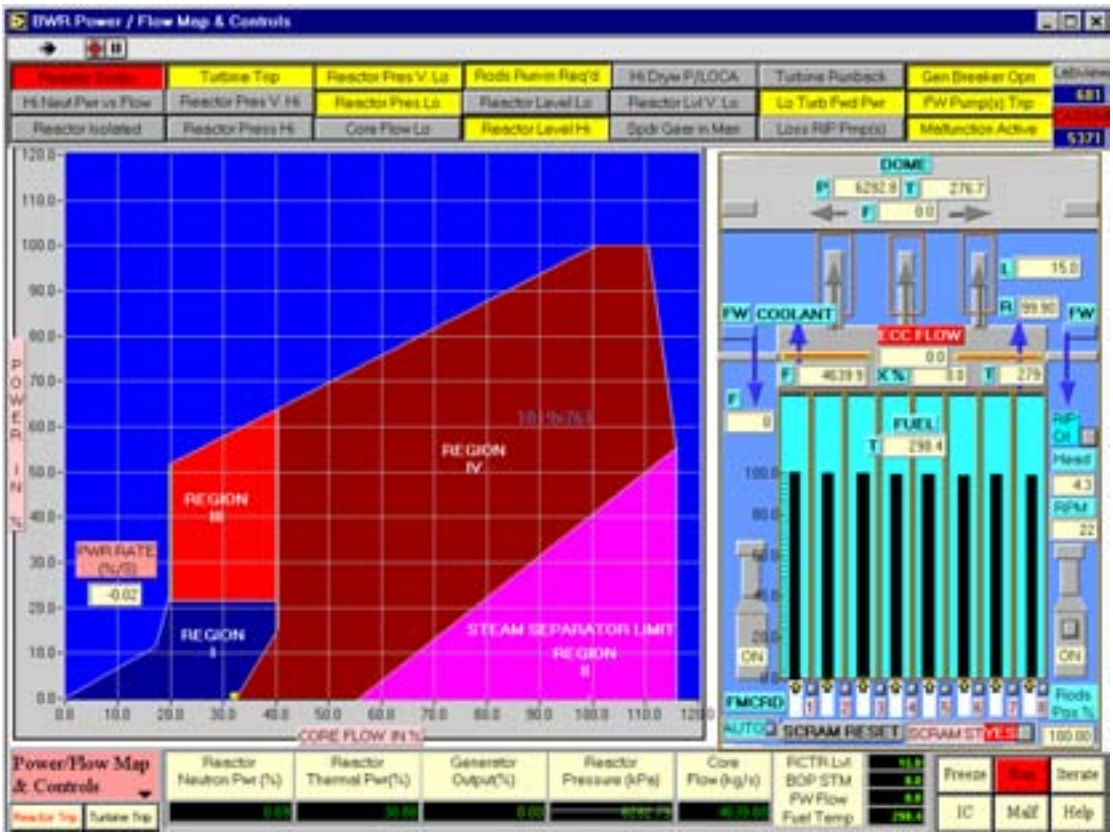
BWR Power / Flow Map & Controls
Turbine Trip
Reactor Press V. Lo
Rods Pull-in Req'd
Hi Drywl P/LOCA
Turbine Runback
Gen Breaker Opn
Hi Neut Pwr vs Flow
Reactor Press V. Hi
Reactor Press Lo
Reactor Level Lo
Reactor Lvl V. Lo
Lo Turb Fwd Pwr
RW Pump(s) Trip
Reactor Isolated
Reactor Press Hi
Core Flow Lo
Reactor Level Hi
Dpdr Gate in Man
Loss RIP Pmp(s)
Malfunction Active
POWER IN %
CORE FLOW IN %
REGION III
REGION IV
REGION I
REGION II
STEAM SEPARATOR LIMIT
PWR RATE (%/S)
-0.02
DOME
COOLANT
ECC FLOW
FUEL
FW
RIP Off
Head
RPM
ON
FMCRD
AUTO
SCRAM RESET
Rods Pos %
Power/Flow Map & Controls
Reactor Neutron Pwr (%)
Reactor Thermal Pwr(%)
Generator Output(%)
Reactor Pressure (kPa)
Core Flow (kg/s)
RCTR Lvl
BOP STM
FW Flow
Fuel Temp
Freeze
Run
Iterate
IC
Malf
Help

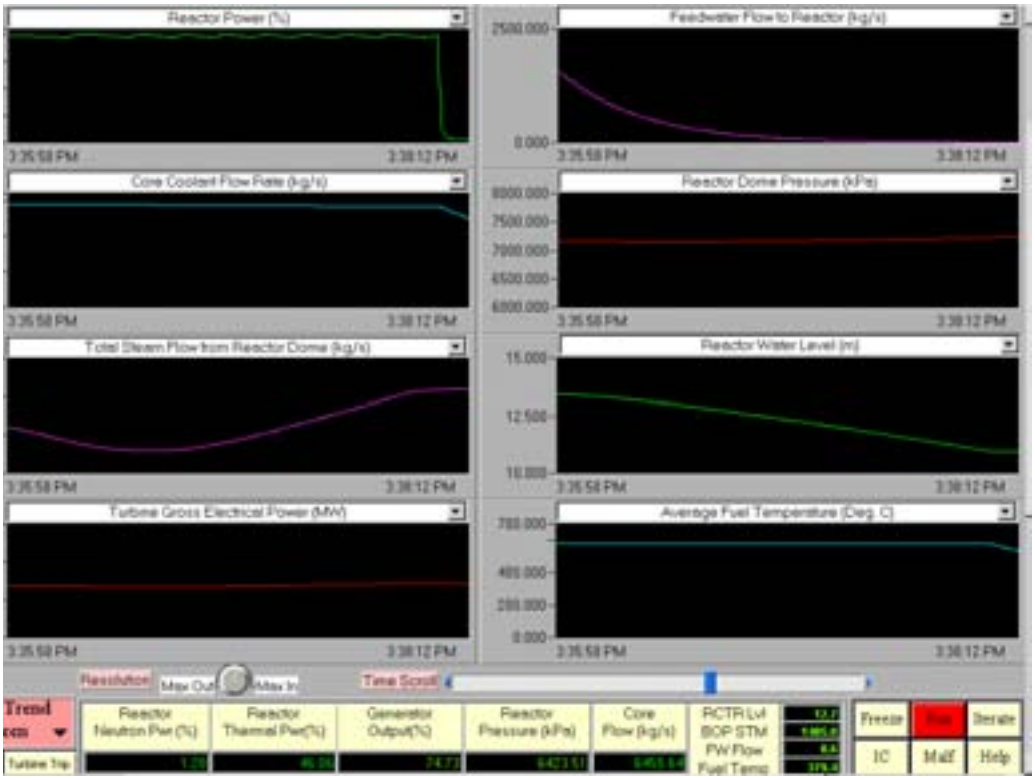
Reactor Power (%)
Feedwater Flow to Reactor (kg/s)
Core Coolant Flow Rate (kg/s)
Reactor Dome Pressure (kPa)
Total Steam Flow from Reactor Dome (kg/s)
Reactor Water Level (m)
Turbine Gross Electrical Power (MW)
Average Fuel Temperature (Deg. C)
3:35:58 PM
3:38:12 PM
Resolution
Max Out
Max In
Time Scroll
Trend
Reactor Neutron Pwr (%)
Reactor Thermal Pwr(%)
Generator Output(%)
Reactor Pressure (kPa)
Core Flow (kg/s)
RCTR Lvl
BOP STM
FW Flow
Fuel Temp
Freeze
Run
Iterate
IC
Malf
Help

4.2.2 Increasing core flow due to flow control failure

Go to Power/Flow Map. Load the 100% FP IC. Run the simulator. Note that this malfunction causes the recirculation flow controller to fail in such a way that the process variable input for the controller fails in “low” value. But the flow transmitter reading for display is normal. The consequence is that the Recirculation Flow Control System is “fooled” into thinking that the recirculation flow is lower than the flow setpoint, hence it will increase the speed of the Reactor Internal Pumps (RIPs) to increase flow.

Now insert the malfunction. When this malfunction transient occurs:

- On the Power/Flow Map Screen, observe the movement of the yellow cursor.
- Observe that the coolant flow is increasing. As coolant flow increases, core quality X (%) decreases. Provide explanation.
- As core quality decreases, so does void fraction. As a result, the reactor neutron flux increases. Provide explanation.
- As soon as the reactor power exceeds the target setpoint, the Reactor Power Control system will attempt to decrease reactor power by inserting control rods.
- Observe that the cursor moves beyond the operating path on the Power/Flow Map.

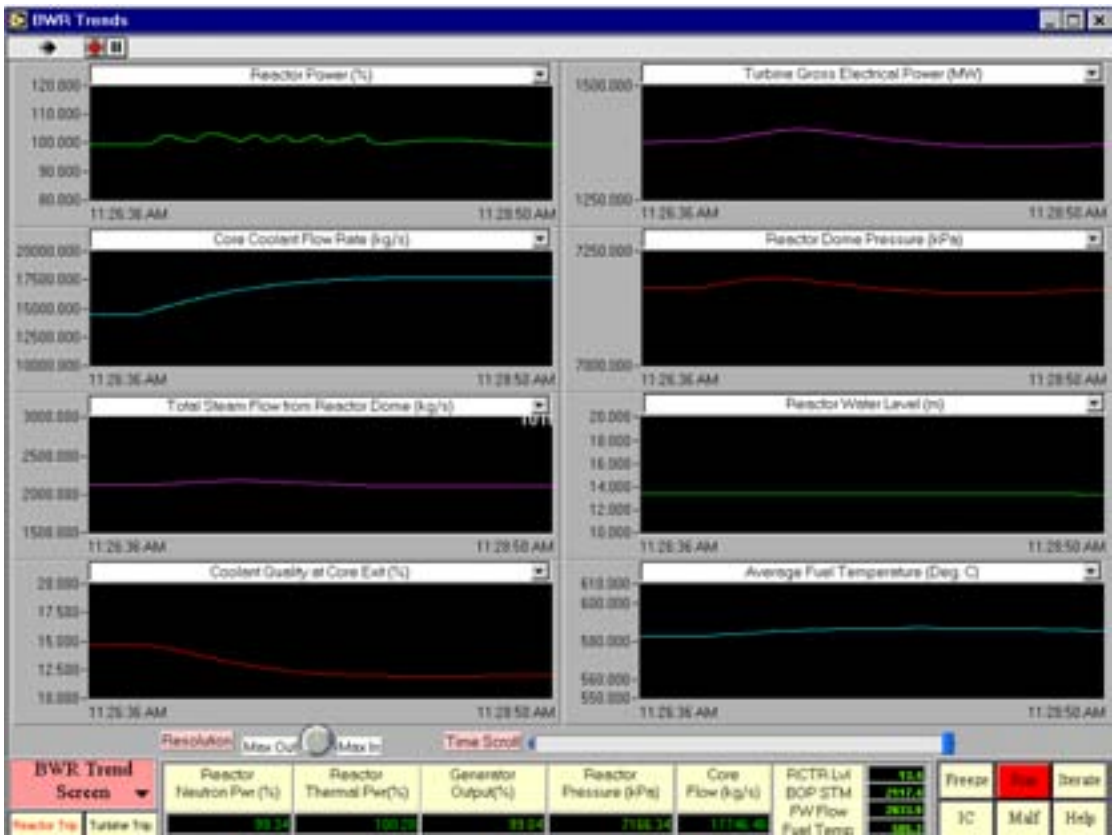

4.2.3 Decreasing core flow due to flow control failure

Go to Power/Flow Map Screen. Load the 100% FP IC. Run the simulator. Note that this malfunction causes the recirculation flow controller to fail in such a way that the process variable input for the controller fails in “high” value. But the flow transmitter reading for display is normal. The consequence is that the Recirculation Flow Control System is “fooled” into thinking that the recirculation flow is higher than the flow setpoint, hence it will decrease the speed of the Reactor Internal Pumps (RIPs) to decrease flow.

Now insert the malfunction. When this malfunction transient occurs:

- On Power/Flow Map screen, observe the movement of the yellow cursor.
- Observe that the coolant flow is decreasing. As coolant flow decreases, core quality X (%) increases. Provide explanation.
- As core quality increases, so does void fraction. As a result, the reactor neutron flux decreases. Provide explanation.
- As soon as the reactor power is lower than the target setpoint, the Reactor Power Control system will attempt to increase reactor power by withdrawing control rods.
- But the rate of flow decrease is faster than the reactor power adjustment; hence the cursor is above the normal operating path on the Power/Flow Map. Observe the alarm “Hi Neut Pwr vs Flow”.
- As the malfunction event evolves, the cursor moves into the “unstable region III” and sits on top of it. Observe that the rods are almost fully withdrawn.
- The reactor pressure is decreasing and low-pressure alarms come on. Explain why Reactor Pressure Control cannot increase reactor pressure back to setpoint.
- As well, there is an alarm “ Turbine runback”. Explain why there is a turbine runback.

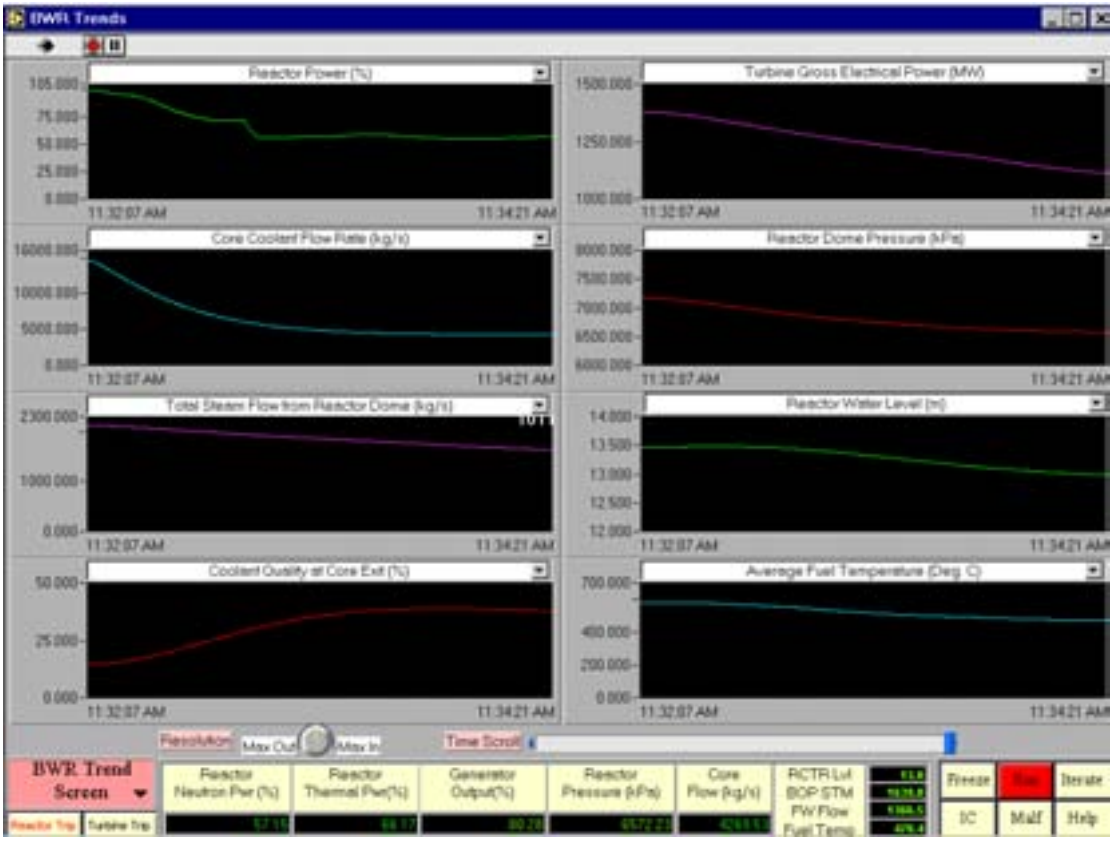

4.2.4 Decreasing steam flow from dome due to pressure control failure

Go to the Power/Flow Map. Load the 100% FP IC. Run the simulator. Note that this malfunction causes the Reactor Pressure Controller to fail in such a way that the process variable input for the controller fails in "low" value. But the pressure transmitter reading for display is normal. The consequence is that the Reactor Pressure Control System is "fooled" into thinking that the reactor pressure is lower than the pressure setpoint of 7170 KPa, therefore it will increase coolant flow rate to raise power in order to increase steam flow. At the same time, the Turbine Control system, thinking that main steam pressure is "low", will decrease opening of the turbine governor valve. Hence steam flow to turbine will decrease. Thus the generator load is decreasing.

Now insert the malfunction. When this malfunction transient occurs:

- On the Power/Flow Map Screen, observe the movement of the yellow cursor and record the reactor pressure reading - increasing or decreasing, as the malfunction event evolves.
- Observe that the coolant flow is increasing. Provide explanation.
- As coolant flow increases, core quality X (%) decreases. Provide explanation.
- As core quality decreases, so does void fraction. As a result, the reactor neutron flux increases. Provide explanation.
- As soon as the reactor power is higher than the target setpoint, the Reactor Power Control system will attempt to decrease reactor power by inserting control rods.
- Note the Generator Output (%) reading at the bottom of the screen - increasing or decreasing? Provide explanation. Compare this with the Reactor Thermal power (%). What is the difference? Where does this power difference go to?
- As the malfunction event evolves, the reactor pressure increases, and an alarm "Reactor Press Hi" will come on. But after a short while, it will disappear, then sometime later it will reappear again. Provide explanation why this is the case.
- As this malfunction further evolves, alarm "Rods Run-in Required" will come on. Observe the movement path of the yellow cursor. Provide explanation.
- Discuss what should the operator do in this event.

4.2.5 Increasing steam flow from dome due to pressure control failure

Go to Power/Flow Map Screen. Load the 100% FP IC. Run the simulator. Note that this malfunction causes the Reactor Pressure Controller to fail in such a way that the process variable input for the controller fails in "high" value. But the pressure transmitter reading for display is normal. The consequence is that the Reactor Pressure Control System is "fooled" into thinking that the reactor pressure is higher than the pressure setpoint of 7170 KPa, therefore it will decrease coolant flow rate to decrease power in order to decrease steam flow. At the same time, the Turbine Control system, thinking that main steam pressure is "high", will increase opening of the turbine governor valve. But the turbine governor valve is almost at the 100% fully open position.

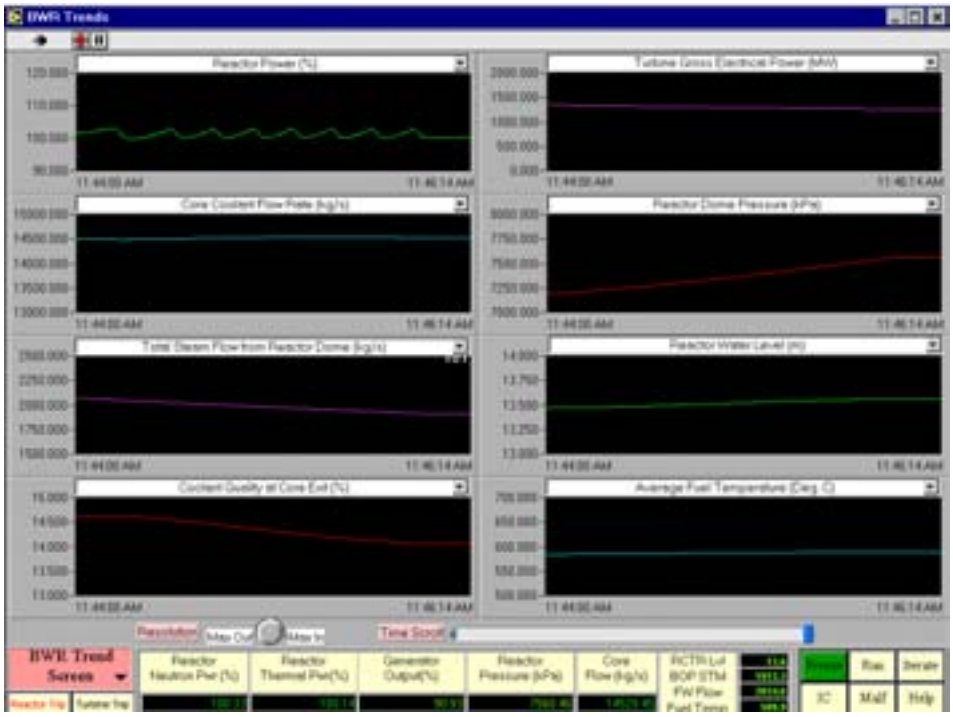

Now insert this malfunction. When this malfunction transient occurs:

- On the Power/Flow Map Screen, observe the movement of the yellow cursor and record the reactor pressure reading - increasing or decreasing, as the malfunction event evolves.
- Observe that the coolant flow is decreasing. Provide explanation why this is so.
- As coolant flow decreases, core quality X (%) increases. Provide explanation.
- As core quality increases, so does void fraction. As a result, the reactor neutron flux decreases. Provide explanation.
- Reactor pressure will be decreasing further, causing low-pressure alarm “Reactor Pres Lo”, as well as turbine runback. Provide explanation why turbine is running back.
- As soon as the reactor power is lower than the target setpoint, Reactor Power Control system will attempt to increase reactor power by withdrawing control rods.
- Note the Generator Output (%) reading at the bottom of the screen - increasing or decreasing? Provide explanation. Compare this with the Reactor Thermal power (%). What is the difference? Where does this power difference go to?
- As the malfunction event evolves, the reactor pressure further decreases, and an alarm “Reactor Pres V. Lo” will come on.
- Discuss what should the operator do in this event.

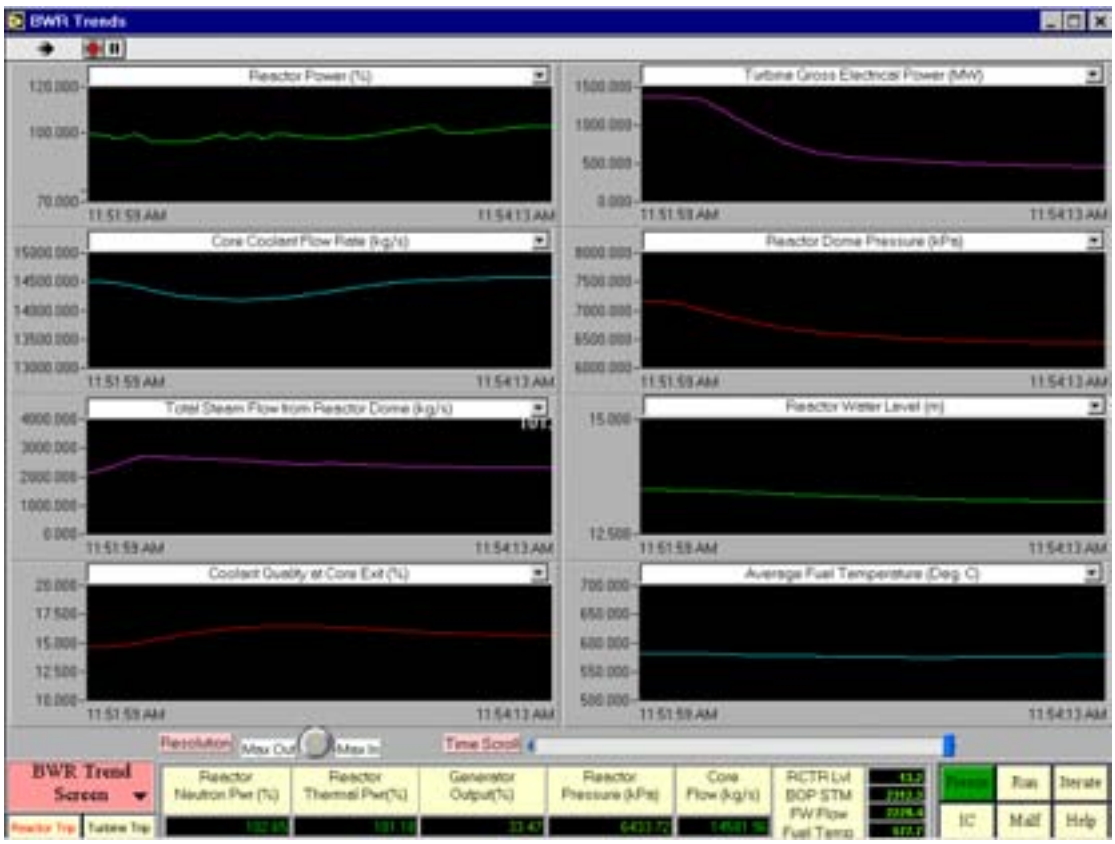

4.2.6 Turbine throttle PT fails low

Go to Power/Flow Map. Load the 100% FP IC and run the simulator. Note that this malfunction causes the turbine throttle pressure transmitter to fail “low”. The consequence is that the turbine governor control system is “fooled” into thinking that the main steam pressure is rapidly decreasing, hence as a regulation control action, the turbine governor will run back turbine load immediately in order to maintain main steam pressure, which in actual fact, is not “low”. The consequence is that the reactor pressure immediately shoots up rapidly.

Now insert this malfunction. When this malfunction transient event occurs:

- On the Power/Flow Map Screen, observe the movement of the yellow cursor on the screen.
- Provide the explanation why the power increases so rapidly.
- As the power increases, it exceeds the maximum allowable limit given by the current core flow as per the Power/Flow Map. Therefore, “Hi Neut Pwr vs Flow” alarm is generated. While this is happening, Reactor Power Control System is inserting the control Rods, trying to reduce reactor power.
- But the reactor power increase is so fast that it exceeds the safety protection limits - first the “Rods Run-in Req’d” is activated, followed by Reactor Scram by “High Neutron Flux/Low Core Flow”, and “Reactor Pressure High”.

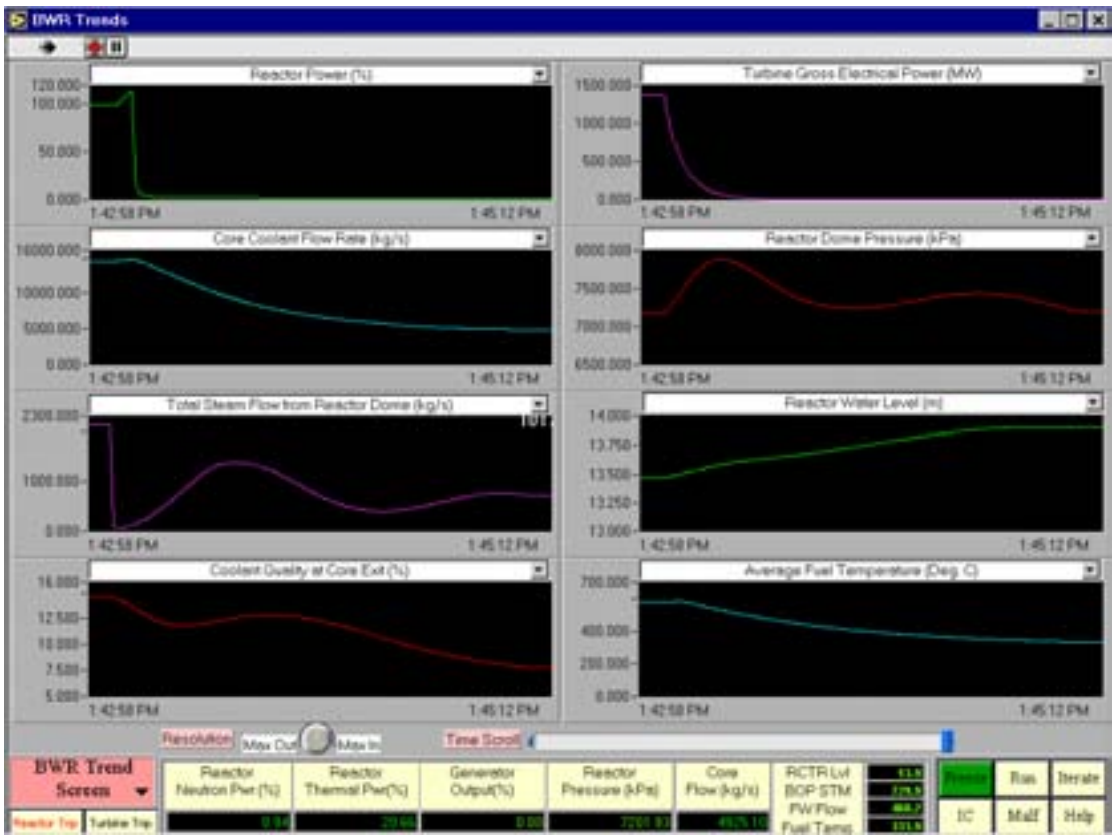

4.2.7 Safety relief valve (SRV) on one main steam line fails open

Go to BWR Turbine Generator Screen. Load the 100% FP IC. Run the simulator. Note that this malfunction causes the safety relief valve (SRV) on one main steam line to fail open. The consequence is that reactor pressure falls immediately.

Insert the malfunction. When this malfunction transient occurs:

- On the BWR Turbine Generator Screen, observe that SRV #1 opens to the suppression pool, and also note that turbine runback is initiated.
- Freeze the simulator. Go to Power/Flow Map. Reinitialize the simulator to 100% FP Initial Condition (IC). Run the simulator
- Insert the malfunction again and observe the movement of the yellow cursor on the screen.
- Reactor power decreases initially in responses to pressure drop. Why?
- Because the reactor power drops below setpoint, the reactor power control system will withdraw the control rods, trying to restore power. But the pressure drop is too fast and alarm “Reactor Pres Lo” is generated.
- When the transient settles down a bit, note the following parameters: reactor pressure, generator output (%), reactor neutron power (%).
- Discuss what should the operator do.

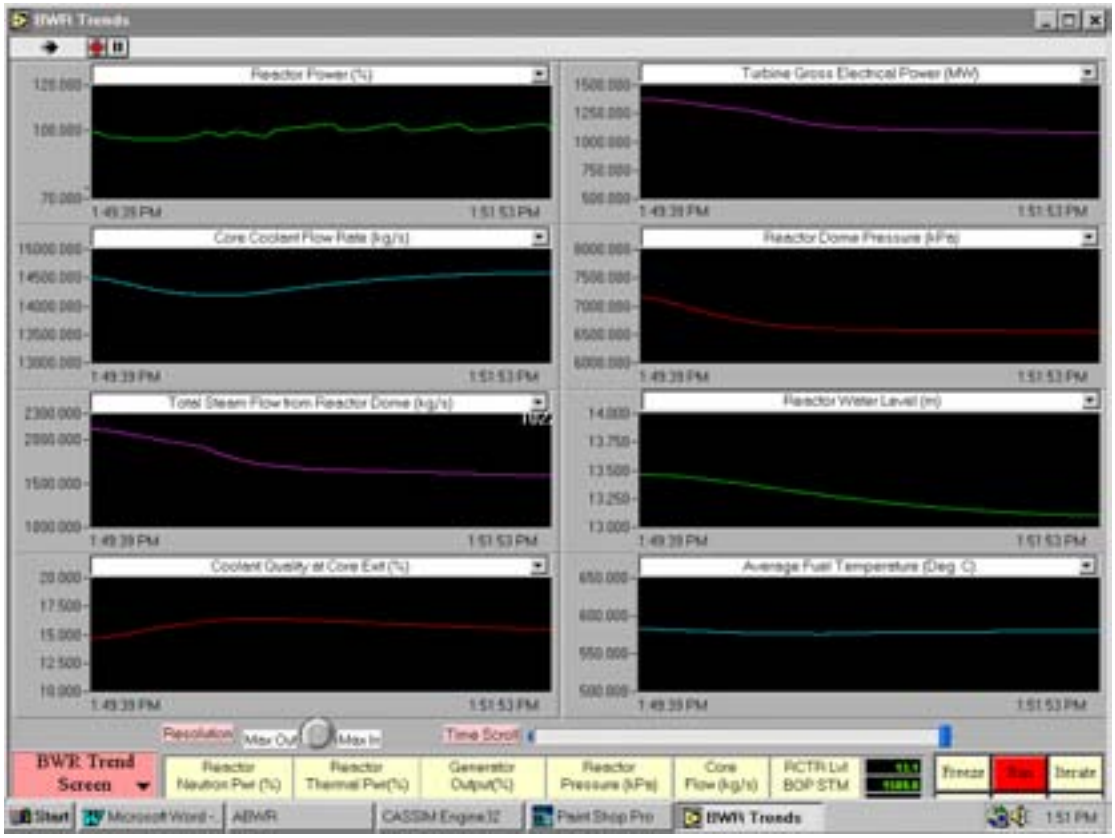

4.2.8 Feedwater level control valve fails open

Go to BWR Feedwater & Extr Steam Screen. Load the 68% FP IC. Run the simulator. Note that this malfunction causes the Feedwater Level Control Valve to fail open 100%. The consequence is that reactor water level will increase immediately.

Insert the malfunction. When this malfunction transient occurs:

- On the BWR Feedwater & Extr Steam Screen, observe that FW LCV flow is increasing.
- Go to Power/Flow Map Screen; observe the movement of the yellow cursor on the screen. Note the reactor water level, reactor neutron power, reactor pressure, FW flow.
- Let the malfunction event runs for about 5 minutes. Note the reactor water level, reactor neutron power, reactor pressure, FW flow.
- Reactor water level has increased, due to the imbalance between the steam flow and the feedwater flow. Has Reactor pressure increased or decreased? Has reactor neutron power increased or decreased? Provide explanation.
- Observe any movement of control rods and provide explanation why this is happening.
- If the malfunction is left running for some time, there will be a ”Reactor Level Hi” alarm, followed by reactor scram on reactor high level. Confirm this by going to BWR Scram Parameters Screen, after the reactor scram has occurred.

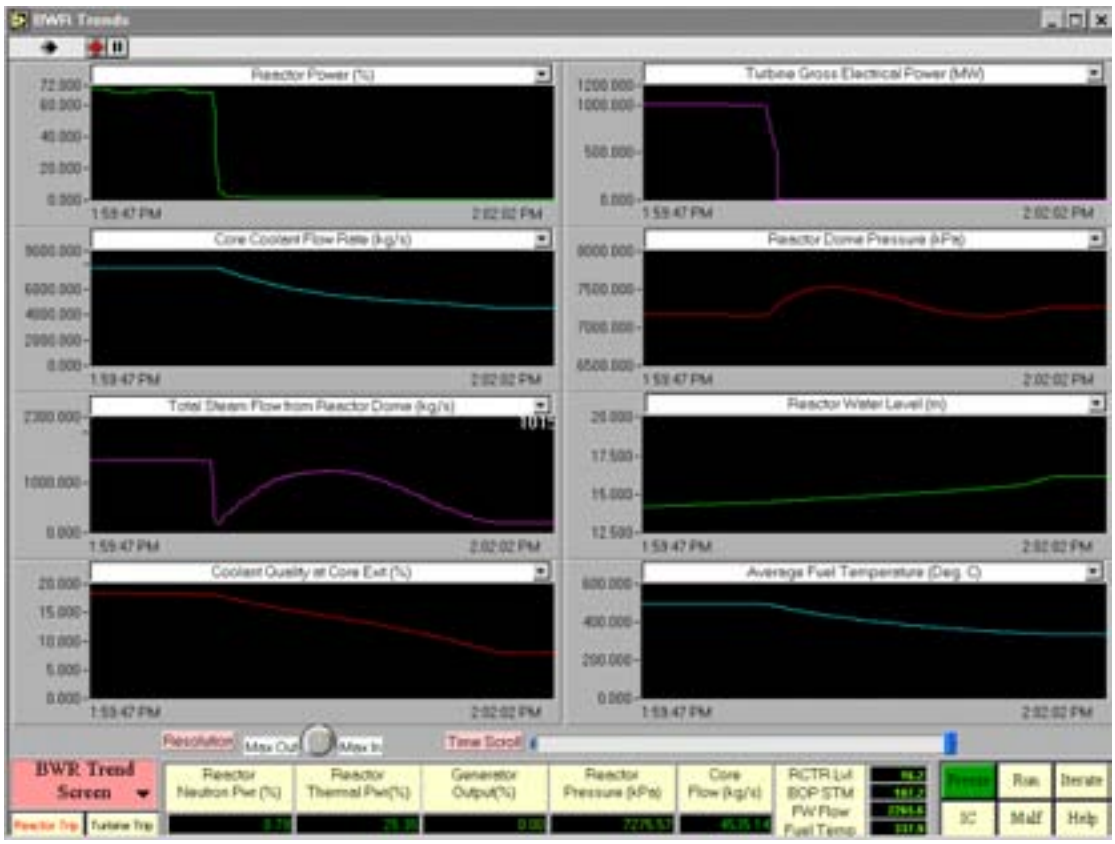

4.2.9 Turbine trip with bypass valve failed closed

Go to BWR Turbine Generator Screen. Load the 100% FP IC. Run the simulator. Note that this malfunction causes two failures to occur at the same time: (1) turbine trip (2) the turbine steam bypass valve failed closed. The consequence is that the reactor will have high steam pressure, and the safety relief valves (SRVs) will open to the suppression pool in order to relieve the steam pressure.

Insert this malfunction. When this malfunction transient occurs:

- On the BWR Turbine Generator Screen, observe that turbine main stop valve (MSV) and the bypass valve (BYP VLV) are closed. Alarms indicate that the turbine is tripped
- Note the reactor pressure at the bottom of the screen and the “Reactor Press Hi” alarm.
- Note any SRV opening to suppression pool.
- Reactor pressure will rise rapidly, leading to “Reactor Pres. V. Hi” alarm, followed by reactor scram.
- Confirm the reactor scram parameter by going to the reactor scram parameter screen.

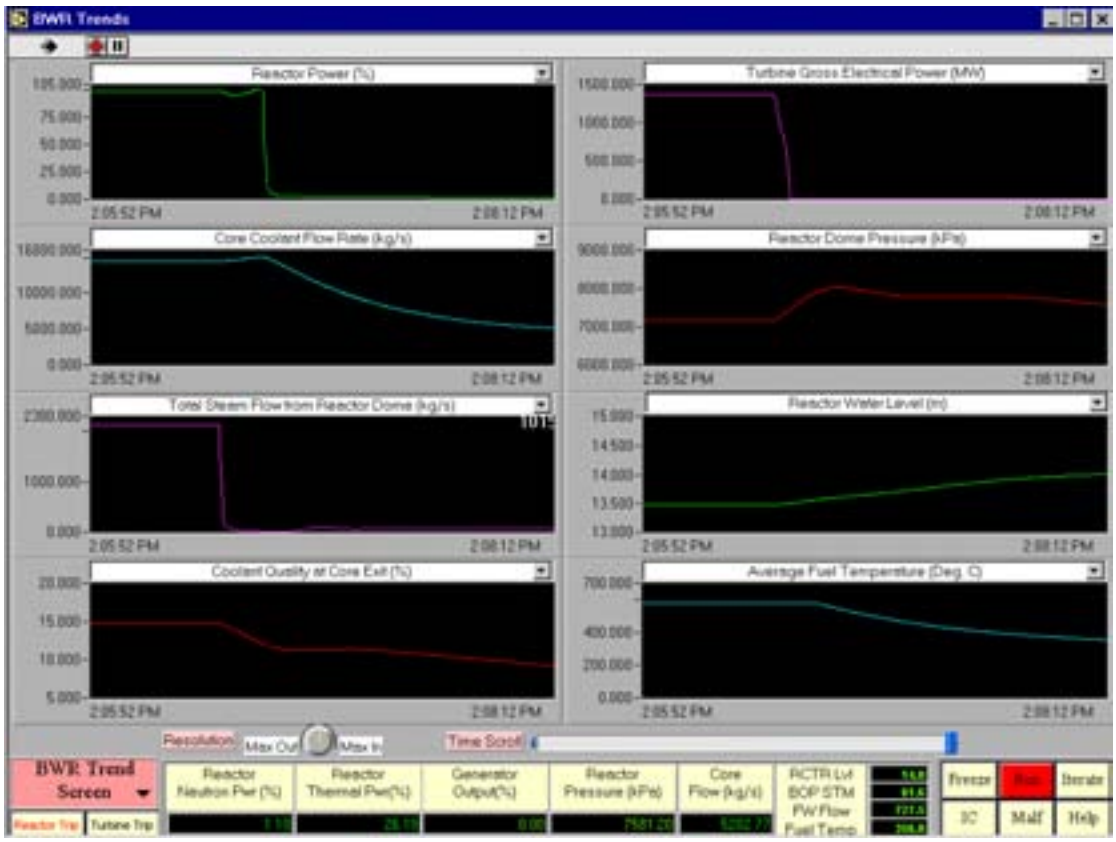

4.2.10 Inadvertent withdrawal of one bank of rods

Go to Power/Flow Map Screen. Load the 100% FP IC. Run the simulator. Note that this malfunction causes inadvertent withdrawal of control rods Bank #1. The consequence is that the reactor will suddenly have positive reactivity change due to the withdrawal of Bank #1 control rods.

Insert this malfunction. When this malfunction transient occurs:

- On the Power/Flow Map Screen, observe the movement of the yellow cursor.
- Note the arrow pointer for control rods Bank #1 and note its position in core. Observe that reactor power is increasing.
- In response to the reactor power increase, what would the reactor power control system do in order to compensate the sudden increase in power? Note the coolant flow rate and provide explanation.
- After the malfunction event runs for a while, the “Hi Neut Pwr vs Flow” alarm is generated. This is followed by the insertion of the control rods in the core to compensate for sudden increase in reactor power.
- Note the movement of the yellow cursor and note the control rods Bank # 1 position.
- Eventually Bank #1 control rods are fully withdrawn, and the transient is stabilized.

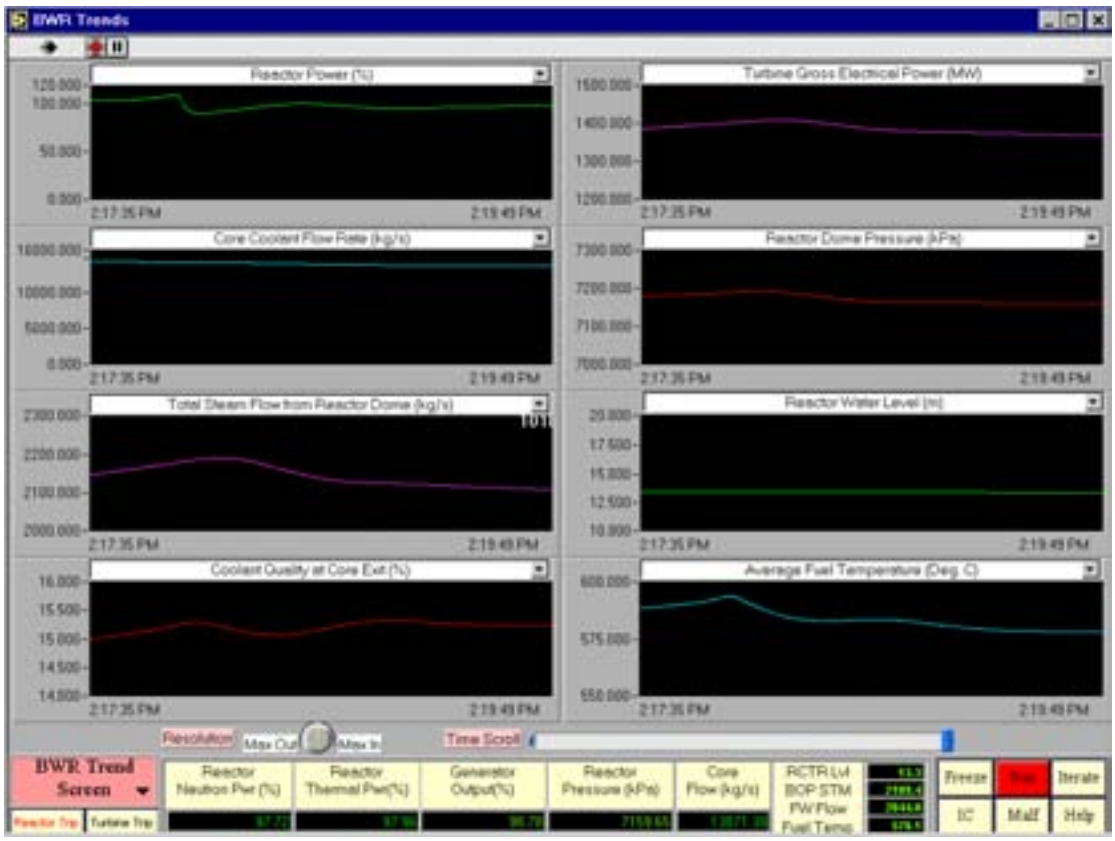

4.2.11 Inadvertent insertion of one bank of rods

Go to Power/Flow Map Screen. Load the 100% FP IC. Run the simulator. Note that this malfunction causes inadvertent insertion of control rods Bank #1. The consequence is that the reactor will suddenly have negative reactivity change due to the insertion of Bank #1 control rods.

Insert this malfunction. When this malfunction transient occurs:

- On the Power/Flow Map Screen, observe the movement of the yellow cursor.
- Note the arrow pointer for control rods Bank #1 and note its position in core. Observe that reactor power is decreasing.
- In response to the reactor power decrease, what would the reactor power control system do in order to compensate the sudden decrease in power? Note the coolant flow rate and provide explanation.
- As the reactor power is decreasing steadily due to the continuous insertion of Bank #1 control rods, note the coolant flow rate again when compared with previous measurement.
- The reactor power control system recognizes that increasing the coolant flow rate is unable to maintain reactor power that is decreasing steadily. Therefore it will ramp down the coolant flow rate in step with the reactor power decrease, in accordance with the recommended unit shutdown path in Power/Flow Map.
- Because the reactor power is reduced at a fast pace, reactor low pressure results, as shown by the alarm “Reactor Pres Lo”. Note the discrepancies between reactor neutron

power (%), reactor thermal power (%) and generator output (%) and provide explanation for the discrepancies.

- In response to low pressure in reactor dome, turbine control system will runback turbine in order to restore main steam pressure.

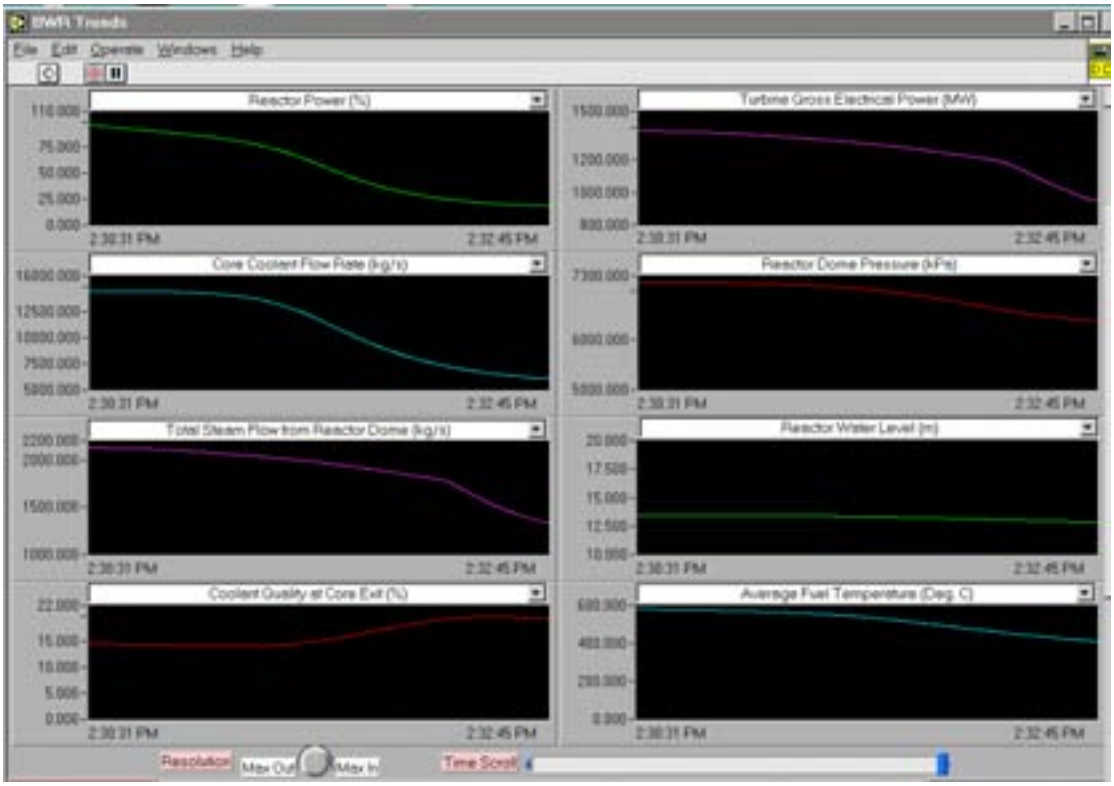

4.2.12 Inadvertent reactor isolation

Go to BWR Plant Overview Screen. Load the 100% FP IC and run the simulator. Note that this malfunction causes inadvertent closing of the reactor vessel isolation valve. The consequence is that the reactor vessel steam supply is isolated from the turbine generator.

Insert the malfunction. When this malfunction transient occurs:

- On the BWR Plant Overview Screen, observe the status of the reactor isolation valve.
- Note the steam flow from the reactor dome. Observe the status of SRV to suppression pool.
- At the bottom of the screen, note the following parameters, as the event evolves:

	10 sec.	30 sec.	1 minute	5 minutes
Reactor Power				
Generator Output				
Reactor Pressure				
Core flow				

- As the reactor isolation valve closes, the reactor pressure increases rapidly. As a result, “Reactor Press Hi” alarm is generated.

- Due to vapor void collapses on high pressure - hence less void fraction in core, there is a positive reactivity change. Therefore, reactor power increases.
- Because reactor power increases beyond the power limit allowable by the Power/Flow Map, “Rods Run-in “ protection is activated, hence the alarm is generated. The reactor power is decreased in response to the control rods insertion.
- Because of losing steam flow to the turbine generator, the generator output (%) is decreasing, and subsequently the turbine is tripped due to low Turbine forward power.
- When the reactor isolation valve is fully closed, the reactor is scrammed due to reactor isolation. Confirm this by reviewing the BWR scram parameter screen.
- Repeat this malfunction by re-initializing to 100% FP IC. But this time go to the Power/Flow Map screen and observe the movement of the yellow cursor.

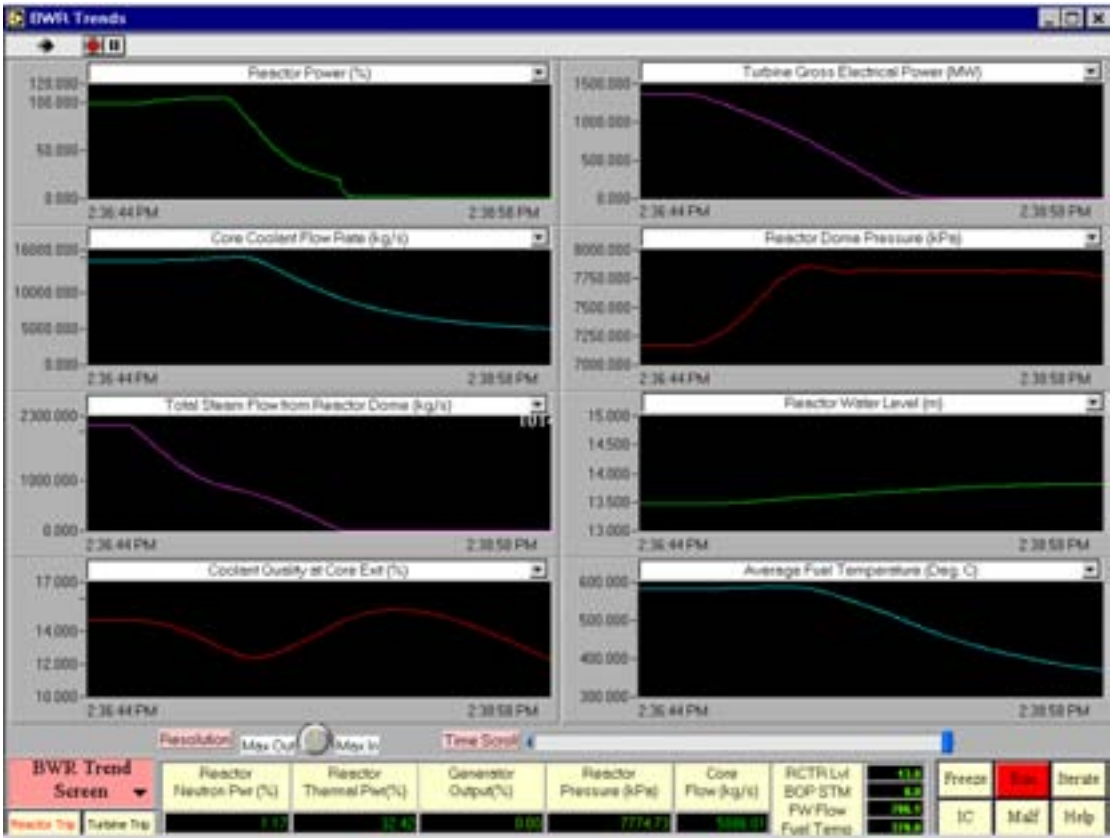

4.2.13 Loss of feedwater heating

Load the 100% FP IC. Run the simulator.

- Go to BWR Feedwater & Extr Steam Screen. Record the extraction steam flows to Deaerator and HP heaters. Record the feedwater temperature going to the reactor.
- Insert the above malfunction. This malfunction causes all the extraction steam valves to close — namely, MV1, MV2, and MV3. The consequence is total loss of feedwater heating.
- Record the following parameters as the malfunction event evolves:

	1 minute	3 minutes	5 minutes	7 minutes	10 minutes
Reactor Power (%)					
Generator Power (%)					
FW Temp (°C)					
Reactor Pressure (KPa)					
Core Flow (Kg/s)					

- Observe that generator output (%) is increasing. This is due to the fact that the steam, which is supposed to be used for feedwater heating, is now used to do work on turbine. Hence the generator output (%) increases.
- Does the reactor power change at this time?
- How much does the feedwater temperature drop since the malfunction event begins?
- Colder feedwater temperature into the reactor core means that the coolant becomes more subcooled. Hence the non-boiling height will increase. When the two-phase coolant mixes with a more subcooled feedwater in the downcomer, the effect is less channel quality, and therefore less void fraction. The result is a positive reactivity change. Hence the reactor power increases after the malfunction event runs for some time.
- But the reactor power increase is above the target setpoint, therefore control rods are inserted momentarily to decrease reactor power.
- Over time, the system will reach a new thermodynamic equilibrium state with the new steady state feedwater temperature, where reactor power and the generator power will be equal again.

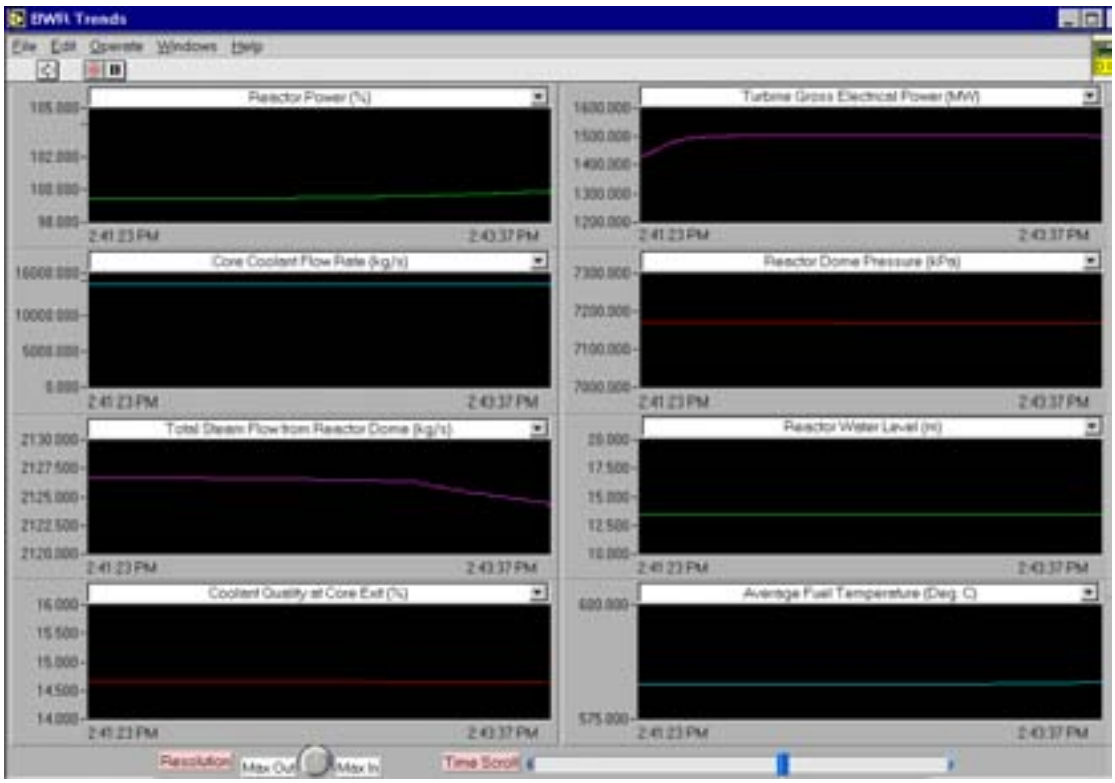

4.2.14 Power loss to three reactor internal pumps (RIPs)

Note that there are 10 reactor internal pumps (RIPs). This malfunction causes the loss of power to three RIPS, resulting in a sudden and large reduction of core flow.

- Go to Power/Flow Map Screen. Load the 100% FP IC and run the simulator. Record the core flow.
- Then insert the above malfunction. Observe the movement of the yellow cursor on the screen. Record the core flow as the malfunction event evolves.
- How does the yellow cursor travel on the Power/Flow Map? The alarm “Hi Neut Pwr versus Flow” is generated. Provide explanation for this alarm.
- After a step reduction in core flow, there is a substantial increase in void density in core, hence a negative reactivity change. The reactor power will decrease accordingly.
- One can observe that the reactor power drop is more than the power setpoint given by the core flow at that time, as determined by the recommended path on the Power/flow map. Therefore, the reactor power control system will increase reactor power by withdrawing control rods, in order to bring the cursor back to the optimum path on the Power/Flow Map.
- The transient will settle at about 89% FP, with core flow of 11,965 Kg/sec.

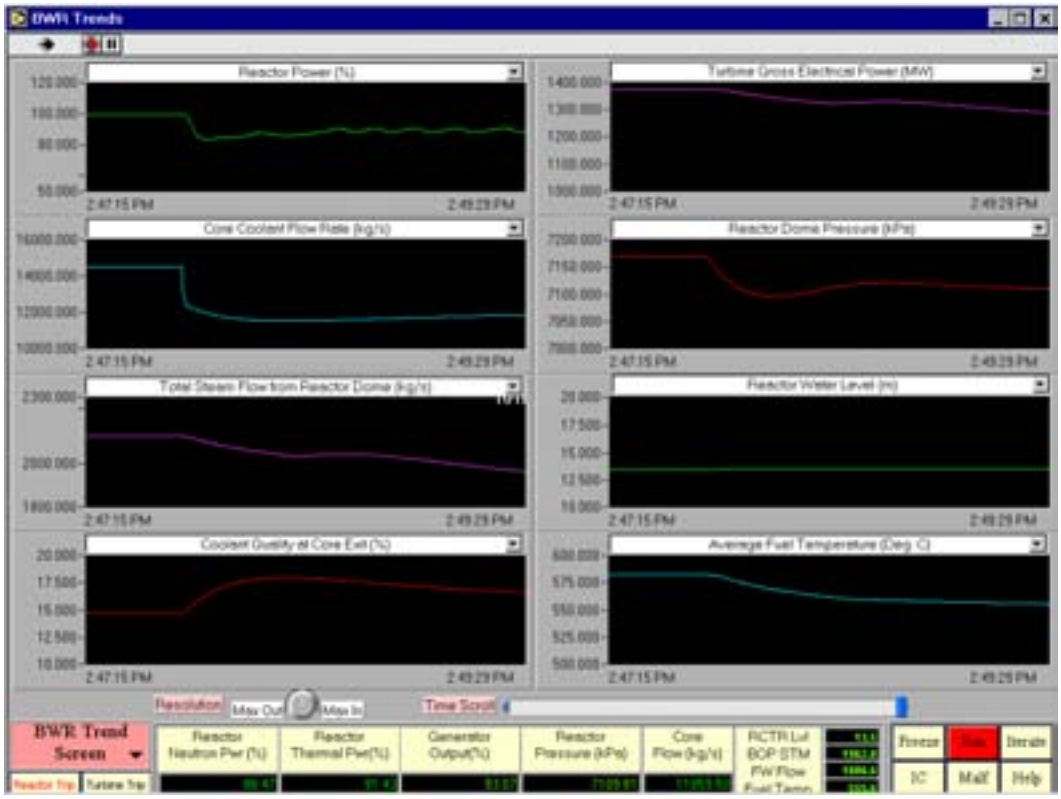

4.2.15 Steam line break inside drywell

- First go to Power/Flow Screen and load the 100% FP IC. Run the simulator.
- This malfunction causes a main steam line break in the main steam line (before the main steam isolation valve) inside containment drywall.
- The break flow into the drywell will increase rapidly, resulting in depressurization of the reactor dome pressure, as well as pressurization of the drywell.
- The consequence is the detection of LOCA condition, which automatically activates the emergency core cooling (ECC) system to spray cooling water into the core for emergency cooldown.

Now insert the above malfunction. When this malfunction transient occurs:

- Record the following parameters as the malfunction event evolves:

	5 sec.	10 sec.	30 sec.	1 minute	5 minutes
Break Flow					
Reactor pressure					
Steam flow from dome					
Feedwater flow					
ECC activation - mark √ in column					
Coolant Temp					
Fuel Temp					
Reactor Power					

- As the reactor dome depressurizes, there is more boiling in core, hence more void. The result is a negative reactivity change, leading to reactor power decrease. Observe there is "Reactor Lo Pres" alarm.
- At the same time, the drywell is pressurized very quickly by the steam flow from the break. In a short time, LOCA is detected, and reactor is scrammed by "high drywell pressure/LOCA detected" trip logic.
- When LOCA is detected, emergency core cooling (ECC) is activated. FW pumps will also be tripped, when ECC is in service. At the same time, main steam isolation valve will close, in order to isolate the containment.
- Due to lack of steam flow, the turbine throttle pressure decreases rapidly, leading to turbine runback by the turbine s. The result is turbine trip by low turbine forward power (alarm "Lo Turb Fwd pwr")
- Go to BWR plant overview screen. Re-initialize the simulator with the 100% IC.
- Repeat the malfunction event, and observe the evolution of all the trended variables.

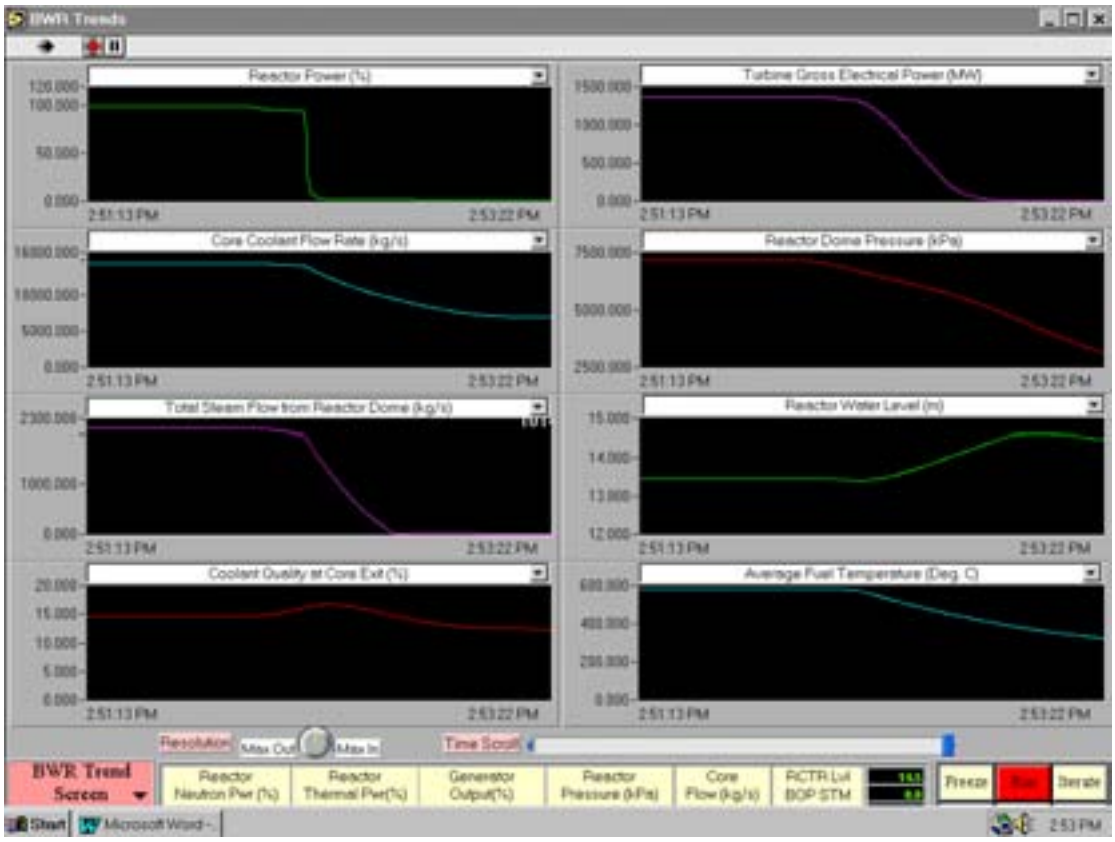

4.2.16 Feedwater line break inside drywell

- First go to Power/Flow Screen and load the 100% FP IC. Run the simulator.
- This malfunction causes a feedwater line break inside containment drywell.
- The feedwater break flow into the drywell will increase rapidly, resulting in pressurization of the drywell. The consequence is the detection of LOCA condition,

which automatically activates the emergency core cooling (ECC) system to spray cooling water into the core for emergency cooldown.

Now insert the above malfunction. When this malfunction transient occurs:

- Record the following parameters as the malfunction event evolves:

	5 sec.	10 sec.	30 sec.	1 minute	5 minutes
FW Break Flow					
Reactor pressure					
Steam flow from dome					
FW flow to core					
ECC activation - mark √ in column					
Coolant Temp					
Fuel Temp					
Reactor Power					

- At the onset of the feedwater line break, reactor water level drops, thus the steam volume in the dome increases. This in turn decreases the dome pressure slightly. As a result, void fraction in core increases slightly, leading to slight decrease in reactor power. That is why the yellow cursor on the screen moves downward.
- At the same time, the drywell is pressurized very quickly by the feedwater flow from the break. In a short time, LOCA is detected, and the reactor is scrammed by “high drywell pressure/LOCA detected” trip logic.
- When LOCA is detected, ECC is activated. FW pumps will also be tripped, when ECC is in service. At the same time, the main steam isolation valve will close, in order to isolate the containment.
- Due to the closing of the reactor isolation valve, the reactor pressure increases rapidly, resulting in “Reactor Press Hi” alarm, and the SRV will be opened to the suppression Pool.
- As well, as there is no steam flow going to turbine, the turbine throttle pressure decreases rapidly, leading to turbine runback by the turbine control system. The result is turbine trip by low turbine forward power (alarm “Lo Turb Fwd pwr”)
- Go to BWR Plant Overview Screen. Re-initialize the simulator with the 100% IC.
- Repeat the malfunction event, and observe the evolution of all the trended variables.

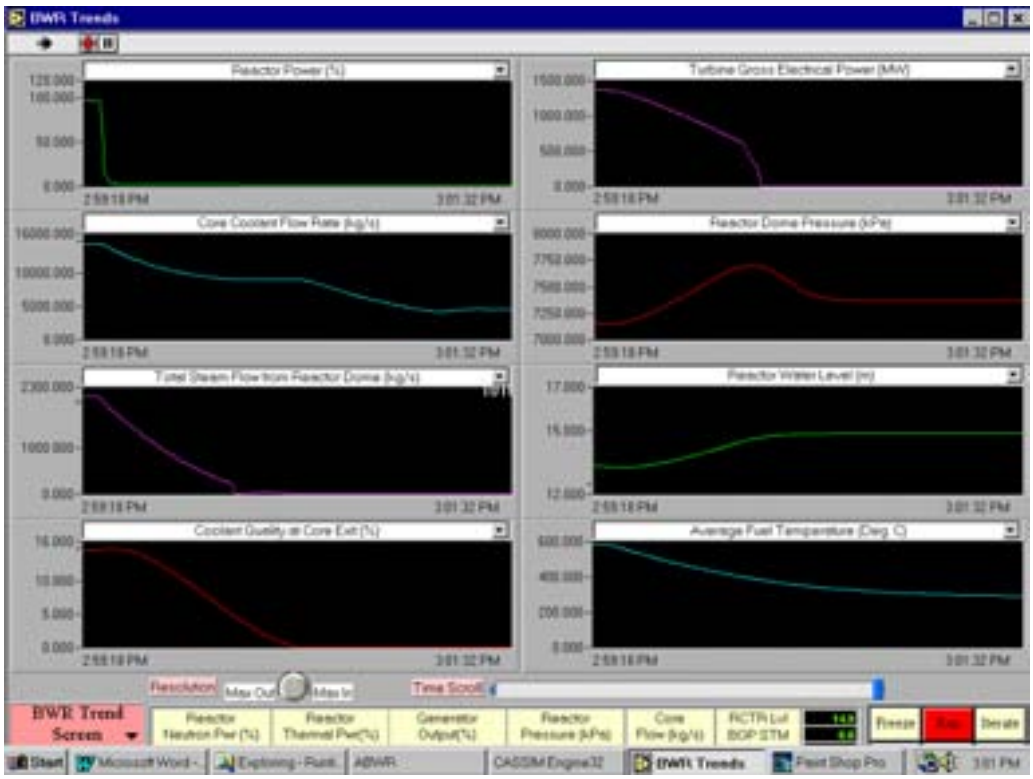

4.2.17 Reactor vessel bottom break - 3000 kg/sec LOCA

- First go to Power/Flow Screen and load the 100% FP IC. Run the simulator.
- This malfunction causes a “crack” opening at the Reactor Vessel bottom, resulting in a 3000 Kg/sec LOCA event.
- The break flow will pressurize the drywell rapidly.
- The consequence is the detection of LOCA condition, which automatically activates the ECC system to spray cooling water into the core for emergency cooldown.

Now insert the above malfunction. When this malfunction transient occurs:

- Record the following parameters as the malfunction event evolves:

	5 sec.	10 sec.	30 sec.	1 minute	5 minutes
Break flow					
Reactor pressure					
Steam flow from dome					
Feedwater flow					
ECC activation - mark √ in column					
Coolant temp					
Fuel temp					
Reactor water level					
Reactor power					

- At the onset of the reactor vessel bottom break, reactor water level drops, thus the steam volume in the dome increases. This in turn decreases the dome pressure. As a result, void fraction in core increases, leading to slight decrease in reactor power. That is why the yellow cursor on the screen moves downward.
- Recognizing that the reactor power is below the setpoint, the reactor power control system will withdraw the control rods in order to restore reactor power.
- At the same time, the drywell is pressurized very quickly by the LOCA break flow. In a short time, LOCA is detected, and reactor is scrammed by “high drywell pressure/LOCA detected” trip logic.
- When LOCA is detected, ECC is activated. FW pumps will also be tripped, when ECC is in service. At the same time, the main steam isolation valve will close, in order to isolate the containment.
- Due to the closing of the reactor isolation valve, the reactor pressure increases rapidly, resulting in “Reactor Press Hi” alarm. But due to the LOCA break, and the ECC core injection’s cooling effect, the reactor pressure quickly decreases and stabilizes, so the “Reactor Press Hi” alarm will disappear.
- As well, as there is no steam flow going to turbine, the turbine throttle pressure decreases rapidly, leading to turbine runback by the turbine control system. The result is turbine trip by low turbine forward power (alarm “Lo Turb Fwd pwr”)
- Go to BWR Plant Overview Screen. Re-initialize the simulator with the 100% IC.
- Repeat the malfunction event, and observe the evolution of all the trended variables.

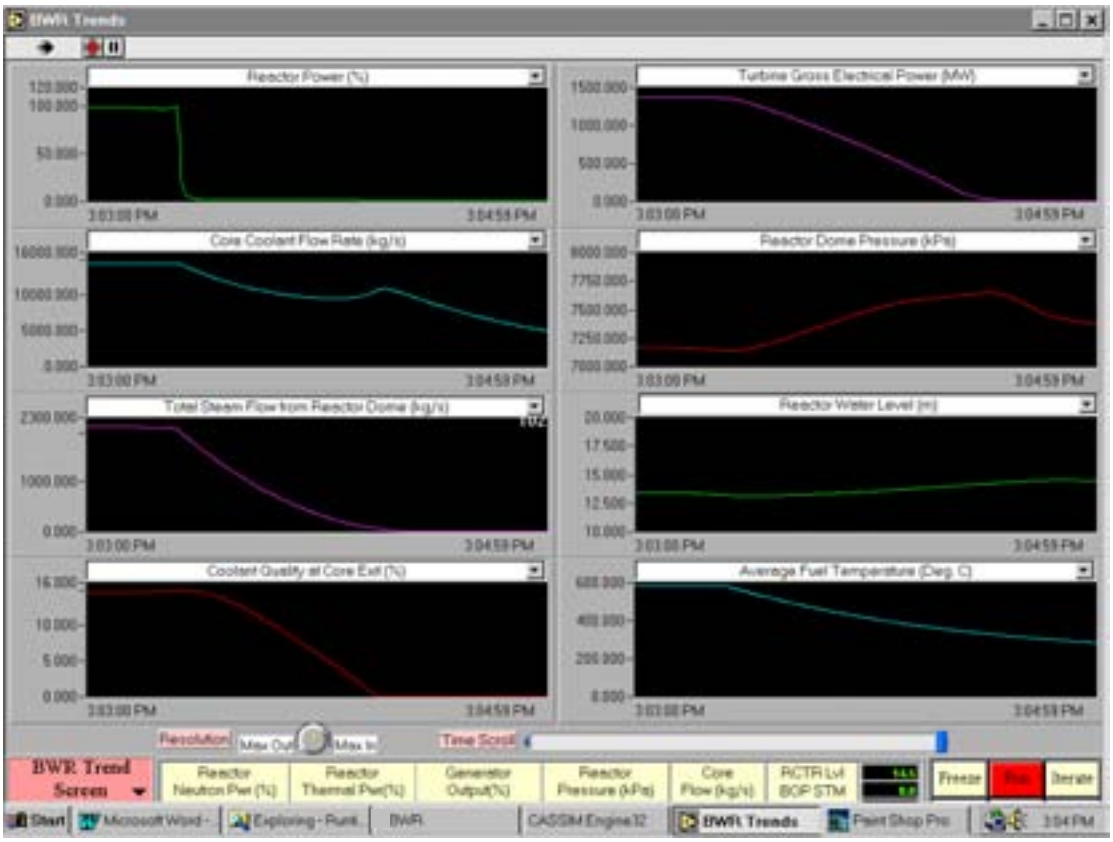

4.2.18 Load rejection

This malfunction causes sudden opening of the electrical switchyard breaker. This breaker connects the electrical power from the generator to the grid. The consequence is that the generator suddenly loses electrical load with this malfunction, causing trip on the generator, and subsequent trip on the turbine.

- Before initiating the malfunction, first go to the Power/Flow Map Screen.
- Load the 100% FP IC. Run the simulator.
- Insert the malfunction, and observe the movement of the yellow cursor.
- Turbine trip occurs very quickly, followed by reactor scram by "Turbine Power/Load Unbalance — Loss of Line" trip logic.
- This transient is very similar to turbine trip.

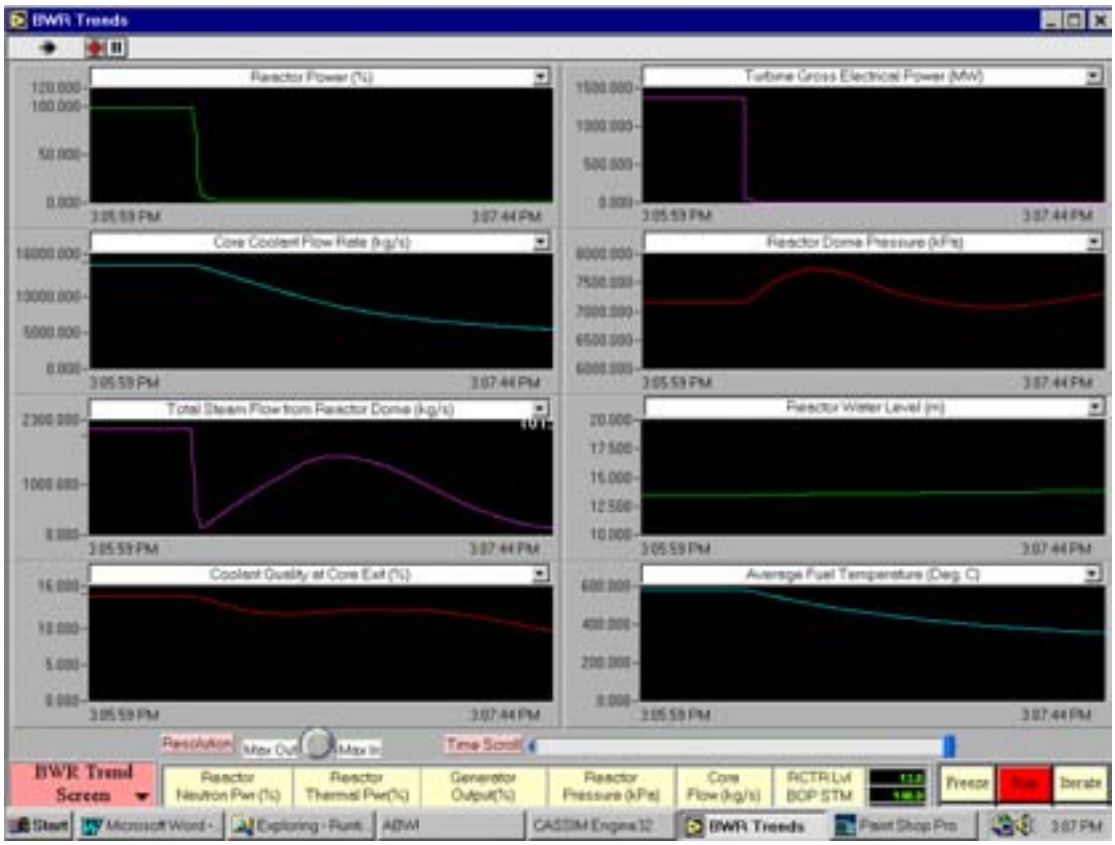

5. STEADY STATE MODEL

5.1 PURPOSE

The previous chapters describe the features of a BWR dynamic simulator. The simulator exercises and the malfunction responses in Chapter 3 are intended to provide students some insight and practice in BWR operational characteristics.

However, in order to have a deeper understanding of the BWR characteristics, it is necessary to understand the physical model behind this BWR simulator. The understanding of the physical model starts with an analysis of the steady state model, which is the focus of this chapter. What then follows is the understanding of the dynamic model, which is the focus of the next chapter.

The objective of the steady state model analysis is to understand the fundamental BWR operational question:

- In a BWR, why control rods are only used to raise reactor power up to 65% full power, and then further reactor power increase can be achieved by just increasing the core recirculation flow, without the movement of control rods?

5.2 BOILING WATER REACTOR MASS AND ENERGY BALANCE

A simplified BWR mass and energy flow diagram is shown in Figure 2.

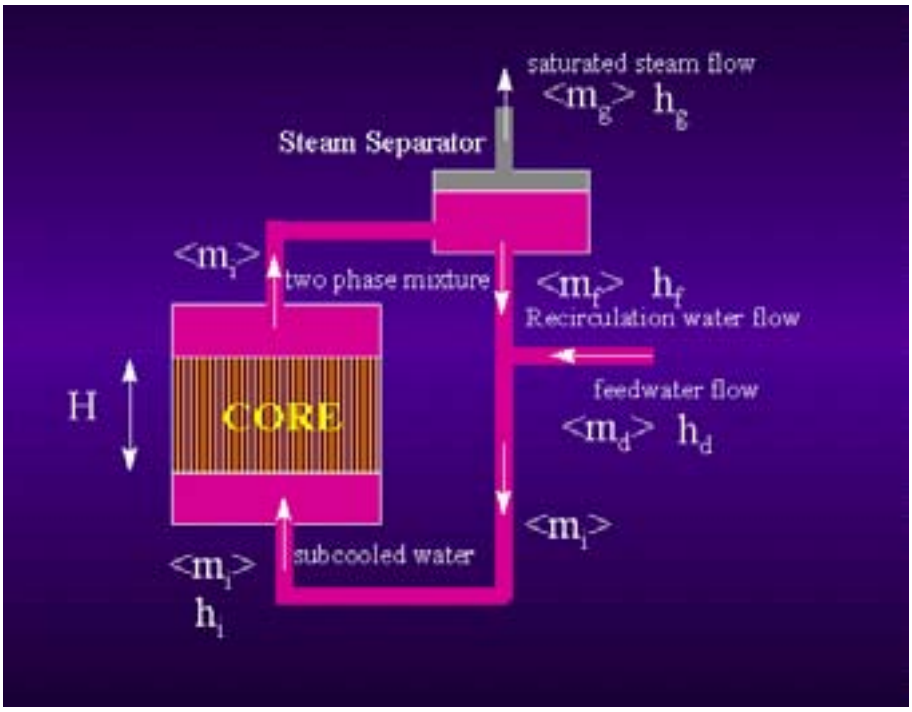

FIG. 2. Simplified BWR mass and energy flow diagram.

The following symbols are used to designate respective quantity variables:

- <m> = dm/dt = mass flow rate
- h = specific enthalpy
- H = core boiling height
- $< m_d >$ = feedwater flow rate ; h_d = feedwater enthalpy
- $< m_i >$ = coolant flow rate at core inlet; h_i = coolant enthalpy at core inlet
- $< m_g >$ = saturated steam flow rate; h_g = saturated steam enthalpy
- $< m_f >$ = recirculated liquid flow rate; h_f = recirculated liquid enthalpy

(1) **Overall mass balance in reactor core:**

The steady state overall mass balance in core is:

- Steam flow = feedwater flow

Hence $< m_g > = < m_d >$ ..... (5.2-1)

- Subcooled water flow at reactor core inlet = feedwater flow + recirculation liquid flow.

Hence $< m_i > = < m_d > + < m_f >$ ..... (5.2-2)

using equation (5.2-1),

$< m_i > = < m_f > + < m_g >$ ..... (5.2-3)

(2) **Core exit quality:**

By definition, the average core exit quality is defined as

$$X = \frac{< m_g >}{< m_g > + < M_f >} \quad \text{.....(5.2-4)}$$

Using equation (5.2-1) & (5.2-3),

$$X = \frac{< m_d >}{< m_d > + < M_f >} = \frac{< m_d >}{< m_i >} = \frac{< m_g >}{< m_i >} = \frac{Steam\ Flow\ Rate}{Core\ Flow\ Rate} \quad \text{.....(5.2-5)}$$

(3) **Recirculation ratio:**

By definition, the recirculation ratio R is defined as recirculation flow rate/steam flow rate:

$$R = \frac{< m_f >}{< m_g >} \quad \text{..... (5.2-6)}$$

Applying equation (5.2-5)

$$R = \frac{< m_f >}{< m_g >} = \frac{(1 - X)}{X} \quad \text{.....(5.2-7)}$$

(4) **Core flow rate:**

Using equation (5.2-3), and apply equation (5.2-7)

$$< m_i >=< m_f > + < m_g >=< m_f > + < m_f > * \frac{X}{(1-X)} = \frac{< m_f >}{(1-X)} \quad \text{……..(5.2-8)}$$

(5) **Energy balance at reactor core inlet:**

$$< m_i > * h_i =< m_f > * h_f + < m_d > * h_d \quad \text{……(5.2-9)}$$

Dividing both side by $< m_i >$,

$$h_i = \frac{< m_f >}{< m_i >} * h_f + \frac{< m_d >}{< m_i >} * h_d \quad ,$$

Applying equation (5.2-5) and (5.2-8),

$$h_i = (1-X) * h_f + X * h_d \quad \text{……..(5.2-10)}$$

or solving for X,

$$X = \frac{(h_f - h_i)}{(h_f - h_d)} \quad \text{…… (5.2-11)}$$

(6) **Energy balance at the core**:

Consider Q_t is the energy transferred from the core to the coolant,

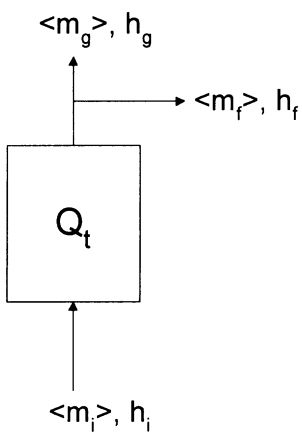

Applying energy balance at the core,

$$< m_g > .h_g + < m_f > .h_f = Q_t + < m_i > .h_i \quad \text{…….(5.2-12)}$$

Re-arranging,

$$Q_t =< m_g > .h_g + < m_f > .h_f - < m_i > .h_i \quad \text{…….(5.2-13)}$$

Or,

$$Q_t = < m_i > .\{\frac{< m_g >}{< m_i >}.h_g + \frac{< m_f >}{< m_i >}.h_f - h_i\} \ldots\ldots\ldots\ldots\ldots\ldots\ldots(5.2\text{-}14)$$

Applying equation (5.2-5) and (5.2-8),

$$Q_t = < m_i > .[X.h_g + (1-X).h_f - h_i] \ \ldots\ldots\ldots\ldots\ldots\ldots\ldots\ldots(5.2\text{-}16)$$

Starting from equation (5.2-12) again and applying (5.2-2),

$$Q_t = < m_g > .h_g + < m_f > .h_f - < m_f > .h_f - < m_d > .h_d$$

$$Q_t = < m_g > .(h_g - h_d) \ldots\ldots\ldots\ldots\ldots\ldots\ldots\ldots\ldots\ldots\ldots\ldots(5.2\text{-}17)$$

5.3 BOILING WATER REACTOR SPREADSHEET MODEL

Using the basic equations for BWR steady state mass and energy balance as derived above, it is intended in this section to build an EXCEL model for the BWR. In building this spreadsheet model, it is necessary to utilize the following Technical Data:

(1) BWR technical data sheet — in appendix

(2) Technical data for BWR power flow map — see below

(3) Technical data for available energy for condensing turbine — see below

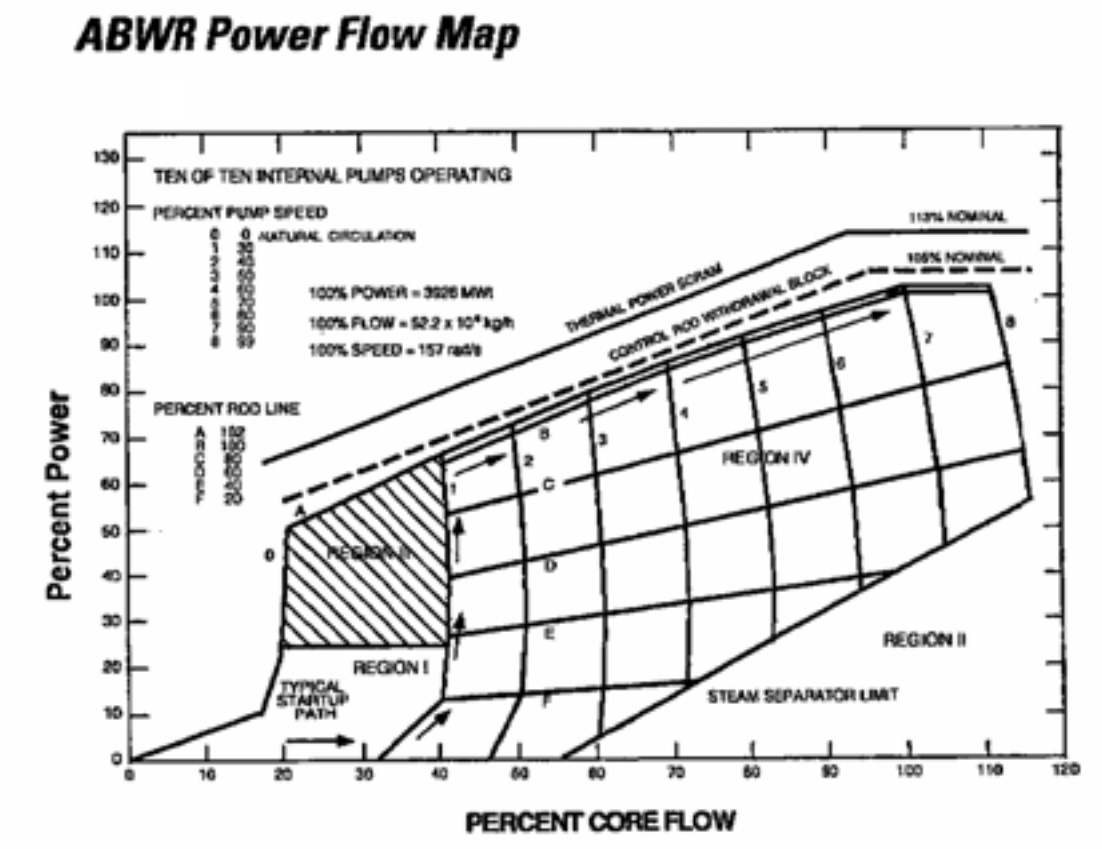

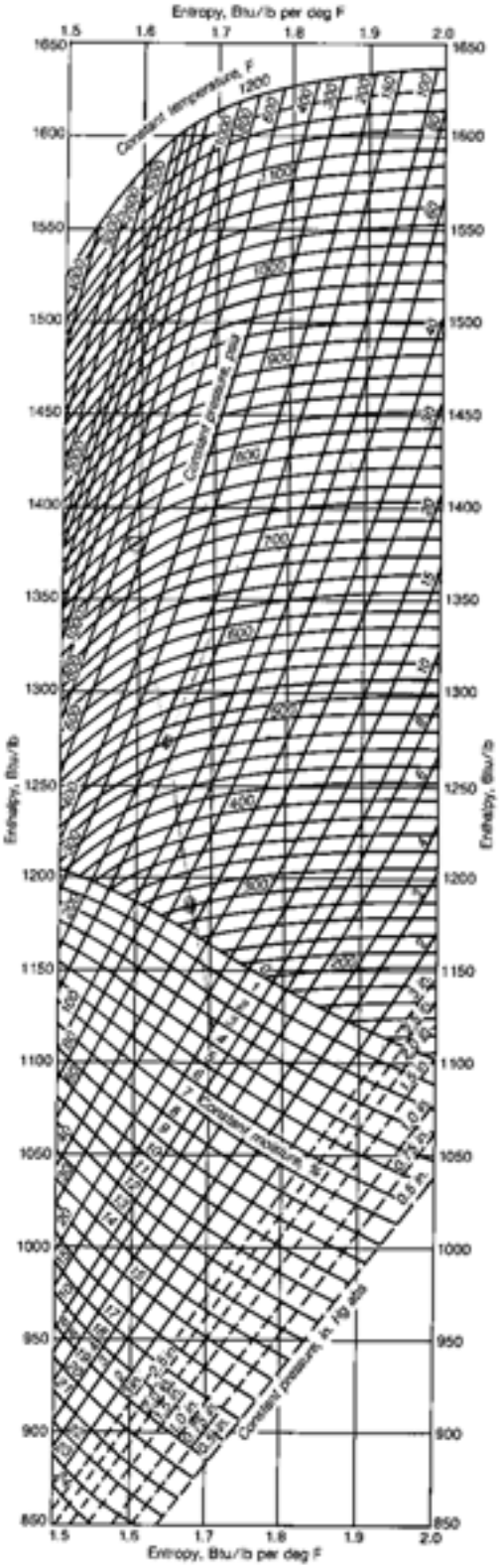

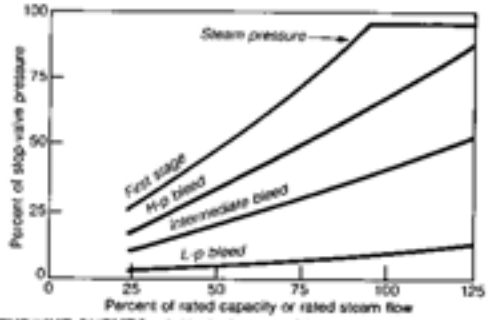

TURBINE CURVES, plotted when machine is new, are watched for deviations that indicate fouling, plugging, blade wear, etc

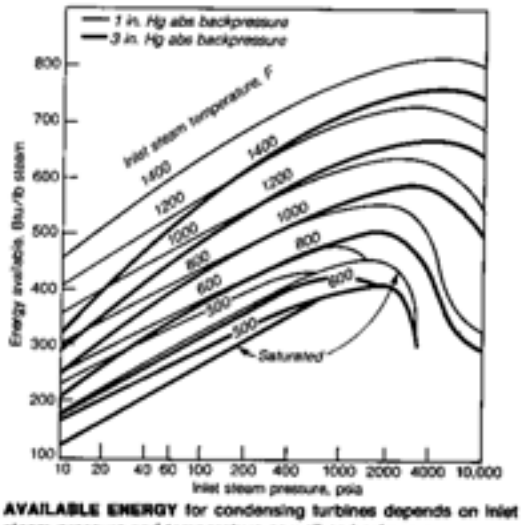

AVAILABLE ENERGY for condensing turbines depends on inlet steam pressure and temperature as well as backpressure.

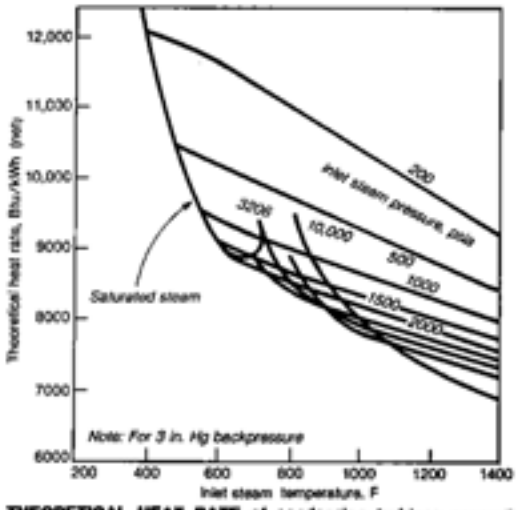

THEORETICAL HEAT RATE of condensing turbines generally improves with rising throttle-steam pressure and temperature

◂**MOLLIER CHART** is handy for estimating turbine performance. Section shown is the most-used area of the complete chart

5.3.1 Procedures for spreadsheet model

(1) Create an EXCEL spreadsheet called BWR.
(2) Column A's name is% FP, and put in% numbers in the column — 100%, 90%, 80%, 70%, 60%, 50%, 40%, 30%, 20%, 10%, 5%, 3%, 0%.
(3) Column B's name is MW — in the first cell, enter the value for MW (gross) at 100% FP. This number should be obtained from BWR data sheet (Appendix)[2].
(4) Compute the rest of the cells in Column B using% numbers in Column A.
(5) Column C's name is KBTU/hr. To convert MW in Column B to KBTU/hr in Column C, the conversion factor is 3413. Compute all the cells in Column C by using this conversion factor.
(6) Column D's name is steam flow (Kg/s). To compute steam flow Kg/sec at various% FP for the BWR plant, follow the steps below:
    (a) From the BWR data sheet (Appendix), get the turbine inlet pressure, the turbine backpressure (the same as condenser pressure), and the inlet steam temperature.[3]
    (b) Using the above turbine plant parameters (a), and from technical data curves for available energy for condensing turbine, obtain the available energy BTU per lb of steam for the turbine.[4]
    (c) Multiply this number by the efficiency of the turbine (assume 74%) to get the "actual" BTU/lb. [5]
    (d) Divide the C Column's numbers (KBTU/hr) by the "actual" BTU/lb to get Klb/hr.
    (e) Then multiply this number by 0.126 to convert Klb/hr to Kg/sec.
    (f) Verify the result by checking the BWR plant data sheet — the 100 FP steam flow is 2122 Kg/sec. It may be necessary to adjust turbine efficiency slightly in order to match with this number.
(7) Column E's name is core flow (Kg/s). From the BWR data sheet (Appendix), find the 100% FP Core Flow, and enter it into the first cell.[6]
(8) Column F's name is core flow in %. From the BWR Power/Flow Map and following the typical plant startup curve, obtain the % core flow corresponding to the respective% full power of the plant, and enter the number into the corresponding cell in Column F. For example,
    100% FP → 100% core flow;
    90% FP → 80% core flow
    70% FP → 65% core flow
    …… etc.
(9) After all the% numbers have been entered for all cells in Column F, compute the core flow (Kg/s) in all remaining cells in Column E.
(10) Column G's name is Quality X. Compute quality for all cells in Column G, using other columns' cell values. It is necessary to use equations in Section 4.2.
(11) Column H's name is Recirculation Flow (Kg/s) - calculate Recirculation Flow for all cells in Column H, using other columns' cells values.

---

[2] 100% FP MW is 1385 MW.
[3] Turbine Inlet Pressure is 6.8 MPa = 1000 PSIA; Condenser Pressure is 11.75 KPa = 3 inch Hg; Turbine Inlet Temperature is 284 deg. C = 543 deg. F.
[4] Available energy for condensing turbine is 380 BTU/lb.
[5] After taking into account the turbine efficiency, the "actual" available energy for condensing turbine is 281.1 BTU/lb.
[6] The 100% FP Core Flow is 14,502 Kg/sec.

(12) Plot a curve for the Quality X versus Power (%), and comment on the quality values as reactor power increases, with particular reference to "Void Feedback" on reactor reactivity".

(13) Try to answer the fundamental BWR operational question posted :

"In a BWR, why control rods are only used to raise reactor power up to 65% full power, and then further reactor power increase can be achieved by just increasing the core recirculation flow, without the movement of control rods? "

(14) In the steps below, it is intended to compute the reactor thermal power (MW(th)),and then compare the computed value versus that in the BWR data sheet, in order to verify the steady state model.

(a) Name Cell A23 as "Reactor Pressure MPa". From BWR data sheet (Appendix), find the reactor pressure, and enter the value into Cell B23.[7]

(b) Name Cell A24 as " Saturated Coolant Enthalpy h_f (KJ/Kg).

(c) In Cell B24, enter this equation to compute saturated coolant enthalpy (KJ/Kg) as a function of reactor pressure (MPa)

= 373.7665*POWER(B23, 0.4235532) + 415

(d) Name Cell A25 as "Saturated Vapor Enthalpy hg (KJ/Kg).

(e) In Cell B25, enter this equation to compute saturated vapor enthalpy (KJ/Kg) as a function of reactor pressure (MPa):

= - 0.9219176 * POWER ((B23 - 9), 2) - 16.38835 * (B23 - 9) + 2742.03

(f) Name Column I as "Reactor Thermal Power (MWt).

(g) Given the feedwater temperature provided in the BWR data sheet (Appendix), the feedwater enthalpy at that temperature is 932.077 KJ/Kg. Now using values in Cell B24 for h_f and Cell B25 for Hg, and other column's values, compute all the cell values for reactor thermal power in Column I.

(h) Verify the calculated 100% FP reactor thermal power versus the one provided in BWR data sheet (Appendix). [8]

[7] Reactor operating pressure is 7.17 MPa.

[8] The 100% FP reactor thermal power per BWR data sheet is 3926 MWt.

5.3.2 Steady state model solutions

% FP	MW	KBTU/hr	Steam flow	Core flow	Core flow %	Quality	Recir Flow	Thermal Power
			Kg/s	kg/s			Kg/s	MWth
100%	1385	4727005	2137.348164	14502	100	0.147382993	12364.65184	3926.001378
90%	1246.5	4254304.5	1923.613348	11601.6	80	0.165805867	9677.986652	3533.40124
80%	1108	3781604	1709.878531	9426.3	65	0.181394453	7716.421469	3140.801102
70%	969.5	3308903.5	1496.143715	7251	50	0.20633619	5754.856285	2748.200964
60%	831	2836203	1282.408898	6888	47.49689698	0.186180154	5605.591102	2355.600827
50%	692.5	2363502.5	1068.674082	6526	45.00068956	0.163756372	5457.325918	1963.000689
40%	554	1890802	854.9392656	6163	42.49758654	0.138721283	5308.060734	1570.400551
30%	415.5	1418101.5	641.2044492	5800	39.99448352	0.110552491	5158.795551	1177.800413
20%	277	945401	427.4696328	5365	36.99489726	0.079677471	4937.530367	785.2002756
10%	138.5	472700.5	213.7348164	5070	34.96069508	0.042156769	4856.265184	392.6001378
5%	69.25	236350.25	106.8674082	4855	33.47814095	0.022011825	4748.132592	196.3000689
3%	41.55	141810.15	64.12044492	4640.64	32	0.013817156	4576.519555	117.7800413
0%			0	2900.4	20	0	2900.4	0
Reactor Press	7.17							
Sat Cool Enth Hf	1275.911							
Sat Vap Enth Hg	2768.933							

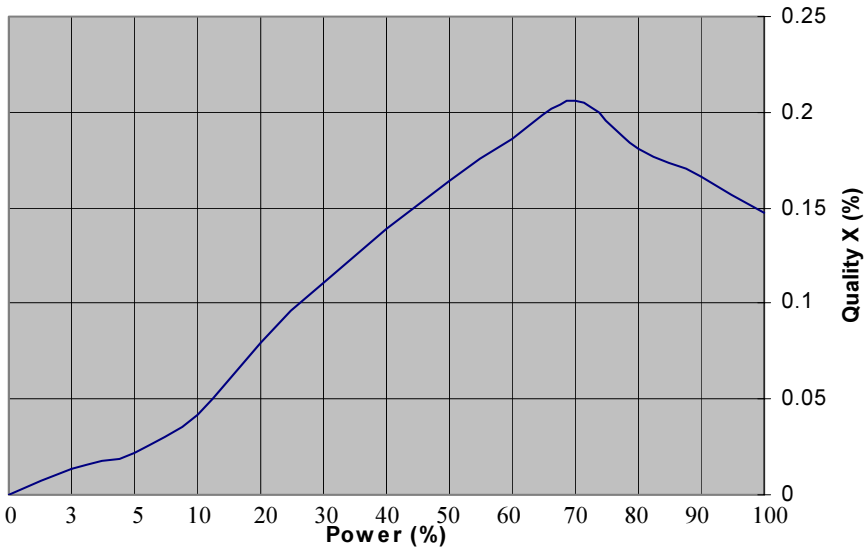

6. DYNAMIC MODEL DESCRIPTION

The dynamic model for BWR consists of a number of modules, which are interconnected simulation subsystem models for the BWR Plant. The modular structure of the dynamic model is best illustrated using a modeling diagram as shown below:

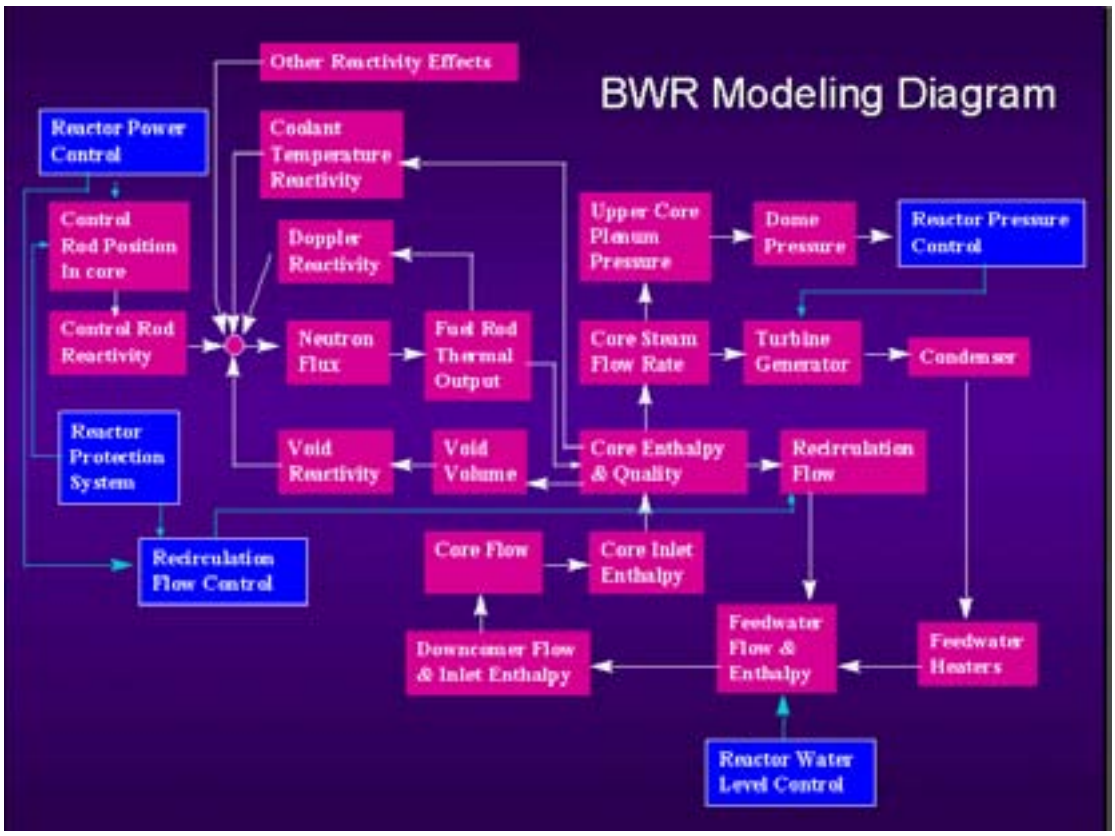

FIG. 3. Modeling diagram for BWR NPP, illustrating interconnected simulation subsystem models.

- The focal point of the model is the reactor block that simulates the reactor transient neutronics. It is represented as a "circle" in the diagram.
- The inputs to the reactor block are various reactivity inputs from various external blocks: (1) control rods reactivity (2) coolant temperature reactivity (3) Doppler reactivity (4) coolant void reactivity.
- The control rods reactivity block calculates the control rods reactivity worth based on the control rods positions in core; the coolant temperature reactivity block calculates the reactivity feedback based on coolant temperature in core; the Doppler reactivity block calculates the reactivity feedback based on fuel temperature; the coolant void reactivity block calculates the reactivity feedback based on average void fraction in core.
- The output of the reactor block is neutron flux. Based on the neutron flux as input, the fuel rod thermal output block computes the fuel cladding, fuel temperature and the heat transfer to coolant. The fuel temperature output in turn provides input to Doppler reactivity block.
- The heat transfer to coolant provides input to a core channel flow model that consists of a number of blocks to calculate coolant thermal-hydraulic behavior and void fraction.

The blocks included in the core channel flow model are: (1) core flow (2) core inlet enthalpy (3) core enthalpy and quality (4) core steam flow rate.

- The reactor vessel model consists of a number of blocks that calculate pressure, flow, and enthalpy at various points within the vessel. The blocks included in the reactor vessel model are: (1) upper core plenum pressure (2) dome pressure (3) recirculation flow (4) feedwater flow & enthalpy (5) downcomer flow and inlet enthalpy.
- The balance of plant (BOP) model consists of these blocks: (1) turbine generator (2) condenser (3) feedwater heaters.
- The control system model includes the following controller blocks: (1) reactor power control (2) reactor protection system (3) recirculation flow control (4) reactor water level control (5) reactor pressure control.

6.1 REACTOR MODEL

The reactor model utilizes a point kinetic model to simulate neutronic behavior:

1. The total delayed neutron fraction is the summation of the neutron fractions of the 6 neutron groups

$$\beta_1 = \sum_{i=1}^{6} \beta_i \qquad \text{.....(6.1-1)}$$

β_1 = total delayed neutron fraction

β_i = group i delayed neutron fraction (i=1,2,3,4,5,6);

2. The delayed neutron group's concentration can be expressed as:

$$\frac{dC_i}{dt} = \frac{\beta_i * N_{FLUX}}{T_{NEUTRON}} - \lambda_i C_i \quad i = 1,...6 \quad \text{.....(6.1-2)}$$

C_i = concentration of 6 delayed neutron groups,

λ_i = decay constant of delayed neutron groups.

β_i = group i delayed neutron fraction (i=1,2,3,4,5,6)

N_{FLUX} = total neutron flux in zone(norm)

$T_{NEUTRON}$ = mean neutron lifetime(sec)

3. The rate of change of neutron flux in a point kinetic model can be expressed as:

$$\frac{dN_{FLUX}}{dt} = \frac{(\Delta K - \beta_1) * N_{FLUX}}{T_{NEUTRON}} + \Sigma_{i=1}^{6} \lambda_i C_i \qquad \text{.....(6.1-3)}$$

N_{FLUX} = total neutron flux in zone(norm)

$T_{NEUTRON}$ = mean neutron lifetime(sec)

C_i = concentration of delayed neutron groups.

λ_i = decay constant of delayed neutron groups.

βi = group i delayed neutron fraction (i=1,2,3,4,5,6)

ΔK = overall neutron reactivity change (K)

The point kinetic reactor model calculates the neutron power based on 6 different neutron delay groups, and the overall change in reactivity.

4. N_{FLUX} can be calculated by solving above equations, using backward Euler's expansion.

$$N_{FLUX} = \frac{N_{FLUX}' + \Sigma_{i=1}^{6} A_i}{1 - \Delta t * (\frac{\Delta K - \beta i}{T_{NEUTRON}} + \Sigma_{i=1}^{6} B_i)}$$

where:

$$Ai = \frac{\lambda i * Ci * \Delta t}{1 + \lambda i * \Delta t}$$

$$Bi = \frac{\lambda i * \beta i * \Delta t}{(1 + \lambda i * \Delta t) * T_{NEUTRON}} \qquad \text{.....(6.1-4)}$$

N_{FLUX}' = total neutron zonal flux from previous iteration (norm)

5. The overall reactivity change is expressed as:

$$\Delta K = \Delta K_C + \Delta KM + \Delta KXE + \Delta KFUEL + \Delta VOID$$

.....(6.1-5)

ΔK = overall neutron reactivity change (K)

ΔK_C = neutron reactivity change due to control rods (K)

ΔKM = overall neutron reactivity change due to moderator temperature (K)

ΔK_{XE} = overall neutron reactivity change due to xenon build-up (K)

ΔK_{void} = overall neutron reactivity change due to void fraction in core (K)

ΔK_{FUEL} = overall neutron reactivity change due to fuel temperature (K)

The change in reactivity in the reactor is a function of control devices position in core (e.g. control rods), average concentration of xenon, average fuel temperature, average moderator temperature, and average void fraction in coolant.

7. The reactivity change due to xenon poisoning is assumed to be:

$\Delta KXE = 0.001*(27.93 - CXE)/14$ .....……(6.1-6)

ΔK_{XE} = overall neutron reactivity change due to xenon poisoning (K)

C_{XE} = xenon concentration

The formation of xenon is assumed to be from the decay of iodine as well as from the initial fission products. The concentration of xenon can be found using the following rate equations.

$$\frac{dC_I}{dt} = 9.445E-3 * N_{FLUX} - 2.8717E-5 * C_I$$

$$\frac{dC_{XE}}{dt} = 9.167E-4 * N_{FLUX} + 2.8717E-5 * C_I - (2.1E-5 + 3.5E-4 * N_{FLUX}) * C_{XE} \quad \text{.....(6.1-7)}$$

C_I = iodine concentration

C_{XE} = xenon concentration

N_{FLUX} = total neutron flux in zone (norm)

6.2 FUEL HEAT TRANSFER

A lumped parameter technique is used for calculating the heat transfer from UO_2 fuel rods:

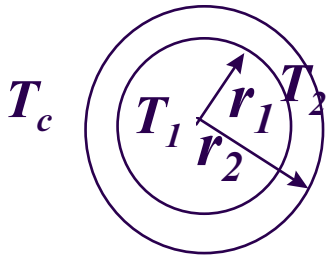

Cross-section of a fuel pellet, enclosed by metal fuel clad. Reactor coolant gets heat transfer from fuel clad.

For fuel elements in a reactor, the transient fuel meat temperature and fuel clad temperature are given by:

$$C_1 \frac{dT_1}{dt} = \dot{Q}_n - \frac{T_1 - T_2}{R_1} \quad \text{.....(6.2-1)}$$

$$C_2 \frac{dT_2}{dt} = \frac{T_1 - T_2}{R_1} - \frac{T_2 - T_c}{R_2} \quad \text{.....(6.2-2)}$$

Where

$\dot{Q}_n$ = nuclear heating of fuel rod

C_1 = thermal capacity for fuel pellet = $\pi\ r_1^2 c_{p1}\rho_1$

C_2 = thermal capacity for fuel clad = $2\pi\ r_2(\Delta r)\ c_{p2}\rho_2$

R_1 = resistance of UO_2 and gap = $\frac{1}{4\pi\ k_1} + \frac{1}{2\pi\ r_1 h_g}$

k_1 is UO_2 thermal conductivity;

h_g is gap conductance

T_1 = average fuel pellet temperature

T_2 = average fuel clad temperature

T_c = average coolant temperature

R_2 = the resistance between the clad and coolant = $1/(2\pi r_2 h)$,

where h is the conductance between clad and coolant and r_2 is the outside radius of the fuel pellet including the clad.

6.3 DECAY HEAT MODEL

The buildup and decay of fission products in an operating BWR lead to a decay power source in the core even after the chain reaction has been stopped, and the delayed neutrons have disappeared, as would be the case after a reactor scram. There is a large number of fission product isotopes which contribute to this decay heat source, and it is difficult to model individual decay sources. However from measured data, empirical formulas can be constructed to fit the decay source following a reactor scram to a sum of contributions from the various sources as shown below.

The decay heat calculation for the reactor assumes that 3 separate decay product groups exist, each with a different decay time constant.

$$P = N_{FLUX} - \sum_{i=1}^{3}(\gamma_i * N_{FLUX} - D_i) \quad \text{.....(6.3-1)}$$

$$\frac{dD_i}{dt} = \lambda_i * (\gamma_i * N_{FLUX} - D_i) \quad \text{.....(6.3-1)}$$

Where

P = thermal power released from fuel (normalized)

N_{FLUX} = neutron flux (normalized)

D_i = fission product concentration for decay group i

γ_i = fission product fraction for decay group i

λ_i = decay time constant for decay group i

The decay heat calculation is used, as input - reactor power P, by the "Fuel Heat Transfer to Coolant" module to calculate respective coolant temperature and fuel temperature in the core.

6.4 COOLANT HEAT TRANSFER

The BWR core is composed of parallel channels that enclose the fuel elements. These channels are connected by the lower plenum at the bottom of the core inlet, and by the upper plenum at the core exit. The flow enters the channel at the bottom through an inlet orifice. Additional flow enters the bypass region of the core through fuel casting holes.

Under steady state (normal operating) conditions, the core inlet flow is subcooled. As the flow in the channel passes the fuel, it is heated until boiling occurs in the channel. Thus the channel flow can be considered as three separate regions:

- Subcooled non-boiling
- Nucleate boiling in subcooled liquid and
- Nucleate boiling in unsaturated liquid

With further heating, in transient conditions, bulk and film boiling occur. The heat transfer characteristics for steady state and transient conditions have been well researched and documented as shown in the following diagram:

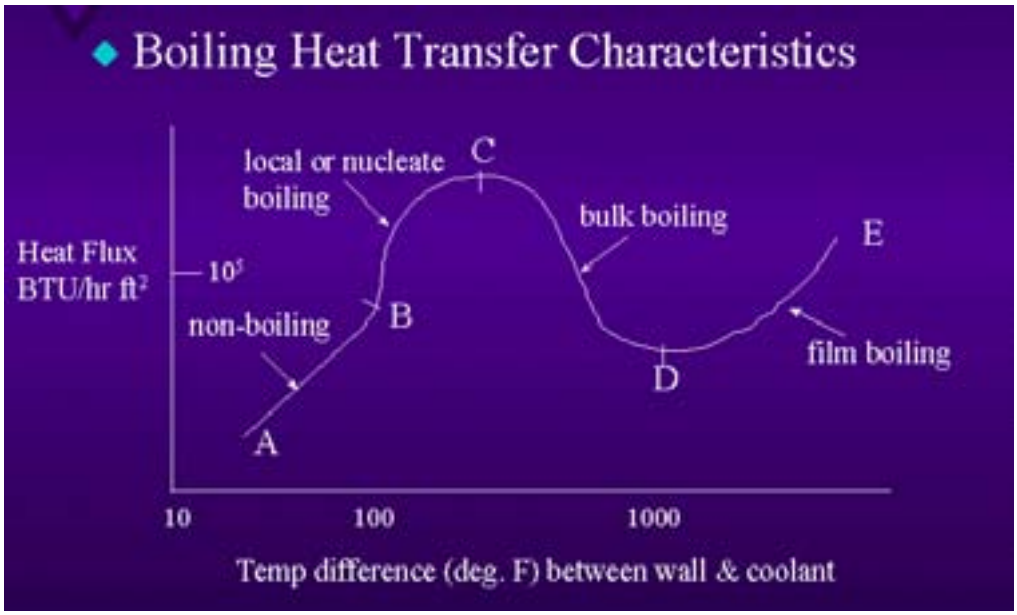

FIG. 4. Boiling heat transfer characteristics.

- A-B: non-boiling heat transfer by single-phase liquid convection.
- B-C: local or nucleate boiling. The heated surface temperature exceeds saturated temperature by a few degrees; bubbles are formed; there is large increase in heat flux due to evaporation of water and mixing of liquid by bubbles.
- C: dry out: water film at fuel rod surface disappears
- C-D: bulk boiling. The heated surface is blanketed by unstable, irregular film in violent motion. Heat is transferred by conduction and radiation only, hence heat flux decreases substantially.
- D-E: film boiling. At D, film becomes stable, and heat transfer improves, as the surface gets hotter. However, very high temperature is reached with high heat flux in this region, usually resulting in the destruction of the fuel and sheath. Dryout occurs in region E.

For the BWR, the core for the most part operates in B-C nucleate boiling region, away from C. For calculating the heat transfer coefficient to be used in the heat transfer model, Thom's nucleate boiling heat transfer at pressures from 750 to 2000 psia is used:

$$(T_w - T_{sat}) = 0.7123 \frac{\sqrt{q''}}{e^{(\frac{P}{8690})}} \qquad \text{.....(6.4-1)}$$

where

T_w = fuel wall temperature (deg. C)

T_{sat} = saturated coolant temperature (deg. C)

q" = heat flux (MW/m^2)

P = pressure (Kpa)

The average fuel energy equation is given by:

$$\rho_f V_f C_f \frac{dT_f}{dt} = P - UA\,(T_f - T_c) \qquad \text{.....(6.4-2)}$$

where

ρ_f = volume average fuel density

V_f = fuel volume in one zone

C_f = average fuel specific heat capacity

T_f = average fuel temperature

T_c = average coolant temperature

P = reactor power

U = overall heat transfer coefficient (Thom's nucleate boiling)

A = overall heat transfer area for fuel channel

The average core coolant energy equation is given by:

$$\rho_c V_c \frac{dh_o}{dt} = W_i h_i - W_o h_o + X.h_{fg} + UA(T_f - T_c) \quad \ldots\ldots\ldots\ldots\ldots(6.4\text{-}3)$$

where

ρ_c = volume average coolant density

V_c = coolant volume in one zone

h_i = average coolant specific enthalpy at inlet of the core

h_o = average coolant specific enthalpy at outlet of the core

A = overall heat transfer area for fuel channel

U = overall heat transfer coefficient. In the non-boiling region, the Dittus-Boetler correlation for forced convection is used, which is proportional to the (coolant flow)$^{0.8}$. In the boiling region, the heat transfer coefficient correlation is derived from Thom's nucleate boiling (equation 6.4-1)."

T_f = average fuel temperature

T_c = average coolant temperature

W_i = coolant mass flow rate at fuel channel inlet

W_o = coolant mass flow rate at fuel channel outlet

X = quality of coolant

h_{fg} = latent heat of vaporization = hg – hf

6.5 CORE HYDRAULICS AND HEAT TRANSFER

The core hydraulics for the BWR involves the solution of the mass, energy and momentum equations. Since these equations are coupled in a relatively weak fashion, it is possible to de-couple the mass and momentum equations from the energy equation as far as simultaneous solution is concerned. This allows a much simpler solution of simultaneous equations in the core. Therefore for this purpose, the core is divided into flow regions or nodes axially, and pressures and flows are calculated along the reactor coolant flow regions through the core as shown in the following flow network diagram. Calculation of energy transfer is handled separately and is described in the next section.

As the core has a non-boiling region, and a boiling region, appropriate hydraulic flow equations should be used for these regions. For the non-boiling region, incompressible flow equations will be used. For the boiling region, two-phase compressible flow equations will be used. The details are provided below.

6.5.1 Incompressible flow for non-boiling region

In the core's subcooled non-boiling region, the numerical solution technique used for solving the network pressures and flows employs the hydraulic equations for incompressible flow.

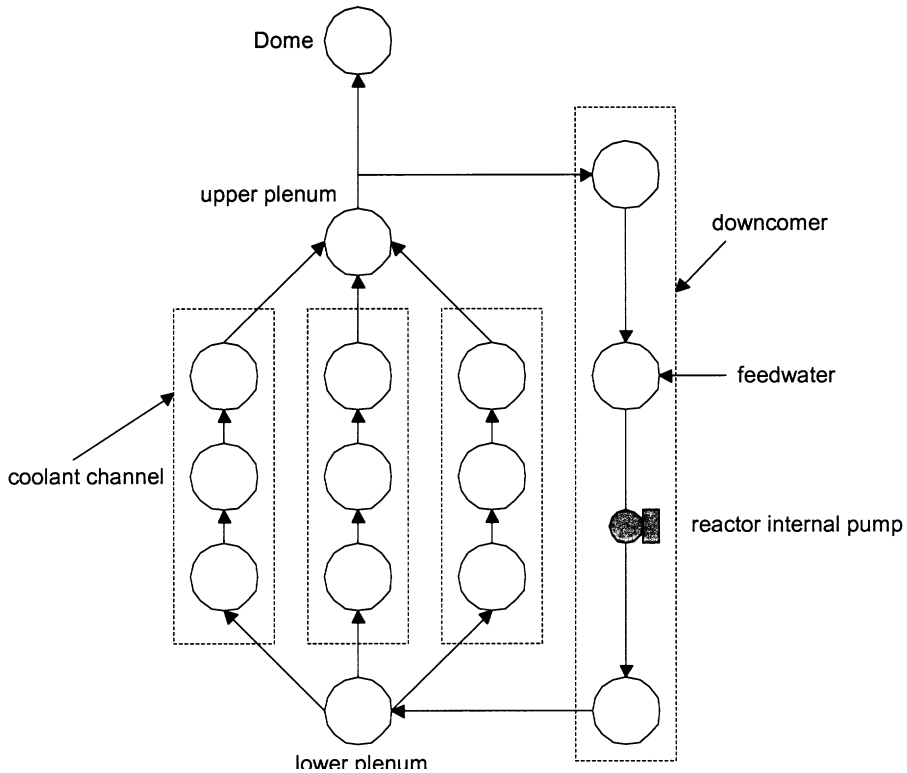

FIG. 5. Flow network diagram for core hydraulics.

For example, in the above flow network, the "circles" are pressure nodes, where pressures are calculated based on the coolant mass balance at the nodes. For example, the pressure at Node 1 is given by:

$$C_{N_1} \frac{dP_{N_1}}{dt} = W_{IN} - W_{OUT} \quad \text{.....(6.5-1)}$$

Where

C_{N1} = Node 1 Capacitance
P_{N1} = Node 1 Pressure
W_{IN} = total flows into the node 1
W_{OUT} = total flows out of the node 1

Similarly for all other nodes in this region.

The "arrow" paths joining adjacent nodes are called "links", where flows are calculated based on the square root of pressure difference between adjacent nodes, known as the momentum equation for incompressible flow. For example, the flow between node 1 and node 2 is given by:

$$W_{N_1N_2} = K_{N_1N_2} \sqrt{P_{N_1} + P_{DYH} - P_{N_2}} \quad \text{.....(6.5-2)}$$

Where

W_{N1N2} = flow from node 1 to node 2

K_{N1N2} = flow conductance, which includes effects of valve Cv (if applicable), and effects of fluid density changes.

$= KC_V \sqrt{Fluid\ \ Density}$

P_{N1} = Node 1 pressure

P_{N2} = Node 2 pressure

P_{DYH} = Pump dynamic head, if applicable

Similarly for all other links in this region.

By specifying the "nodes" and connecting them by "links" as in the above diagram, a nodal representation of the core hydraulic flow network problem can be defined. Then a matrix numerical method is employed to solve the system of node's pressure equations (as in 6.5-1) and link's momentum equations (as in 6.5-2) to obtain the pressures and flows. If the coolant heat transfer in the flow network results in fluid density changes, these changes will be taken into consideration by the link's conductance calculations (see above K_{N1N2} term).

6.5.2 Compressible flow for boiling region

In the core's boiling region, the following momentum equations are used:
For non-choked flow:

$$Flow = K_c.V_1.(P_{up}^2 - P_{down}^2)^{0.5} \quad .....(6.5\text{-}3)$$

For choked flow:

$$Flow = K_c.V_1.P_{up} \quad ..... (6.5\text{-}4)$$

Where K_c = link conductance

V_1 = valve port area in the link between the upstream and downstream nodes.

P_{up} = up stream pressure

P_{down} = downstream pressure

As noted in equation (6.5-3), the compressible flow equation is non-linear, thus making the analytical numerical solution complex and difficult to solve. Therefore, an approximation method technique is employed. It is called the "*variable conductance*" technique, in which the same set of *incompressible* flow equations (6.5-1, 6.5-2) could be used for a compressible flow system.

In this technique, when the flows are calculated using the incompressible flow equations (6.5-1, 6.5-2), they have to be substituted back to the compressible momentum equations (6.5-3, 6.5-4), using initial pressure conditions, to back calculate the link conductance K_c, hence the name "variable conductance".

Then in the next simulation iteration, because of the changes in link conductance obtained by the back-calculation, new values for flow will result from another iteration of the incompressible flow equations. Again the new flow values will give rise to new "link

conductance" from back-calculation using the compressible flow equations. So after a few iterations in this manner, the flow obtained from incompressible flow equations, with the calculation of variable conductance in each iteration, will converge to the flow supposed to be computed from the compressible flow equations.

In other words, this technique "allows" the link momentum equation for "compressible" type flow systems to be approximated by the "incompressible" flow system momentum equation. But instead of a fixed conductance, it is calculated in each iteration from the compressible momentum equation using back-substitution. The application of this technique allows the same numerical algorithm formulated for "incompressible" flow systems (Network Solver) to be adapted for use by "compressible" flow systems, simply with the additional computation of "variable link conductance".

6.5.3 Boiling boundary

As the reactor core conditions (e.g. pressure) change, the core boiling boundary will change.

Applying the following notations:

- H_o = non-boiling height;
- H_B = boiling height;
- H = total active height of core

The height ratio Ho/H is related to the ratio of sensible heat, q_s added per unit mass of incoming coolant (KJ/Kg) to the total heat q_t added in the channel per unit mass of coolant channel (KJ/Kg), assuming uniform heat addition:

$$\frac{q_s}{q_t} = \frac{H_o}{H} \quad \text{…….. (6.5-5)}$$

The ratio q_s/q_t can be computed using enthalpies

$$\frac{q_s}{q_t} = \frac{h_f - h_i}{(h_f + X.h_{fg}) - h_i} \quad \text{…….(6.5-6)}$$

Where

h_f = saturated coolant enthalpy, KJ/Kg

h_i = coolant enthalpy at inlet of channel KJ/Kg

$h_{fg} = h_g - h_f$ = latent heat of vaporization KJ/Kg

Thus using equation (6.5-5) to (6.5-6), the non-boiling height Ho and the boiling height H_B = H - Ho can be calculated in terms of the respective enthalpies.

6.5.4 Summary of multi-nodal approach for simulating core hydraulics and heat transfer

The above-described approach in calculating the core hydraulics and heat transfer is to divide the coolant channels into a number of "control volumes" known as "nodes" connected by "links". Mass and momentum conservation equations are solved on a nodal basis, while the energy conservation equation is solved for each link. Incompressible and compressible

hydraulic network solution techniques are used to simulate single phase and homogeneous two-phase flows. The calculation procedures are as follows:

- Each lumped channel is divided vertically into a number of zones, called nodes — for simplicity, assume lower, middle and upper zones. The nodalization can be as granular as the model requires.
- Each coolant channel zone is assumed to have its own coolant flow, its own lumped fuel element.
- The fuel heat transfer to coolant calculations (equation 6.2-1, 6.2-2; equations 6.4-1, 6.4-2, 6.4-3) start with the lower zones, with zones inlet temperatures derived from the core lower plenum temperatures; and with coolant flows derived from the hydraulic flow network computation at the lower plenum (equations 6.2-8, 6.2-9).
- After obtaining the lower zone coolant outlet temperatures and average fuel temperatures, the calculations proceed to the middle zones. It should be noted that a program check is performed in each zone to determine if the coolant outlet enthalpy exceeds saturated coolant enthalpy. If so, there is quality in the channel, and "*variable link conductance*" approach (see above) is used to approximate compressible flow and pressure in the zone. (equation 6.2-10, 6.2-11).
- The core hydraulics and heat transfer for middle zones are computed in the same manner using parameters obtained from the lower zones, and then the calculations proceed to the upper zones.
- At the core exit upper plenum, the coolant temperatures from all the lumped channels are mixed together by the flow turbulence to determine the average mixing temperature at the upper plenum.

6.6 SATURATED ENTHALPY, SATURATED LIQUID DENSITY

Using the steam table correlation within the operating range for pressure, the following enthalpies can be obtained as a function of pressure P:

- The saturated liquid enthalpy :

  $h_f = f(P)$ ……..……(6.6-1)

- The saturated steam enthalpy :

  $h_g = f(P)$ ……..…(6.6-2)

- The latent heat of vaporization:

  $h_{fg} = h_g - h_f$ ……..…(6.6-3)

- The saturated liquid density:

  $\rho_{sat} = f(P)$ ……..…(6.6-4)

6.7 CORE EXIT ENTHALPY, CORE QUALITY, VOID FRACTION

- The core exit enthalpy:

$$h_{core} = h_{dc} + \frac{Q_t}{W_{dc}} \quad \text{……..(6.7-1)}$$

where

W_{dc} = coolant flow at downcomer

h_{dc} = enthalpy of liquid at downcomer

Qt = heat transfer from core and the equation is:

$$Q_t = W_{dc}.(h_f + X.h_{fg} - h_{dc}) \quad \text{…….(6.7-2)}$$

- The core exit quality:

$$X = \frac{h_{core} - h_f}{h_{fg}} \quad \text{……..…..(6.7-3)}$$

- The void fraction :

$$\alpha = \frac{1}{1 + (\frac{1-X}{X}).\psi} \quad \text{……(6.7-4)}$$

where

X = quality

$\psi = (\rho_g / \rho_f)$. S ; S = Slip Ratio ……(6.7-5)

ρ_g = saturated steam density

ρ_f = saturated liquid density

6.8 DOME MASS BALANCE AND ENERGY BALANCE

Mass balance at dome:

$$\frac{dV_d}{dt} = \frac{1}{\rho_f}\{(1-X).W_r - W_{dc} + W_{fw}\} \quad \text{…….(6.8-1)}$$

Where

V_d = fluid volume in dome

ρ_f = saturated fluid density

X = fluid quality

W_r = core flow

W_{dc} = downcomer flow

W_{fw} = feedwater flow

Energy Balance at Dome:

$$\frac{dh_d}{dt} = \frac{1}{\rho_f.V_d}\{(1-X).W_r.(h_f - h_d) + W_{fw}.(h_{fw} - h_d)\} \quad \text{…….(6.8-2)}$$

Where

h_d = enthalpy of 2 phase fluid in dome after mixing with feedwater
h_f = saturated fluid enthalpy
h_{fw} = feedwater enthalpy
V_d = fluid volume in dome
ρ_f = saturated fluid density
X = fluid quality
W_r = core flow
W_{fw} = feedwater flow

6.9 SATURATED STEAM DENSITY AND DOME PRESSURE

The saturated steam density:

$$\frac{d\rho_g}{dt} = \frac{X.W_r - W_g + \rho_g.\frac{dV_d}{dt}}{V_D - V_d + V_{SM} + V_r.\alpha} \quad \text{……(6.9-1)}$$

Where

V_d = fluid volume in dome

ρ_g = saturated steam density

X = fluid quality

W_r = core flow

V_D = volume of dome

V_{SM} = volume of steam main

V_r = liquid volume of core

α = void fraction

Dome pressure is computed from the saturated steam density,

$$P_D = f(\rho_g) \quad \text{…….(6.9-2)}$$

6.10 DRIVING PRESSURE IN BOILING CORE

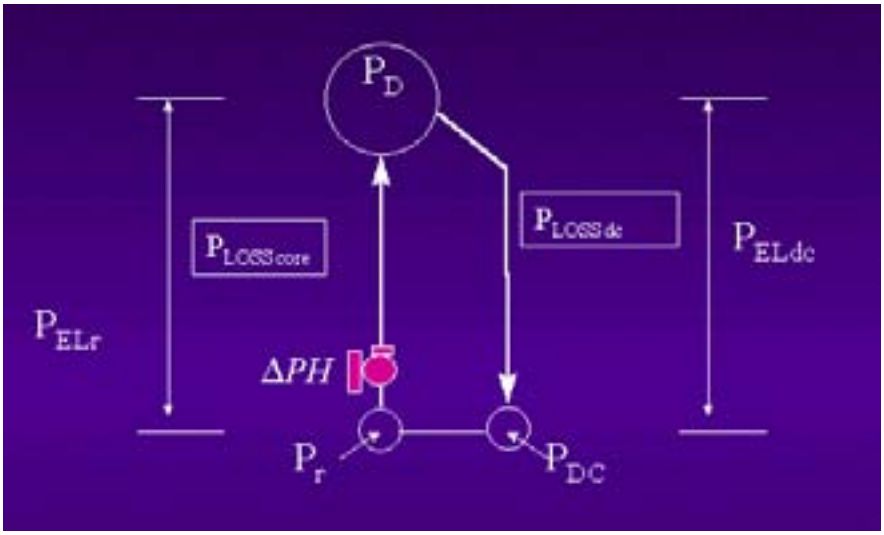

FIG. 6. Driving pressure in boiling core.

- Referring to the above diagram, the pressure at the downcomer (before pump suction) is given by:

$$P_{DC} = P_D + P_{ELdc} - P_{LOSSdc} \quad \text{.....(6.10-1)}$$

where P_D = pressure of dome

P_{ELdc} = static pressure due to elevation of dome above downcomer

P_{LOSSdc} = pressure losses due to fluid flow from dome to downcomer

- The pressure at the dome is given by

$$P_D = P_{DC} - P_{LOSScore} - P_{ELr} + \Delta PH \quad \text{.....(6.10-2)}$$

where P_{DC} = pressure at downcomer (before pump suction)

$P_{LOSScore}$ = pressure loss due to core flow from lower plenum to dome

P_{ELr} = static pressure due to dome above lower plenum

Δ PH = recirculation pump head

or re-arranging (6.10-2),

$$P_{DC} = P_D + P_{LOSScore} + P_{ELr} - \Delta PH \quad \text{..... (6.10-3)}$$

- Equating (6.10-1) and (6.10-3),

$$P_{LOSSdc} + P_{LOSScore} = (P_{ELdc} - P_{ELr}) + \Delta PH \quad \text{..... (6.10-4)}$$

- Note that the elevation pressure difference between the two flow paths:

(a) from the downcomer to the dome, through the core, and
(b) from the dome to downcomer, after mixing with feedwater

are directly related to the mean fluid density differences between the downcomer and the core as given below:

$$(P_{ELdc} - P_{ELr}) = g.\ Z_{EL}.\ (\rho_{dc} - \rho_r) \quad \text{..... (6.10-5)}$$

Where $g = 0.00981$ KPa/(Kg/m^2), conversion constant from Kg/m2 to KPa

Z_{EL} = elevation height of the dome from the bottom of the reactor pressure vessel (m)

ρ_{dc} = mean fluid density at downcomer

ρ_r = mean fluid density at core.

- It can be observed from (6.10-4) that:

  If the fluid density in the downcomer column is heavier than the fluid density in the core fluid column, such that the pressure difference in these two fluid columns "overcomes" the total pressure losses in these two columns, then natural circulation can be sustained without a recirculation pump. Otherwise forced circulation with recirculation pump is required.

6.11 RECIRCULATION FLOW & PRESSURE LOSSES

Applying Navier Stokes equations of motion for an incompressible flow at downcomer.

$$\frac{dW_{dc}}{dt} = \frac{g_c.A_{dc}}{g.Z_{EL}}(\Delta PH + \Delta P_{EL} - P_{LOSSdc} - P_{LOSScore}) \text{ ..... (6.11-1)}$$

Where

W_{dc} = recirulation flow

g_c = gravitational constant, 9.81 m/s^2

A_{dc} = cross-sectional area of the downcomer area (m^2)

g = 0.00981, conversion factor, Kg/m^2 to KPa

Z_{EL} = elevation height of dome from bottom of reactor vessel (m)

The pressure loss calculation is important for reactor design. It involves the following calculations:

- sum of frictional pressure losses in core and downcomer, all computed in the direction of flow.
- sum of acceleration pressure losses.
- sum of all pressure losses due to flow area contractions and expansions.
- sum of single phase and two phase pressure losses.

The topic of pressure loss calculation is commonly found in nuclear engineering text books (e.g. Nuclear Heat Transport - El. Wakil, ISBN 0-7002-2309-6), therefore details are not provided here.

6.12 COOLANT RECIRCULATION PUMPS

The main driving force behind the flow of coolant in the primary loops of a BWR is the coolant recirculation pump. The basic formulation for the pump model is as follows:

The torque balance (angular momentum) equation for the shaft and rotating assembly is:

$$\frac{2\pi}{60} I \frac{d\Omega}{dt} = T_M - T_h - T_f \quad \text{……..(6.12-1)}$$

where I = pump moment of inertia
Ω = pump speed (RPM)
TM = motor torque
T_h = hydraulic torque
T_f = friction torque

The head and torque characteristics of a pump as a function of flow rate and rotor speed, are determined using the homologous theory as given by Stepanof [9]. In this theory, the pump parameters are represented by their normalized values. The shape of the homologous curves depend only on the rated speed of the pump. The homologous modeling relates normalized head, h, and normalized hydraulic torque, β, to normalized flow, ν, and speed, α, by tabulating:

$$\frac{h}{\nu^2}, \frac{\beta}{\nu^2} \quad vs \quad \frac{\alpha}{\nu} \quad for \quad 0 < \left|\frac{\alpha}{\nu}\right| < 1$$

$$\frac{h}{\alpha^2}, \frac{\beta}{\alpha^2} \quad vs \quad \frac{\nu}{\alpha} \quad for \quad 0 < \left|\frac{\nu}{\alpha}\right| < 1$$

These curves are fitted with a high order polynomial function of (α/ν), and (ν/α) respectively, and are used by the model to compute pump head and torque. The pump head so determined is used as an input to the primary hydraulic model (Chapter 6.5). The pump torque is used as input to the torque balance equation (Equation 6.12-1).

6.13 FEEDWATER FLOW

The feedwater flow is determined from the control valve position, and the pressure difference between the upper plenum of the reactor pressure vessel and the feedwater/condensate system:

$$\frac{dw_{fw}}{dt} = (P_c + \Delta P_{fw} + \Delta P_c - P_D) - \rho_c \Delta Z_c - \rho_{fw} \Delta Z_{fw} - \rho_c \Delta Z_{cc} - (K_c + K_{fw} + K_{fwv}) W_{fw}^2$$

…….(6.13-1)

Where

P_c = condenser pressure

[9] Stepanoff, A.J., Centrifugal and Axial Flow Pumps: Theory, Design and Application, Wiley, NY, 1957.

ΔP_{fw} = feedwater pump head

ΔP_c = condensate pump head

P_D = Reactor upper plenum pressure

K_c = loss coefficients of condensate flow

K_{fw} = loss coefficients of feedwater flow

K_{fwv} = loss coefficients of feedwater control valves

ρ_c = density of condensate

ρ_{fw} = density of feedwater

ΔZ_c = elevation head of feedwater heater above condensate heater

ΔZ_{fw} = elevation head of steam generator above feedwater heaters

ΔZ_{cc} = elevation head of condenser

The feedwater enthalpy is obtained from the time lag between the feedwater heater and steam generator

$$\frac{dh_{fw}}{dt} = \frac{h_{fwh} - h_{fw}}{\tau} \qquad \text{.....(6.13-2)}$$

Where

h_{fw} = feedwater enthalpy at steam generator

h_{fwh} = feedwater enthalpy at feedwater heater, which is obtained from the heat balance between extraction steam from turbine for feedwater heating, and the feedwater.

6.14 MAIN STEAM SYSTEM

The main steam system model includes the main steam piping from the steam drum of the steam generator, the main steam isolation valve (MSV), the turbine stop valves, the turbine control valves and the condenser steam dump valves.

The thermodynamic state of the main steam system is governed by conservation of energy and mass,

$$\frac{dM_h}{dt} = W_{DOME} - (W_T + W_D + W_B) \qquad \text{.....(6.14-1)}$$

$$\frac{dU_h}{dt} = W_{DOME}.h_{DOME} - (W_T + W_D + W_B).h_h \qquad \text{.....(6.14-2)}$$

Where

M_h = total steam vapor mass in the system

W_{DOME} = steam flows from reactor steam dome to steam header

W_T = turbine control valve flow rate

W_D = steam dump valve flow rate

W_B = steam line break flow rate

The specific volume and specific internal energy are given by:

$$v_h = \frac{V_h}{M_h} \qquad \text{……..(6.14-3)}$$

$$u_h = \frac{U_h}{M_h} \qquad \text{…….(6.14-4)}$$

The main steam pressure is determined from the equation of state (i.e. steam table look-up) :

$$P = f(v_h,\ u_h) \qquad \text{…….(6.14-5)}$$

The flow between the reactor dome and the main steam system has the following form:

$$P_{DOME} - P_h = K_V \frac{1}{2}\frac{W|W|}{\rho_h A_V^2} + K_{NZ}\frac{1}{2}\frac{W|W|}{\rho_h A_{NZ}^2} \qquad \text{……(6.14-6)}$$

Where

P_{DOME} = reactor steam dome pressure

P_h = main steam pressure

K_V = main steam isolating valve loss coefficient

K_{NZ} = flow restrictor loss coefficients

W = steam flow rate

A_V = total isolation valve flow area

A_{NZ} = flow restriction throat area

ρ_h = steam density

The steam flow rate determined by equation (6.14-6) should not exceed choke flow conditions. Steam flow rate through the turbine valves and steam dump valves and the steam line break flow, are all assumed to be choked flow.

6.15 CONTROL AND PROTECTION SYSTEMS

The control systems available in this simulator include those systems as described in section 3.2 “BWR Control Loops”. In this section, brief model descriptions are provided for the following systems:

(1) Control rods control
(2) Recirculation flow control
(3) Reactor pressure control
(4) Reactor water level control
(5) Turbine power control
(6) Turbine steam bypass system
(7) Protection system

6.15.1 Control rods control system

The control rods control system and the reactor power control system are illustrated in the following simplified block diagram.

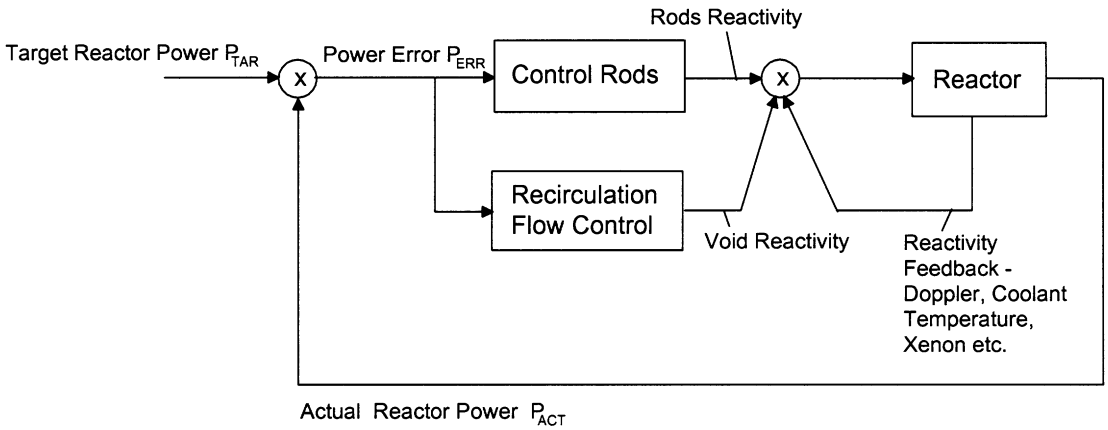

FIG. 7. Simplified block diagram for reactor power control.

- The target reactor power P_{TAR} selected by operator input is compared with the current reactor power, obtained by flux detectors and core temperature measurements. The power error signal, $P_{ERR} = P_{ACT} - P_{TAR}$ is sent to control rods controller, and the recirculation flow controller (see Figure 8).
- In response to the power error signal, the rod drive system will adjust the position of the rods inside the core according to the Power/Flow Map (see Section 3.3). The simplified explanation of the rods control logic is:

  (a) For reactor power < 65%,

  - If $P_{ERR} < 0$, move the rods "out" to increase reactor power.
  - If $P_{ERR} > 0$, move the rods "in" to decrease reactor power.
  - If $P_{ERR} = 0$, no movement of control rods.

  (b) For reactor power > or = 65%,

  - Recirculation flow controller is in control of reactor power (see below).
  - Control rods will be moved "in" or "out" automatically to assist the recirculation flow controller in controlling reactor power, ONLY IF the absolute value of power error, $ABS(P_{ERR})$, is greater than a certain deadband. Under normal circumstances, $ABS(P_{ERR})$ will not exceed this deadband, because the recirculation flow controller is controlling reactor power within this deadband.

6.15.2 Recirculation flow control

- In response to power error signal, the recirculation flow control derives a "core flow setpoint" according to the Power/Flow Map (see Section 3.3).

- The core flow controller compares this setpoint versus the current core flow, and generates a control signal for the speed controller for the reactor internal pumps (RIP).
- The speed controller in turn will change the frequency of the induction motor that drives the pump to the speed required to achieve the core flow setpoint.
- Different pump speed will give rise to different pump dynamic head in the core circulation flow path, resulting in different core flow. The changes in core flow will alter the void density of the two-phase water in the core, a moderating material used to slow the fission neutrons. The end result is a change in reactivity due to changes in void density.

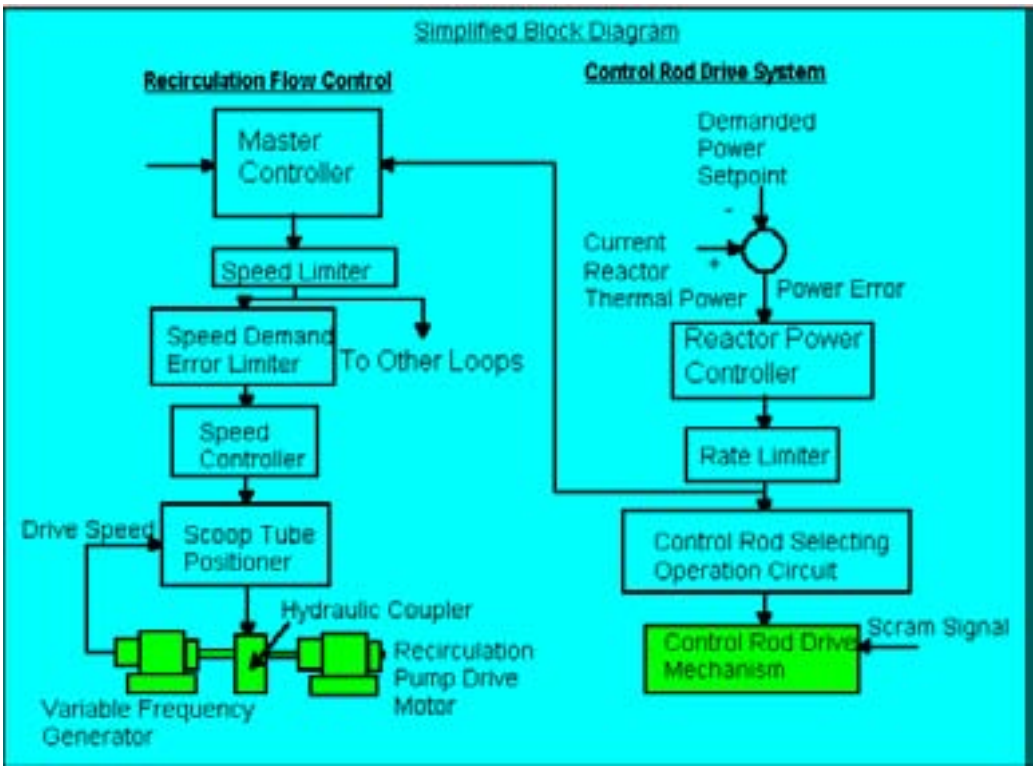

FIG. 8. Simplified control block diagram for control rod drive system and recirculation flow control.

6.15.3 Reactor pressure control system

The reactor pressure is automatically controlled to be constant. See detailed description in section 3.2 " BWR Control Loops".

For that purpose, a reactor pressure controller (RPC) is provided and is used to regulate the turbine inlet steam pressure by opening and closing the turbine governor control valve and the turbine bypass (or called steam bypass) valve.

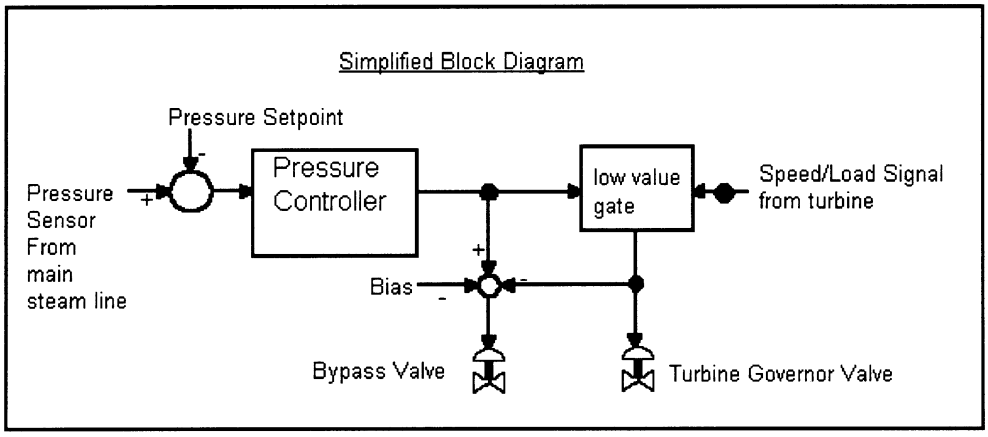

FIG. 9. Simplified reactor pressure controller block diagram.

Currently, the steam generator pressure setpoint is set at plant design pressure of 7170 KPa.

6.15.4 Reactor water level control system

Reactor water level control is achieved through the use of the three-element controller. The level controller is a PI reset controller adjusted to provide mostly integrating action and very little proportional signal to trim the feedwater flow. This controller has the following equation formulation:

$$M_L = K_{CL} * (e_L + (1/\tau) \int e_L \, dt) \quad \text{.....(6.15.4-1)}$$

Where

M_L = reactor level controller signal to control valve

K_{CL} = proportional gain

e_L = reactor level error

τ = reset time constant

Feedwater flow/steam flow controller is also a PI controller adjusted to provide mostly proportional action.

$$M_{FS} = K_{CF} * (e_{FS} + (1/\tau) \int e_{FS} \, dt) \quad \text{.....(6.15.4-2)}$$

Where

M_{FS} = reactor flow controller signal to control valve

K_{CF} = proportional gain

e_{FS} = flow error = steam flow - feedwater flow

τ = reset time constant

After comparing steam flow with feedwater flow and correcting for level, the three element controller generates a total control signal $M = M_L + M_{FS}$ to manipulate feedwater control

valve position, which will eventually provides the adjusted feedwater flow rate to the steam generators.

6.15.5 Turbine power control system

- The turbine power control system involves a turbine governor control system which will regulate the steam flow through the turbine to meet target load by controlling the opening of the turbine governor valve.
- Under normal operation, the reactor pressure control (RPC) keeps the inlet pressure of the turbine constant, by adjusting the opening of the "turbine speeder" gear which controls the opening of the governor valve.
- Should the generator speed increase due to sudden load rejection of the generator, the speed control unit of the turbine governor system will take control over the reactor pressure control (RPC) and will close the turbine governor valve. Similar override situations apply for abnormal conditions in turbine such as turbine run-back, and turbine trip.

6.15.6 Turbine steam bypass control system

As described in (6.15.3), reactor pressure is maintained at an equilibrium constant value determined by the heat balance between the input to the reactor core, and the turbine steam consumption. In the event of a sudden turbine load reduction, such as load rejection, or turbine trip, an automatic steam bypass system is provided to dump the steam to the condenser, if the reactor pressure exceeds a predetermined setpoint. See more details in Section 3.2.

6.15.7 Protection system

(1) Reactor scrams:
- High neutron flux/low core flow —
  If at any time, the current reactor power exceeds 113% of the power designed for the current flow rate in accordance with the Power/Flow Map, the reactor will be scrammed.
- High drywell pressure/LOCA detected
- Reactor water level low —
  Low level scram SP < 11 m ; (normal level = 13.4 m)
- Reactor pressure high —
  Scram SP > 7870 KPa
- Reactor water level high —
  Scram SP > 14.5 m; (normal level = 13.4 m)
- Main steam isolation valve closed/reactor isolated
- Main steam line radioactivity high
- Turbine power/load unbalance — loss of line
- Earth acceleration high
- Manual scram

(2) Control rods "Blocked" — as mentioned in Section 3.3, if at any time the current power exceeds 105% of the power designed for the current flow rate (in accordance with the

maximum power-flow line in the Power/Flow Map), the control rods withdrawal will be "blocked" until the power drops to 5% less than the current value.

(3) Control rods "Run-in" — as mentioned in Section 3.3, if at any time the current power exceeds 110% of the power designed for the current flow rate (in accordance with the maximum power-flow line in the Power/Flow Map), the control rods will be inserted into the core to reduce power quickly, and the "Control Rods Run-in" will be stopped until the power has been reduced to 10% less than the current value.

(4) Emergency core cooling injection — as mentioned in Section 3.1, in the unlikely event of major accidents inside the drywell, such as the feedwater line break, steam line break, and reactor bottom break, these breaks will cause high pressure in drywell, which in turn will trigger the LOCA (loss of coolant) signal. As a result, ECC will be started, and reactor will be scrammed, and isolated.

6.15.8 Automatic responses to design basis events accidents

The safety systems for BWR involve the following layers of defense against design basis events accidents:

(1) Reactor protection — control rods blocked; control rods run-in, boron injection, and reactor scram.
(2) Containment isolation — in the event of steam line break, feedwater line break, LOCA
(3) ECCS actuation — core spray for decay heat removal.
(4) Safety relief valve opening to suppression pool — to crash cool and relieve high pressure in reactor pressure vessel.
(5) Suppression pool cooling - to provide long term cooling of the isolated containment in case of LOCA.

Appendix

BWR TECHNICAL DATA

General plant data		
Power plant output, gross	1385	MW(e)
Power plant output, net	1300	MW(e)
Reactor thermal output	3926	MWth
Power plant efficiency, net	33.1	%
Cooling water temperature	≈ 28.0	^{o}C
Nuclear steam supply system		
Number of coolant loops	1	
Steam flow rate at nominal conditions	2122	kg/s
Feedwater flow rate at nominal conditions	2118	kg/s
Reactor coolant system		
Primary coolant flow rate	14502	kg/s
Reactor operating pressure	7.07	MPa
Steam temperature/pressure	287.8/7.07	^{o}C/MPa
Feedwater temperature	215.6	^{o}C
Core coolant inlet temperature	278	^{o}C
Core coolant outlet temperature	288	^{o}C
Mean temperature rise across core	10	^{o}C
Reactor core		
Active core height	3.710	m
Equivalent core diameter	5.164	m
Heat transfer surface in the core	9254	m^2
Fuel weight	159	t U
Average fuel power density	24.7	kW/kg U
Average core power density	50.6	kW/l
Thermal heat flux, F_q	424	kW/m^2
Enthalpy rise, F_H	273	
Fuel material	Sintered UO_2	
Fuel (assembly) rod total length	4470	mm
Rod array	10x10, square lattice	
Number of fuel assemblies	872	
Number of fuel rods/assembly	92	
Number of spacers	8	
Enrichment (range) of first core, average	2.0 (appr.)	Wt%
Enrichment of reload fuel at equilibrium core	3 to 4	Wt%
Operating cycle length (fuel cycle length)	24	months
Average discharge burnup of fuel [capability]	>50,000	MWd/*t*
Cladding tube material	annealed, recrystallised Zr 2	
Cladding tube wall thickness	0.66	mm
Outer diameter of fuel rods	10.3	mm
Fuel channel/box; material	Zr-2	
Overall weight of assembly, including box	300	kg

Uranium weight/assembly	181	kg
Active length of fuel rods	3.810	mm
Burnable absorber, strategy/material	axial and radial grading/ Gd_2O_3 mixed with fuel	
Number of control rods	205	
Absorber material	B_4C and Hafnium	
Drive mechanism	electro-mechanical/hydraulic	
Positioning rate	30	mm/*s*
Soluble neutron absorber	Boron	

Reactor pressure vessel

Inner diameter of cylindrical shell	7 100	mm
Wall thickness of cylindrical shell	190	mm
Total height, inside	21 000	mm
Base material:	cylindrical shell	low-alloy carbon steel
RPV head	[to ASTM A533, grade B, ASTM A508, class 3, or equiv.]	
lining	stainless steel	
Design pressure/temperature	8.62/301.7	MPa/^{o}C
Transport weight (lower part w/rigging)	1164	t
RPV head	≈100	t

Reactor recirculation pump

Type	variable speed, wet motor, single stage, vertical internal pump	
Number	10	
Design pressure/temperature	same as for RPV	MPa/^{o}C
Design mass flow rate (at operating conditions)	1453 (each)	kg/s
Pump head	0.287	MPa
Rated power of pump motor (nominal flow rate)	≈800	kW
Pump casing material	same as for RPV	
Pump speed (at rated conditions)	≤1500	rpm

Primary containment

Type	Pressure-suppression/ reinforced concrete	
Overall form (spherical/cyl.)	cylindrical	
Design pressure/temperature	310.3/171.1	kPa/^{o}C
Design leakage rate	0.5	vol%/day
Is secondary containment provided?	Yes	

Reactor auxiliary systems

Reactor water cleanup,	capacity	42.36	kg/s	
	filter type	deep bed		
Residual heat removal,	at high pressure		kg/s	
	at low pressure (100 ^{o}C)		253.8	MW
Coolant injection,	at high pressure (HPCF)		36.3 kg/s	
	at low pressure (LPCF)	253.8	kg/s	

Power supply systems

Main transformer,	rated voltage	24/525	kV
	rated capacity	1660	MVA
Plant transformers,	rated voltage	24/4.16/13.8	kV
	rated capacity	50/15/35	MVA
Medium voltage busbars (6 kV or 10 kV)		13.8/4.16	kV
Standby diesel generating units: number		3	
	rated power	6.57	MW
Number of diesel-backed busbar systems		3	
Voltage level of these		4160	V AC

Turbine plant

Number of turbines per reactor	1	
Type of turbine(s)	six flow, tandem compound, single reheat	
Number of turbine sections per unit (e.g. HP/LP/LP)		1 HP/3 LP
Turbine speed		1800 rpm
HP inlet pressure/temperature	6.792/283.7	MPa/^{o}C

Generator

Type	3-phase, turbo-generator	
Rated power	1620	MVA
Active power		1385 MW
Voltage	24	24 kV
Frequency	60	Hz

Condenser

Type	shell type (3 shells)	
Number of tubes	1 tube pass/shell	
Heat transfer area	124,170	m^2
Cooling water flow rate	34.68	m^3/s
Condenser pressure (HP shell)	11.75	kPa

Condensate pumps

Number	4 x 50%	
Flow rate	≈ 435	kg/s
Pump head	3.82	MPa

Condensate cleanup system

Full flow/part flow	Full flow
Filter type (deep bed or rod type)	deep bed

Feedwater pumps

Number	3 × 65%	
Flow rate	≈ 1000	kg/s
Pump head	6	MPa
Feedwater temperature (final)	216	^{o}C

Condensate and feedwater heaters

Number of heating stages,	low pressure	3 × 4
	high pressure	2 × 2