INVESTIGATION ON CONVERSION OF *I*-GRAPHITE FROM DECOMMISSIONING OF CHERNOBYL NPP INTO A STABLE WASTE FORM ACCEPTABLE FOR LONG TERM STORAGE AND DISPOSAL

BORYS ZLOBENKO, YRIY FEDORENKO, VICTOR YATZENKO, BORYS SHABALIN, VADIM SKRIPKIN

National Academy of Sciences of Ukraine: State Institution “Institute of Environmental Geochemistry”

Department of Nuclear Geochemistry (Radiocarbon Laboratory), Kyiv, Ukraine

INTRODUCTION

For Ukraine, the main radiocarbon (^{14}C) source is irradiated graphite from Chernobyl Nuclear Power Plant. The ChNPP is a decommissioned nuclear power station about 14 km northwest of the city of Chernobyl, and 110 km north of Kyiv. The ChNPP had four RBMK reactor units. The commissioning of the first reactor in 1977 was followed by reactor No. 2 (1978), No. 3 (1981), and No.4 (1983). Reactors No.3 and 4 were second generation units, whereas Nos.1 and 2 were first-generation units. RBMK is an acronym for "High Power Channel-type Reactor" of a class of graphite-moderated nuclear power reactor with individual fuel channels that uses ordinary water as its coolant and graphite as its moderator. The combination of graphite moderator and water coolant is found in no other type of nuclear reactor.

Parameters RBMK-1000	
Thermal power, MW	3840
Core diameter, m	11.80
Core height, m	7.0
Core volume, m	765
Mean specific power per core volume, MW/m	5.02
Mean specific power per fuel quantity, MW/t	20.8
Mean power per fuel rod length, kW/m	18.3

On September 9, 1982, a partial core meltdown occurred in Reactor No. 1 at the Chernobyl plant. The extent of the accident was not made public until several years later. The reactor was repaired and put back

into operation within months.https://en.wikipedia.org/wiki/Chernobyl_Nuclear_Power_Plant_-cite_note-7 On Saturday, April 26, 1986, a disaster occurred at Reactor No. 4, which has been widely regarded as the worst accident in the history of nuclear power in the world.

The approved ChNPP Decommissioning Program [1] establishes preferred decommissioning strategy-deferred dismantling (SAFATOR). According to the National program of Chernobyl NPP decommissioning and Shelter object, decommissioning is to be carried out in four stages:

A. **Shut down (preparatory stage for decommissioning)** - stage during which nuclear fuel will be removed and transported in the Spent Fuel Storage Facility intended for long-term storage. The current stage - during which the major task, defining stage duration, is carried out – nuclear fuel should be removed from power units. Time for completion is not earlier than 2014.

B. **Final shutdown and preservation of reactor installations.** During this stage preservation of reactors and most radioactively contaminated equipment (roughly till 2028) will be carried out.

C. **Safe enclosure of reactor installations** for the period during which natural decreasing of radioactivity up to the acceptable level should occur (roughly till 2045).

D. **Dismantling of reactor installations.** During this stage the equipment will be dismantled and site will be cleaned with the purpose to release in maximum restrictions and regulatory control (roughly till 2065)

Today, there have been significant delays in decommissioning the Chernobyl NPP.

2. OVERVIEW OF GRAPHITE ELEMENTS OF RBMK-1000 REACTOR

Inside the hermetic enclosure of the reactor and mounted on the bottom plate there is the graphite core, consisting of 2488 vertical columns. The blocks are stacked inside the reactor vessel into a cylindrical core with a diameter and height of 14 by 8 meters. The moderator graphite blocks are manufactured from GR-280 graphite. The size of a blocks are 600 (500,300,200) mm high and by 250 mm x 250 mm square, with a central hole 114 mm diameter through the longitudinal axis of the blocks for the fuel and control channels [2].

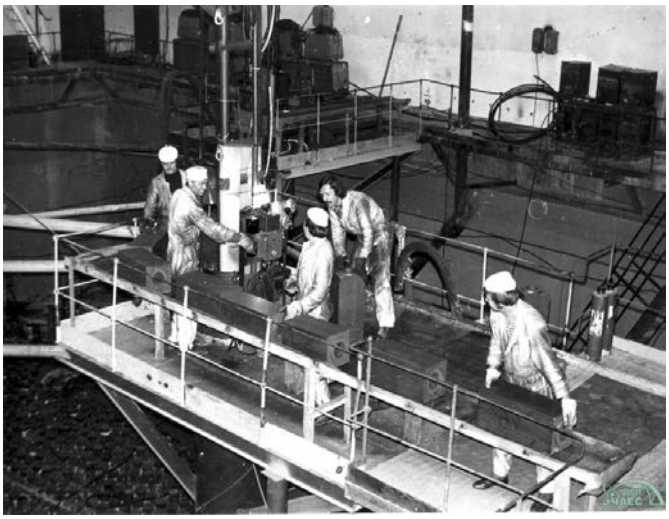

Installation of graphite stack (www.chnpp.gov.ua)	Graphite blocks GR-280

The fuel channels consist of welded zircaloy pressure tubes 80 mm in inner diameter with 4 mm thick walls, led through the channels in the center of the graphite moderator blocks. For protection from radiation in the gap between the pipe channels metal steel sleeves of 700 mm in height are placed in the upper region. The gap between the pipe and the channel path in the vicinity of the bottom metal is filled with graphite bushes. The pressure tube is held in the graphite stack channels with two alternating types of 20 mm high split graphite rings; one is in direct contact with the tube and has 1.5 mm clearance to the graphite stack, the other one is directly touching the graphite stack and has 1.3 mm clearance to the tube; this assembly reduces transfer of mechanical loads caused by neutron-induced swelling, thermal expansion of the blocks, and other factors to the pressure tube, while facilitating heat transfer from the graphite blocks.

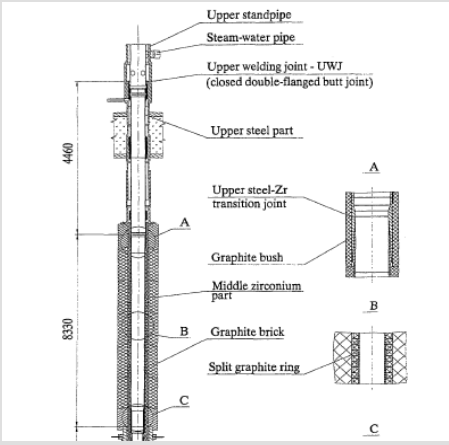

Technological channels (TC) with graphite elements

The debris of split graphite ring

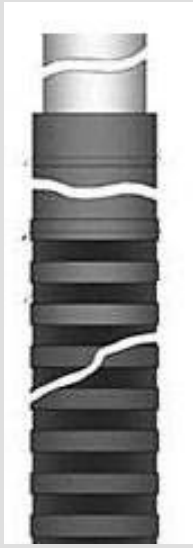

The split graphite rings are manufactured from a quality graphite GRP-2-125. About 80–85% of the core thermal power is removed by the fuel rod coolant channels, via the graphite rings. The small clearance between the pressure channel and the graphite block makes the graphite core susceptible to damage. If the pressure channel deforms, *e.g.* by too high internal pressure, the deformation or rupture can cause significant pressure loads to the graphite blocks and lead to their damage, and possibly propagate to neighbouring channels. In the reactor core unit "1" is a 1692 TC and 195 CPS (control-rod) channels, on the unit "2" is a 1693 TC and 195 CPS channels, on the unit "3" 1661 TC and 227 channels of CPS. Most of the reactor control rods are inserted from above; 24 shortened rods are inserted from below and are used to augment the axial power distribution control of the core. With the exception of 12 automatic rods, the control rods have a 4.5 m long graphite section at the end, separated by a 1.25 m long telescope (which creates a water-filled space between the graphite and the absorber), and a boron carbide neutron absorber section.

Unit 4 ChNPP -Reactor hall, 1983 (www.chnpp.gov.ua)	RBMK 1000-Reactor hall

The role of the graphite section, known as "displacer," is to enhance the difference between the neutron flux attenuation levels of inserted and retracted rods, as the graphite displaces water that would otherwise act as a neutron absorber, although much weaker than boron carbide; a control rod channel filled with graphite absorbs fewer neutrons than when filled with water, so the difference between inserted and retracted control rod is increased.

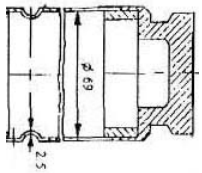

The graphite section, known as "displacer", 1986	The displacer with graphite GR-93

Graphite displacer control rods in a separate group, as it is in contrast to the rest of the graphite as it was irradiated at a temperature of not more than 50^0C and may contain stored energy (Wigner energy). The filling of the CPS consists of boron carbide (enriched isotope ^{10}B) + dysprosium titanate. The graphite in the end portion has been present more than 26 years ago in the RBMK CPS but, after the Chernobyl accident, this material was removed in all cases during the 'modernisation'. When the control rod is fully retracted, the graphite displacer is located in the middle of the core height, with 1.25 m of water at each of

its ends. The need for additional surveys displacer graphite control rods and development of technology for dealing with them.
The reactor operates in a helium - nitrogen atmosphere (70-90% He, 10-30% N_2). The heat removed from the graphite by this gas circulation is minimal.

3. CHARACTERIZATION OF GRAPHITE USED OF CHERNOBYL NPP

Nuclear graphites in the former Soviet Union have been manufactured from a range of raw materials using different manufacturing processes, with differing impurity levels. Original impurities in the reactor graphite include a large number (up to 30) of naturally occurring elements with the concentration 10^{-4}-10^{-6} % by mass, many of which form long-lived radionuclides through the neutron reactions.

Original impurities in the reactor graphite include a large number (up to 30) of naturally occurring elements with the concentration 10^{-4}–10^{-6}% by mass, many of which form long-lived radionuclides through the (n, γ), (n, p), (n, α), (n, 2n), and (n, t)- reactions. In addition to this group of radionuclides, actinides and fission product occur in the graphite due to several causes, the main of which is delivery of fuel particles to the graphite stack resulting from leaks of coolant through leaky joints (mainly through bottom steel–zirconium couplings) and from the presence of non tight fuel assemblies in the reactor.

Three major contamination sources for the graphite are:

A. Neutron activation of impurities;
B. Delivery of radionuclides as a result of technological incidents during the reactor operation;
C. External contamination of the graphite by radionuclides of corrosive origin that is present in the CP water.

3.1. Characterizations the microstructure of the graphite

In the course of this CRP work, unirradiated samples of graphite which have been stored since the reactors were constructed have been investigated: these are both…

- the split graphite rings from technological channels of the Chernobyl NPP reactor (GRP-2-125 graphite);
- the samples graphite stack (GR-280).

In addition, samples of irradiated graphite rings were taken after the termination of irradiation (1991): these were kept in water in the cooling pond near reactor [3,4] and graphite after accident on 4 Unit.

For characterization of the graphite, optical microscopy, SEM and EDAX analysis and XRD analysis were used.

The research was carried out to investigate the structure and morphology of the surface layer of the graphite stack GR-280 and fine graphite composite GR-2-125, which has a polycrystalline structure with crystals held together by a binder phase.

The X-ray powder diffraction investigation (Cu K_α X-ray source) was the most available technique to measure the crystal structure of graphite. Silicon standard was used to determine the peak position and peak broadening. It was shown that the interlayer spacing (d_{00l}) expands in the treated graphite. It was also established that the X-ray patterns indicated typical reflections characteristic of graphite, but the extent of their broadening was different. Crystallographic parameters has been calculated from the Scherer equation using the (00l) to Lc and (hk0) to La.

Based on the diffraction patterns, estimates were made of the distance between planes and the magnitude of the coherent scattering (OCD). The reflex broadening of the diffraction peak (00l) corresponds to the size of OCD ≈ 350Å. The diffraction picture of the powder sample indicates that, in fact, only one well-

defined broad diffraction peak exists. The shape of this diffraction peak indicates the presence of two fractions with different dispersion and crystallinity properties in the sample. It is quite difficult to obtain high quality data for graphite just by using X-ray powder diffraction. The results of some experiments were presented at the XX International conference on physics of radiation phenomena and radiation material science [5].

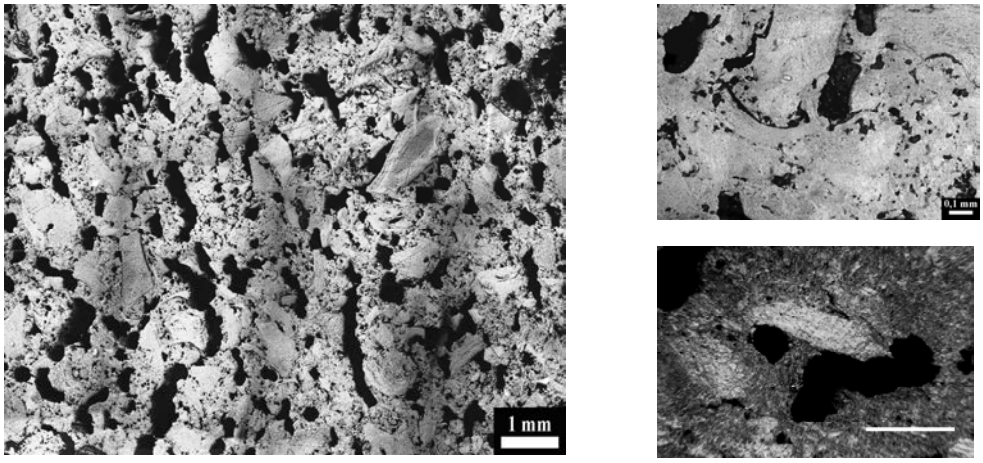

The optical microscopy GR-280 graphite The reflected light, nicols parallel.
The optical microscopy GR-280 graphite was investigation microstructural characterizations of the materials, the fraction (crystalline) and pore size. The samples polished thin section and the reflected light with nicols parallel and perpendicular

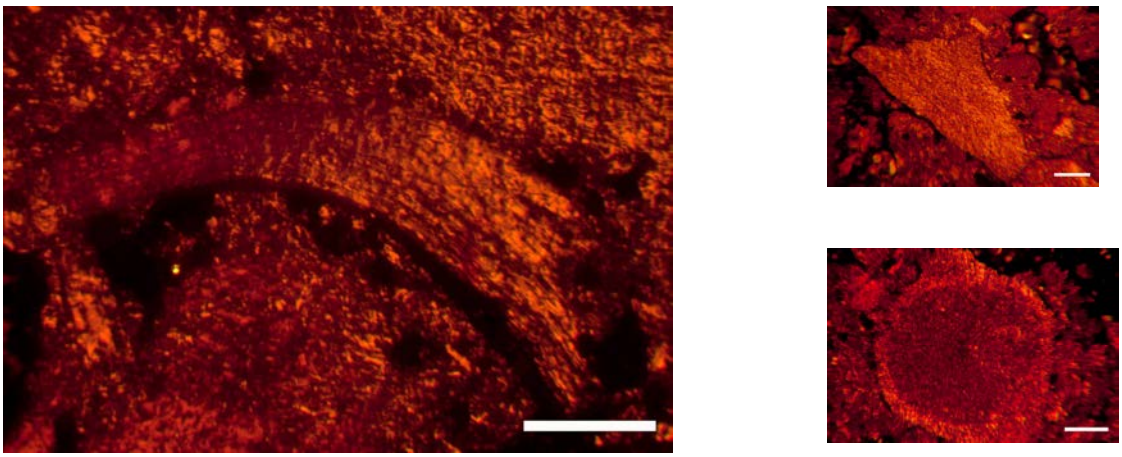

The optical microscopy GR-280 graphite The reflected light, nicols perpendicular.

Filling:
Grain size of the filler - 0.5-1.5 mm, irregularly angled shape. The internal structures are homogeneous or banded more coarse aggregate. The crystal size is 10-20 microns. The bulk of the binder is fine-grained crystallites of about 1 micron.

TABLE 1. FRACTION SIZE OF GRAPHITE

Fraction, size, µ	**Graphite, GR-280**	**Graphite, GR-93**
	Weight, %	**Weight,%**
>90	46	**55**
>500	22	**19**
>1200 - <500	18	**26**
>2200 - <1200	**14**	**-**

Adsorption of gases in the reactor graphite in the course of the reactor operation may to a large extent determine its activity [6]. The major contribution to accumulation of ^{14}C comes from the reaction on nitrogen $^{14}N(n, p)^{14}C$, and nitrogen is mainly accumulated through its adsorption during the reactor operation. Tritium in graphite arises from the reaction $^{14}N + n = {}^{12}C + {}^{3}T$. If this issue is ignored, wrong conclusions can be drawn and, accordingly, mistakes can be made in planning the removal of the Chernobyl NPP power units from service and solving the arising problems. All these uncertainties require serious experimental studies.

Therefore, only experimental determination of the isotope content and induced activity may yield real information on the radioactive status of the graphite. Some experimental measurements of the ^{14}C inventory in the RBMK-1000 reactor graphite were performed by institutes of the Ukrainian Academy of Sciences (Institute for Nuclear Research, Institute Environmental Geochemistry) and by the Russian Research Centre Kurchatov Institute within the frame of contract with Chernobyl Nuclear Plant.

Studies were conducted in 2003 of the stored energy (Wigner energy) for graphite rings reactor Unit 2 . The average temperature during the operation of graphite rings GRP-2-125 is 310^0C, and the total neutron fluence ~ 3E +22 neutrons/cm^2. It was established experimentally that the stored energy is 54-125 J/g for different rings, and the speed of its allocation does not exceed 0.376 J/g ×deg.

Due to the fact that the average temperature of the graphite in the stacks during the operation was about 500^0C, significant amounts Wigner energy is accumulated in the graphite was not laying.

Experimental studies have shown that the $A_{specific}$ of ^{14}C for graphite rings is $10^{+4} \div 10^{+5}$Bq/g, and is determined primarily by radionuclides: ^{14}C (55%), ^{3}H (4%), ^{36}Cl (5.5%). Some samples also recorded significant activity ^{60}Co. The obtained data can be shared, to a first approximation, on the graphite GRP-2-125 reactor units number 1 and number 3, taking into account their effective working time on power/energy production per unit.

For the first time integrated β-spectrometric and radiometric investigations, α- and X-ray spectrometry of GRP-2-125 graphite from ChNPP Unit 2 were carried out. An analysis of obtained data has shown that it is necessary to http://inis.iaea.org/search/search.aspx?orig_q=GRP-2-125+RBMK&src=ics&btnG=Search - #carry out the comparison with experimental and calculated results of graphite activity research only on the basis of radioactive nuclide ^{14}C from irradiated reactor graphite. Nuclides ^{3}H and ^{36}Cl distributed uniformly among the samples. The others nuclides distributed inhomogeneous. Inhomogeneous distribution was detected for ^{60}Co, ^{90}Sr and ^{137}Cs only in one sample. Presence of ^{137}Cs and $^{154,155}Eu$ indicated a contamination by fission products. The activity of irradiated GRP-2-125 graphite was defined by the ^{14}C content as well as other radioactive nuclides of impurity and technological origin (^{3}H, ^{36}Cl, ^{55}Fe, ^{60}Co, ^{63}Ni, ^{93}mNb, ^{94}Nb, ^{133}Ba, ^{134}Cs) and fuel fission products (^{90}Sr, ^{137}Cs, ^{154}Eu, ^{155}Eu) [1]. Graphite rings Chernobyl RBMK-1000 reactor unit number 2 were sampled. Investigated technological channels number's V299, V358, V427, G209 and G75 (table 2) sitting is in the "plateau" of the reactor and at the close of operation have approximately the same energy production - about 7 GW/day.

TABLE 2. ISOTOPE CONTENT OF THE GRP-2-125 GRAPHITE RINGS.

Samples	Specific concentration, $Bq.g^{-1}$			Total activity, $Bq.g^{-1}$
	^{3}H	^{14}C	^{36}Cl	
B 427- 603	690	4080	990	5760
B 427- 962	1230	12100	938	14268
B 427- 1062	490	8520	699	9709
B 427- 1145	1050	28000	1126	30176
G 75- 603	620	10840	1084	12544
G 75- 962	610	4000	1102	5712
G 75- 1062	1740	13280	943	15963
G 75- 1145	605	5600	1243	7448
G 209- 603	680	14400	1159	16239
G 209- 962	520	7240	1093	8853
G 209- 1062	820	14600	995	16415
G 209- 1145	750	10720	1384	12854
V 299- 603	710	8520	990	10220
V 299- 962	450	10600	1004	12054
V 299- 1145	980	9080	1478	11538
V 299- 1062	650	5360	1417	7427
V 358- 603	1290	18000	821	20111
V 358- 962	780	6320	929	8029
V 358- 1062	890	10400	1131	12421
V 358- 1145	420	8960	1084	10464

The article [7] deals with the results of the comparative analysis of specific activity and nuclide composition of graphite elements of ChNPP Unit 2 reactor channels (graphite of split rings and sleeves - GRP-2-125). The http://inis.iaea.org/search/search.aspx?orig_q=GRP-2-125+RBMK&src=ics&btnG=Search - #comparative analysis was performed using the design data on ChNPP Unit 1 graphite as well as the experimental data on radioactive contamination of Russian industrial reactors graphite stack. From the analysis results it was concluded that the design value of specific activity of main nuclides determining the radioactive contamination of the GRP-2-125 graphite was overestimated in comparison with the experimental data. According to the calculations [8, 9], after the shutdown of the RBMK reactor the graphite stack and graphite elements of channels may account for as much as 80% of the total amount of radioactive waste. However, the estimates are to a large extent dependent on the impurity content of the graphite.

4. CHEMICAL DECONTAMINATION OF GRAPHITE

The aim of the present research is to develop decontamination of graphite using an intercalation process in a mix of solutions an acid/ketone. The acid treatment of graphite is carried out by the wet process in which the graphite is immersed in a strongly oxidizing solution prepared by mixing a concentrated sulphuric acid with oxidizing agents.

Decontamination of Chernobyl NPP graphite is being investigated using an intercalation process. As a second step ("exfoliation"), cohesion between graphene layers is disrupted through ultrasound treatment. Intercalation compounds are formed by the insertion of atomic or molecular layers of a guest chemical species between layers in graphite material. The intercalation process occurs in highly anisotropic layered structures where the *intra* planar binding forces are very strong and the *inter* planar binding forces are very weak. When these conditions prevail, entire layers of guest species can be inserted between layers of the graphite. For example, several hundred different chemical species are known to intercalate into non nuclear graphite. Intercalation can be accomplished with various organic molecules such as amines, pyridine, hydrazine, n,n-dimethylformamide and triethylmethylammonium methylsulfate. The introduction of each intercalate layer into the graphite adds a substantial strain energy as the crystal expands to accommodate it. The resulting interlayer intercalate repulsion favours the insertion of a minimum number of intercalate layers, consistent with a given average intercalate concentration. Thus for a given intercalate concentration, the minimal energy state corresponds to a close-packed in-plane intercalate arrangement with the largest possible separation between a minimum number of intercalant layers. In practice it is possible to prepare single-staged graphite intercalation compounds (GICs) with only small (1-5%) admixtures of secondary-staged regions [10].

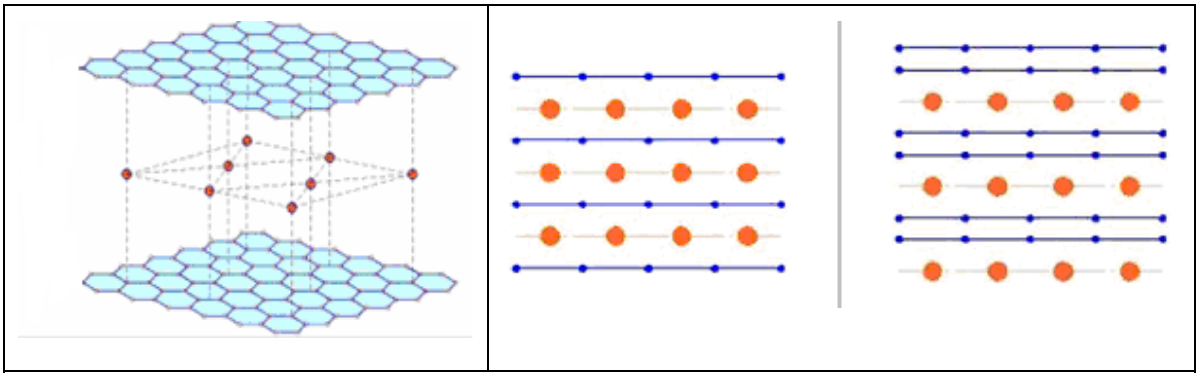

Scheme crystal lattice of intercalated graphite

4.1. Experimental

Graphite pieces were immersed in different ketones. The acid solution was prepared by mixing concentrated sulphuric acid and hydrogen peroxide (36%) in a ratio of 3:1. Chemical intercalation reaction and hydrolysis has a significant impact on the structural characteristics of the intercalated graphite, the degree of graphitization is an increase in the amount of broken C-C bonds. The oxidation treatment markedly increased lattice spacing in the graphite. The simplest method for stage characterization of intercalation compounds is x-ray diffraction based on (00l) reflections.

The aim of the present research is to develop decontamination of graphite using an intercalation process in a mix of solutions of acid/ketone. The samples used in this work were crushed and ground.

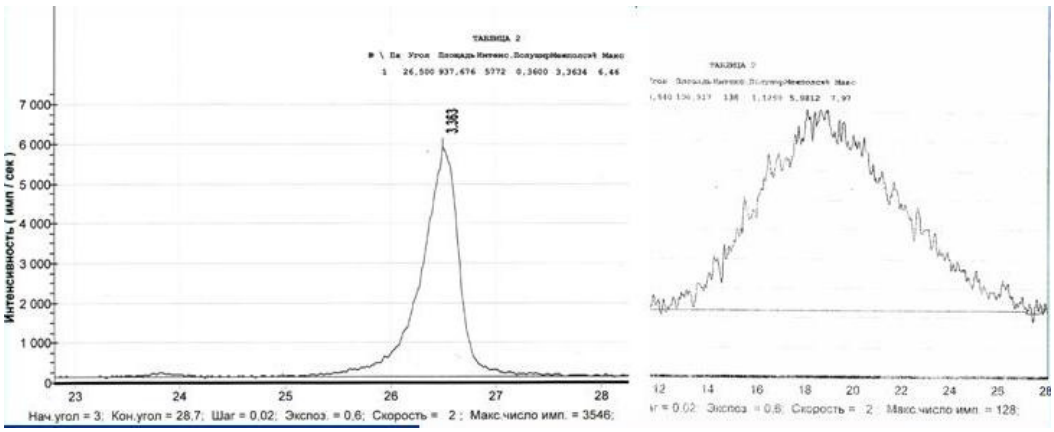

The 001 diffraction in the intercalated graphite gradually disappeared with an increasing reaction time, implying the expansion of graphite layers.

The classic graphite intercalated compounds are prepared by the wet process by adding intercalation of sulfuric acid in the presence of an oxidant (HNO_3, $KMnO_4$, H_2O_2). Intercalation between layers of the graphite lattice should be an increase the interlayer distance of graphite structure. The acid treatment of graphite was carried out by the wet process in which the graphite is immersed in a strongly oxidizing solution prepared by mixing a concentrated sulfuric acid with an oxidizing agent. Surface morphology exfoliated structure showing a numerous and complicated open canals.

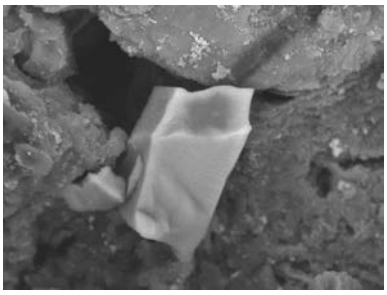

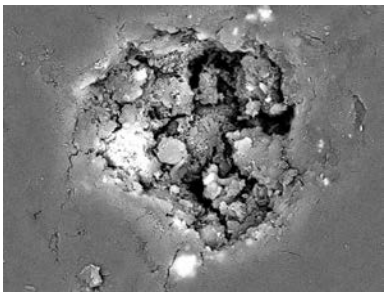

Surface morphology graphite after treatment.

Surface of original sample keeps much smooth surface than oxidized samples. The smooth surface of irregularity is increasing when the oxidation is progressing and the pore easy to observe.

Leaching experiments were providing for release of ^{14}C the from graphite after treatment. The results show that the ^{14}C radioactivity leached from graphite without oxide layer is less compared to ^{14}C leached from the same samples graphite with oxide graphene layer. The oxide graphene layer with ^{14}C has a potential for volatilization.

Vacuum pyrolysis was used for measuring the ^{14}C activity [11]:

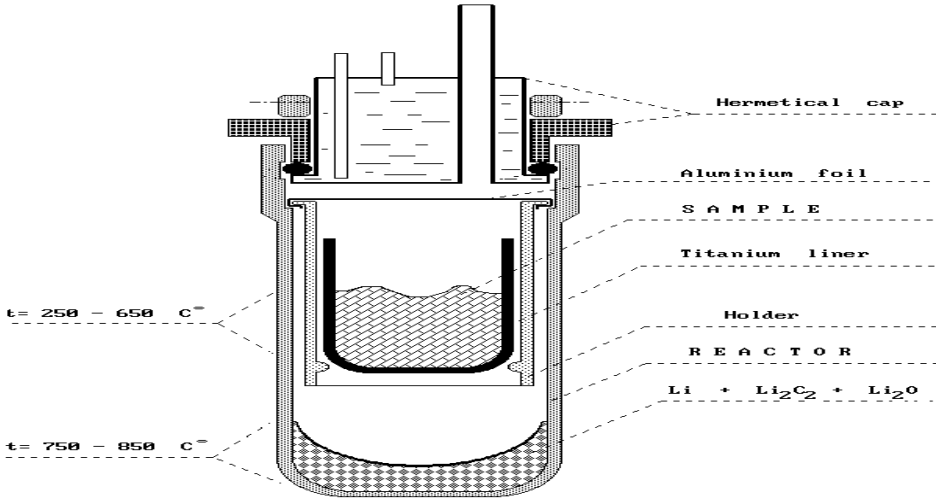

1. Material sample is mixed with manganese dioxide. Addition of manganese dioxide plays an important role. When the temperature is above 550^0C the manganese dioxide disintegrates with active oxygen liberation all over the volume of mixture. Oxygen liberation runs quietly, under the broad range of temperatures ($550\text{-}940^0$C).

2. Carbon materials therewith are oxidized to carbon oxide and dioxide, and in such kind are absorbed by melted lithium.

3. Resulting lithium carbide is subjected to hydrolysis.

Novel approach for technology *"LS vials"* developed for LSC Quantulus 1220TM

4. Gassing acetylene is converted into benzene on vanadium catalyst. It allows fractional separation of analysed carbon material during one sample preparation procedure**.** Vacuum pyrolysis represents a considerable simplification and accelerates LS radiocarbon analyses.

5. GRAPHITE ENCAPSULATION

We initiated the research on the encapsulation of graphite debris and dust in cement matrices with different additives (clay-cement, organo-clay cement) and concurrent determination of the leaching properties of these different matrices. Two different types of cement grout were produced according to mixture proportions with focus on water-cement ratio. All mixtures were prepared using commercially available Ordinary Portland cement (OPC-M500). The chemical composition of the OPC[1] is: C3S-52.34%: C2S-21.59%; C3A-10,04%; C4AF-9.01% and Gypsum-1.98%. Laboratory tests of cementitious materials for graphite encapsulation were performed to determine the basic properties and hydraulic data

[1] C3S is calcium oxide to silica in the ratio 3:1, and similarly; A is aluminium oxide and F is ferric oxide

(ASTM D 4284; ASTM D 5084). The pore structure and porosity change of the cement pastes were determined using standard method, and the results are presented in Table 3.

TABLE 3. GRAPHITE ENCAPSULATION INTO DIFFERENT GROUT MATRIXES

Sample	Matrix mix	Rate of capillary suction (grams/hour)	Total Porosity (%)
15% graphite load	1Admixture +10%clay +70% OPC	2,09	5,6
	2Admixture+10% clay+70% OPC	1,92	4,8
25% graphite load	1Admixture+15%clay +70% OPC	1,67	5,4
	2Admixture +15% clay+70% OPC	1,41	4,7
30% graphite load	1Admixture +30%clay +70% OPC	1,30	3,2
	2Admixture +30% clay+ 70%OPC	0,96	2,6

The admixture were used in conjunction with cement extenders to manufacture to determine the influence of cement extenders on the physical properties of matrix structures.

1) -15% graphite load	2)-25% graphite load	3)-30% graphite load

A short leaching test for graphite split ring was performed of the project. Leaching experiments were providing for understanding mechanisms of release C-14 the forms from graphite the immobilization in cement material. Studying of radiocarbon leaching kinetics test (modification of MCC-1 and applying the Soxhlet) showed that the samples after testing do not change their phase composition. The analysis release C-14 was below detection limits and no representative data available.

Design of the leaching experiment

6. GRAPHITE WASTE MANAGEMENT

A considerable amount of contaminated equipment and special items used during the operation of Chernobyl NPP have been accumulated. Currently, they are stored in cooling pools, technological shafts, and in a reactors core of Units 1-3. The total number of these special items (long-length waste) is about 26,000 units. According to the design dimensions of these special items are from 6 to 22 meters in length and up to 145 mm in diameter. Technological channels also include 19 pieces of the graphite sleeves and 163 graphite rings.

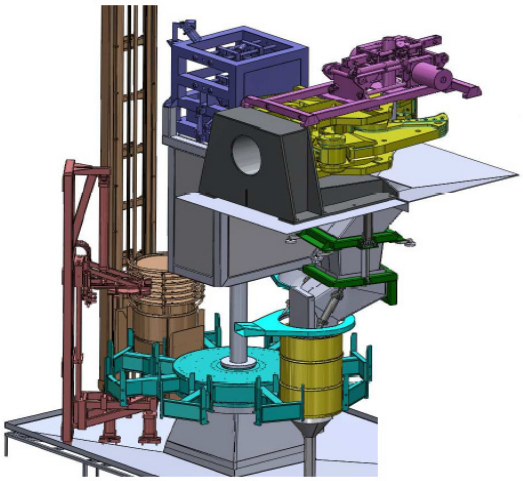

Line grinding long-length waste

A 'preferred' decommissioning strategy for Chernobyl RBMK Units 1 – 3 envisages safe storage until around 2045 with dismantling complete by 2064.

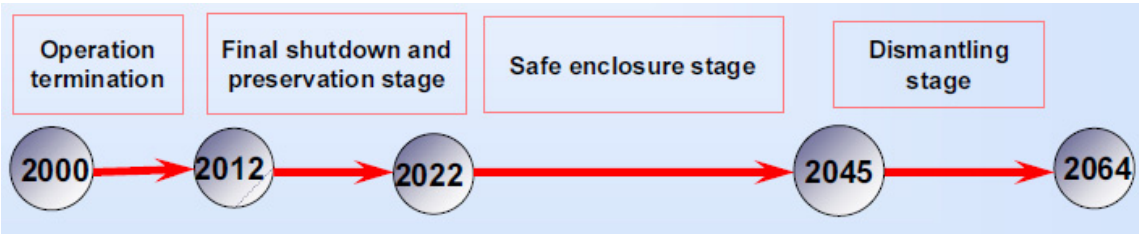

TABLE 4. THE WASTE INVENTORY OF IRRADIATED GRAPHITE WASTE OF CHORNOBYL NPP

Group	Volume, m^3	Weight, t	$A_{Specific.}$ of ^{14}C Bq/g	Graphite type
Graphite stack	3732	5280	~ E+4 ÷ E+5	GR-280
Graphite rings and bushings	328	372	~ E+4 ÷ E+5	GRP-2-125
Graphite displacer control rods	22	35		GR-93

At that point, the graphite rings and bushings will be packed in 165-(200) litre barrels and placed in a concrete container GTZ-2.6 and storage into an existing temporary storage facility alongside other wastes,

without grouting, for a period of up 50 years. The limiting values of total activity in these primary packages should be for 165-litre barrel of long-length special items (cuttings and milling) - 4,32 10^{12}Bq/barrel and the 200-litre barrel of graphite of low-and intermediate level (grinding matter) - 4,11 10^{10}Bq/barrel.

Graphite waste emplaced in the storage container without grouting

Separately, IEG work's is in progress on suitable grouts for a final disposal to a repository. Amount of rings and bushings are 372 tones. The waste inventories of irradiated graphite waste are the Chornobyl NPP - 5687t. (3732 m^3) and emergency graphite is 700t in Shelter.

Significant amount of graphite waste is currently nothing, and they will be formed only after the start of the grinding of long special items . By its radiation characteristics, they will be referred to the LLW-ILW. In addressing this problem at Chernobyl into account the fact that today in the world there is no unequivocal decision on how to deal with the contaminated graphite. Proposed processing technology graphite is expensive and unprofitable. Therefore, today Chernobyl focused on developing long-term reliable technology and safe storage of radioactively contaminated graphite.

CONCLUSIONS

In compliance with the requirements of the regulatory documents, the composition and activities of radionuclides accumulated in structural materials and structures during the operation of the NPP power unit must be evaluated before its removal from service. The first to be examined will be the main sources of radionuclides, which are the structures of the reactor, especially the graphite stack and other graphite elements.

No specific waste-acceptance criteria have been defined: however, work is in progress on this issue by SNRCU in compliance with international standards as expressed in ICRP 60 which defines acceptable public and operator doses. Irradiated reactor graphite management determined by the Law of Ukraine "On Radioactive Waste Management" N 255/95-VR 30 June 1995 on the HLW and LLW

Issues to be addressed:

• Uncertainty with terms of establishing a national geological repository may necessitate the construction of an interim storage facility or renewal exposure graphite stack;

• Lack of acceptance criteria for the disposal of graphite waste and appropriate container fleet in the future will need to repackage storage i-graphite waste;

• Need verification techniques and equipment for the characterization of graphite waste;

• The need for additional surveys displacer graphite control rods and development of technology for dealing with them;

• Handling graphite waste of "Shelter" (Unit 4).

REFERENCES

1. The "Complex Program" of Chernobyl NPP decommissioning is developed by Ukrainian authority on the basis of the Decision the Cabinet of Ministers of Ukraine from March 29, 2000 ¹ 598 " About the termination of Unit 3 operation and final Chernobyl NPP decommissioning "(in Ukrainian).
2. ABRAMOV M.A., *et al*. "The Channel Power Reactor RBMK" al. Edited by Yu.M.CHERKASHOVA. M., RDIPE, 632 p. (in Russian) (2006)
3. BONDAR'KOV M.D. *et al.* "Research of Radioactive Contamination of RBMK-**r**eactor graphite"; ISSN 1606-6723, Zbyirnik Naukovikh prats' Yinstitutu Yadernikh Doslyidzhen', no.3/**16**, , p. 96-103 (in Ukrainian) (2005)
4. BOBRO D.G. *et al.* "Comparative Analysis of Experimental and Design Data of Specific Activity and Nuclide Composition for Graphite Elements of ChNPP Unit 2 Reactor Channels"; ISSN 1608-2214, J. Yadernaya i Radiatsionnaya Bezopasnost', v. **6**(3), p. 78-86 (in Russian) (2003)
5. ZLOBENKO B.P., *et al*. *"*Investigation of Microstructure Characteristics of Nuclear Graphite", A Book of Abstracts, XX International conference on physics of radiation phenomena and radiation material science, 11-15 September 2012, Alushta, Ukraine (in Russian) (2012)
6. BYLKIN B.K., *et al.* "Calculated Evaluations of Radiation Characteristics of Irradiated Graphite after Final Shutdown of NPPs with RBMK"; Atomnaya Energija, **96**, 6:451-457 (2004) (in Russian).
7. BONDAR'KOV M. D. *et al*. "Activity Study of Graphite from the Chernobyl NPP Reactor"; Izvestiya Rossiiskoi Akademii Nauk. Seriya Fizicheskaya, **73**, No. 2, pp. 274–278 (in Russian) (2009)
8. BERLIZOV A.N., MALYUK I.A., SAJENIOUK A.D. *et al.* "Transuranium Elements and Fission Products in Technological Channels of Unit № 2 of Chernobyl Nuclear Power Plant"; J. of Radioanal, and Nuclear Ch. **277**, - pp. 49 – 57 (2008)
9. RUSSIAN RESEARCH CENTRE KURCHATOV INSTITUTE AND SLAVUTICH LABORATORY OF INTERNATIONAL RESEARCH AND TECHNOLOGIES, Final Report "Calculation of the Radioactivity and Radiative Characteristics of the Equipment and Elements of Reactor No. 1 of the Chernobyl Nuclear Plant after Its Final Stop", (in Russian) (1999)
10. DRESSELHAUS M.S., Ed., "Intercalation in Layered Materials", NATO Series B, **148**, Plenum Press, New York (1987)
11. SKRIPKIN V.V. and KOVALYUKH N.N., "Recent Developments in the Procedures Used at the SSCER Laboratory for the Routine Preparation of Lithium Carbide"; Radiocarbon,**40**, pp.211-214 (1998)