THE HISTORY AND FUTURE PLANS FOR THE WET AND DRY LONG TERM SPENT FUEL STORAGE EXPERIMENTS AT CANADIAN NUCLEAR LABORATORIES

A. BARRY
Canadian Nuclear Laboratories
Chalk River, Canada
Email: Aaron.Barry@cnl.ca

Abstract

Canadian Nuclear Laboratories (CNL) in Chalk River, Canada has two long term storage experiments for spent nuclear fuel: wet storage and dry storage. The objective of both experiments is to determine the length of time spent fuel can be safely stored in specific environmental conditions and to characterize the condition of the fuel as a function of time via periodic examinations. Both enduring experiments were initiated in the 1970's and have stored fuel in wet and dry conditions in excess of 50 years and 40 years, respectively. The paper discusses the history of CNL's long term storage experiments, a summary of previous results, and preliminary plans for continued examinations commencing in 2019.

1. INTRODUCTION

When irradiated fuel bundles are discharged from reactors in Canada, they are stored in spent fuel bays filled with water. Water provides cooling to the fuel, shielding from its radiation, and visibility for fuel handling operations. After 7 to 10 years of decay time, spent fuel is normally transferred to dry storage in concrete-based structures where it is passively cooled by air. All spent fuel in Canada is currently in either wet or dry storage [1].

Canada's plan for the long term management of its spent fuel is called Adaptive Phase Management and is the responsibility of the Nuclear Waste Management Organization (NWMO), a not-for-profit organization created via an act of the Government of Canada and funded by the nuclear fuel waste generators [1] [1]. NWMO's plan is to store the spent fuel in a deep geological repository (DGR). Consideration for siting was voluntary and began in 2010. As of 2017, 5 communities were remaining in the siting process with a single preferred site to be selected by 2023. Operations are expected to begin between 2040 and 2045 [2] [2]. With this projected timeline for an available DGR, Canada's spent fuel must continue to be stored either wet or dry. Some spent fuel will need to be stored in excess of 75 years, and possibly in excess of 100 years. The condition of spent fuel in storage will be important to its continued safe storage, its transportation from its current location to a DGR site, and handling during preparation for placement in a DGR (e.g., encapsulation).

To evaluate how the condition of spent fuel changes over time in storage, Canadian Nuclear Laboratories (CNL, formerly Atomic Energy of Canada Limited (AECL)) initiated two storage experiments in the 1970's, one for wet storage and one for dry storage conditions. The objective of both experiments is to determine the length of time spent nuclear fuel can be safely stored in specific environmental conditions. Fuel was examined and characterized to form a baseline for comparison. Interim examinations characterized the condition of the fuel as a function of time. The paper describes these examinations, including results, and future plans for both storage experiments.

2. CANDU FUEL

Most of Canada's spent fuel is of the CANDU fuel design. Although there are several different designs, they all share some common characteristics. The fuel is composed of high density UO2 pellets of natural enrichment. Fuel pellets are encased in a thin (0.4 mm) Zircaloy fuel sheath with end caps welded on each end to form a fuel element. Fuel elements are arranged in concentric rings and welded to end plates at each end to form fuel bundles. Spacer pads and bearing pads are brazed onto the fuel sheaths to space the elements from one another and to space the bundle from the pressure tube in-core, respectively. Some older designs include a welded wire wrapped around each element to fulfil both these functions. Figure 1 is an example of a CANDU fuel bundle. A typical bundle is ~50 cm long and ~10 cm in diameter. The bulk of Canada's spent fuel is of the 37 or 28

element design, although other designs exist. A 37-element bundle is operated at a maximum element linear power of 57 kW/m and an average discharge bundle burnup of 196 MWh/kgU (~8 GWd/tU) [3].

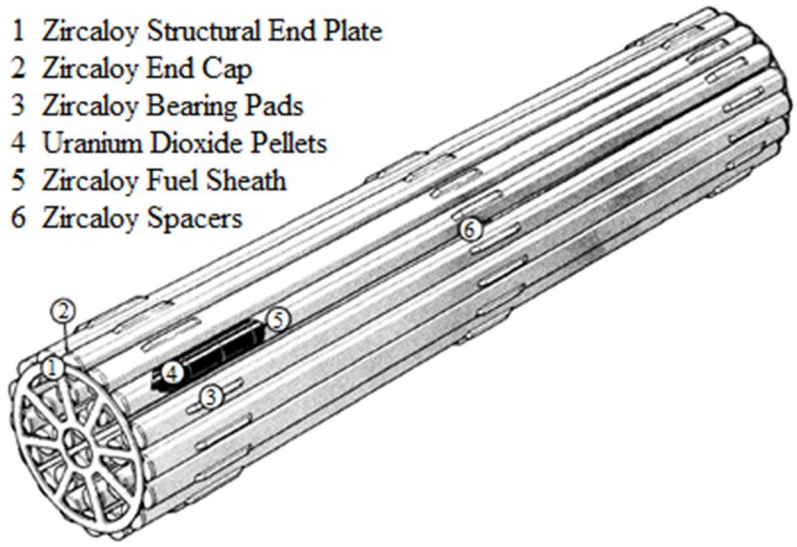

FIG. 1. Example CANDU Fuel Bundle [3].

3. WET STORAGE EXPERIMENT

CNL's long term wet storage experiment (WSE) was initiated in 1977 to evaluate the effects of wet storage on spent fuel. The WSE was to investigate three potential types of interactions: 1) corrosion of the outside of the sheath, including the effects of water chemistry and galvanic effects, 2) interaction of the inside of the sheath with the UO2 fuel and fission products, and 3) interaction of the UO2 fuel and fission products with the storage water in the case of defected fuel.

Between 1978 and 1981, spent fuel that had been in wet storage since discharge was gathered for exclusive use in the WSE. Spent fuel was selected for the following reasons:
It had been stored underwater for long periods of time (some in excess of 15 years at the time).

(a) Post-Irradiation Examination (PIE) had been completed on some fuel bundles prior to the start of the WSE, creating a baseline for comparison.
(b) It represented the major variables of CANDU nuclear fuel at that time (linear power, burnup, storage can material, bundle design, *etc.*).

In total, 176 fuel elements from 19 fuel bundles, including some intentionally defected elements, were originally selected for the WSE, including prototype power reactor fuel irradiated in the National Research Universal (NRU) experimental loops, and power reactor fuel irradiated in the Nuclear Power Demonstration (NPD), Douglas Point (DP), and Pickering reactors. The fuel was disassembled by cutting the end plates of the bundles. Individual elements were placed in stainless steel storage tubes and 8 tubes were then loaded into either aluminium or stainless steel storage cans. Figure 2 shows an example of a storage tube and storage can. The first interim storage examination of the WSE fuel (WSE-ISE1) was completed between 1978 and 1981 [4] [5], following which the fuel was stored in either the NPD or National Research Experimental (NRX) reactor spent fuel bays. Between 1988 and 1990, the second interim storage examination (WSE-ISE2) was completed [6]. In 1987, NPD was permanently shutdown, followed by the permanent shutdown of NRX in 1993. By the end of 1995, all the WSE fuel was in storage in the NRU spent fuel bays. In 1994, an additional 34 fuel elements from 5 power reactor fuel bundles irradiated in the Bruce reactors were examined and characterized to establish a baseline and added to the WSE as they had achieved burnups higher than the existing fuel. The third interim storage examination (WSE-ISE3) was started in 2016 and has included only non-destructive examinations to date. Table 1 shows the range of characteristics of the WSE fuel. The oldest fuel was discharged from NPD in May of 1962.

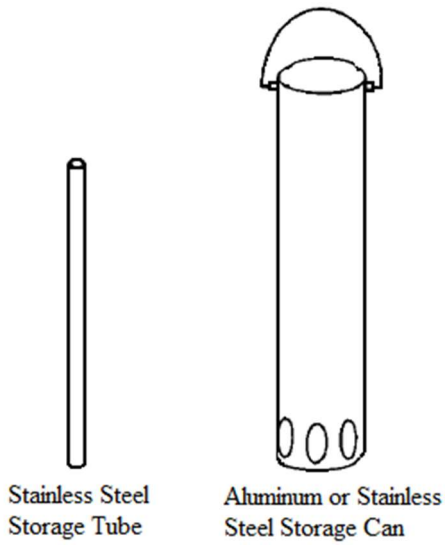

FIG. 2. Example Storage Tube and Storage Can [3] [3].

TABLE 1. CHARACTERISTICS OF THE WSE FUEL

Characteristic	Value(s) or Range
discharge date	1962 May – 1988 June
wet storage as of 2019	30-56 years
# of different bundles	24
average burnup	0*-536 MWh/kgU
# of full power irradiation days	0*-1629
condition	intact, intentionally defected post-discharge, defected in-core
fuel type	UO_2
U-235 enrichment	depleted, natural, up to 1.25%
spacer pad type	split spacer, wire wrapped
element outer diameter	13-20 mm

* Resided in channel during reactor commissioning, therefore burnup is negligible.

A summary of PIE tests completed on the WSE fuel, test purposes, and test results is shown in Table 2. In general, the fuel was in good condition, demonstrating fuel can be safely stored in water for extended periods. The most significant finding was white deposits observed on all the fuel examined during WSE-ISE3. The deposit was observed to be heavier or thicker on the ends of the elements protruding from the storage tubes as shown in Fig. 3. The deposit was easily removed with a cloth and water to reveal the sheath in good condition underneath as shown in Fig. 4. In WSE-ISE2, fuel stored in the NPD spent fuel bays up to 27 years exhibited no such white deposits and was in excellent condition and fuel stored in the NRX spent fuel bays exhibited the same white deposits observed later on all fuel in WSE-ISE3. The white deposits are believed to be caused by operations specific to research reactor spent fuel bays (e.g., NRX and NRU) that are not routinely performed in power reactor spent fuel bays (e.g., NPD) or may originate from the diatomaceous earth filtration systems of the research reactor spent fuel bays, rather than corrosion from the storage water or galvanic effects from the storage tubes and cans. Energy dispersive X-ray analyses performed during WSE-ISE2 indicated the major components of the white deposit included silicon, aluminium, iron, and calcium with traces of nickel, copper, and uranium. In addition to the white deposits, some fuel oxidation was observed in intentionally defected elements, likely UO3. X-ray diffraction results indicate oxidation is likely limited to the outer most fuel grains and the bulk of the fuel remains unoxidized.

TABLE 2. PIE RESULTS SUMMARY OF THE WSE

PIE Test	Test Purpose	Last Completed	Last Completed Test Result
Visual examination	Characterize the condition of the outside of the sheath.	WSE-ISE3	White deposit was observed on all element sheaths that was easily removed. The sheath was in good condition underneath.
Neutron radiography	Confirm if an element is intact or defected.	WSE-ISE2	No elements determined to be defected that were determined intact pre-storage.
Element profilometry	Measure element diameter and calculate residual sheath strains.	WSE-ISE3	No significant change in element diameter or sheath strain due to storage.
Axial gamma scanning	Measure the axial distribution of gamma emitting fission products.	WSE-ISE3	No fission product migration due to storage. No significant loss of UO_2 in defected element.
Fission gas measurement	Measure quantity of fission gas in the fuel-to-sheath gap.	WSE-ISE2	No additional release of fission gas from fuel matrix to gap or escape of fission gases from sheath since discharge.
Tensile test	Measure tensile strength of a sheath sample.	WSE-ISE2	No change in sheath tensile strength due to storage.
Metallographic and ceramographic examination	Characterize condition of a sheath and fuel sample. Measure outside sheath oxide thickness in a sample.	WSE-ISE2	No incipient cracks observed on inside of sheath. No apparent hydrogen buildup or migration observed. No growth in outer sheath oxide thickness due to storage.
Hydrogen and deuterium analysis	Measure concentration of hydrogen and deuterium in a sheath sample.	WSE-ISE2	No change in concentration of hydrogen or deuterium in sheath due to storage.
X-ray photoelectron microscopy	Chemical characterization of the outer most surface in a sample.	WSE-ISE2	UO_3 detected on the outer most surface of fuel at the defect site of an intentionally defected element.
Scanning electron microscopy/ wavelength dispersive X-ray	High magnification visual examination and elemental composition of outer most surface in a sample.	WSE-ISE2	Crystal growth (likely UO_3 hydrates) detected on the outer most fuel grains of an intentionally defected element.
X-ray diffraction	Chemical characterization of bulk fuel particles in a sample.	WSE-ISE2	No bulk fuel oxidation detected.
Iodine or caesium-cadmium stress corrosion cracking tests	Initial cracks are introduced in a sample, measure the crack growth as a function of stress intensity and temperature.	WSE-ISE1	Cracks are not expected to initiate and existing cracks not to propagate from stress corrosion cracking at storage temperatures below 373 K.

FIG. 3. Example of White Deposit Observed During Visual Examinations in WSE-ISE3.

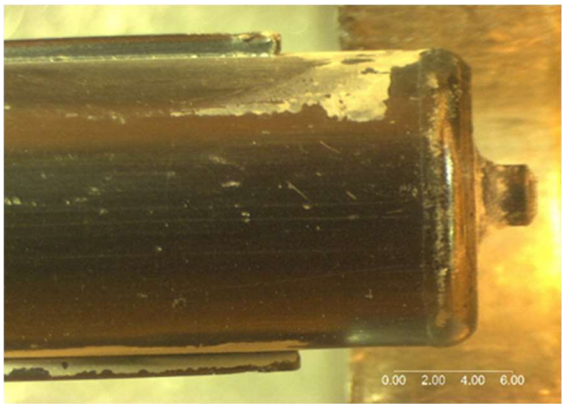

FIG. 4. NPD Fuel After ~52 Years of Wet Storage (White Deposit Removed).

The original aim of the WSE was to demonstrate that fuel can be stored wet up to 50 years. Empirical evidence from WSE-ISE3 demonstrates this storage time is achievable and that it may be possible to store fuel wet for even longer periods. To evaluate the length of time fuel can be safely stored wet, WSE-ISE3 is planned to be extended further from 2019 to 2022, including destructive examinations. A PIE workscope is being developed, but specific PIE tests are not yet selected. PIE tests under considerations include:

(a) Tests last completed in WSE-ISE2 (see Table 2) to further the timescale and dataset including fission gas measurements, tensile tests, metallographic examination, hydrogen and deuterium analysis, and appropriate chemical analyses (*e.g.*, for deposit and/or fuel oxidation investigation).
(b) Nuclide inventory measurements for DGR decay heat modelling validation.
(c) Mechanical tests applicable to transportation safety (*e.g.*, bend tests, pinch tests, impact tests, *etc*.).

4. DRY STORAGE EXPERIMENT

CNL began a concrete canister demonstration project in 1974 and dry storage of spent fuel was first demonstrated in 1975. Several concrete canister designs exist, but they all share some common characteristics. Fuel is loaded into steel baskets, seal-welded closed, and purged to provide the first barrier to radiological release. The baskets are stacked in steel lined and steel reinforced concrete canisters. Once the canister is fully loaded, the steel liner is seal-welded closed providing the second barrier to release. Sampling lines penetrate the liner to monitor for moisture and radiation. Moisture indicates a leak in the liner and radiation above background indicates a breach in a basket containing defected fuel [7]. An example image of a concrete canister is shown in Fig. 5. Dry storage systems of designs other than concrete canisters are also employed in Canada.

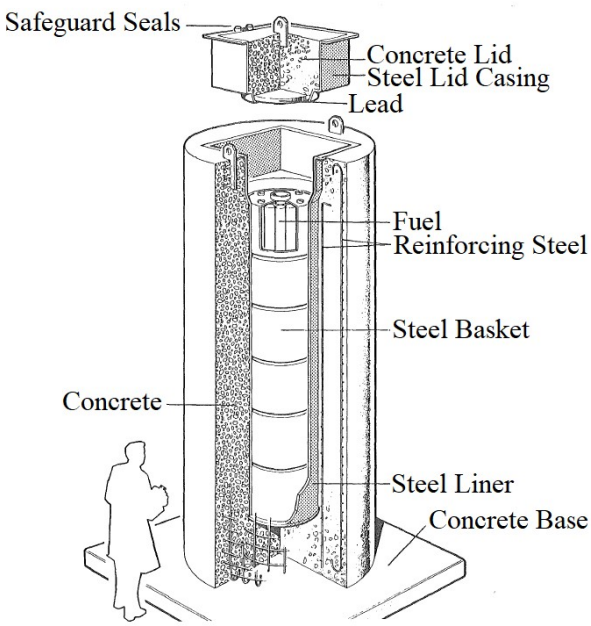

FIG. 5. Example Concrete Canister Dry Storage System [7].

CNL's long term dry storage experiment (DSE) was initiated in 1978 to evaluate the effects of dry storage on spent fuel. Three experiments were created, each with a different dry storage environment and a dedicated basket specially designed so the fuel could be retrieved for interim examinations.

The easily retrievable basket (ERB) contained 15 bundles in air at seasonally varying temperatures. The fuel was characterized pre-storage and loaded in 1978 [8] [9]. The fuel included 2 power reactor fuel bundles irradiated in the Pickering reactors, and 10 UO2 and 3 Uranium carbide (UC) driver fuel bundles from the WR-1 research reactor [10]. Further fuel characteristics are shown in Table 3. The first interim storage examination of the ERB experiment (ERB-ISE1) was completed in 1982 after 44 months of storage with temperatures ranging from -4 to 55 oC [9].

The controlled environment experiment [11] was comprised of two phases. The phase 1 (CEX-1) basket stored fuel in dry air at 150 oC and the phase 2 (CEX-2) basket stored fuel in moisture-saturated air at 150 oC. The temperature in each basket was maintained by electric heaters. The 8 fuel bundles in each basket were similar and included power reactor fuel bundles irradiated in the Pickering and Bruce reactors (4 bundles from each reactor site in each basket), with two of each bundle type being intentionally defected post-discharge. Further fuel characteristics are shown in Table 3.

The CEX-1 fuel was characterized pre-storage and loaded in 1980 [8] [9]. The first interim storage examination of CEX-1 (CEX-1-ISE1) was completed in 1984 after 41 months of storage [9] [12] [13], followed by the second (CEX-1-ISE2) in 1989 after 99.5 months of storage [14] [14]. In 1989, the experiment was changed to "unlimited air" by opening a fitting on the basket to expose it to the entire volume of air inside the concrete canister steel liner. The third examination (CEX-1-ISE3) was completed in 1993 after 140 months of storage, the last ~40 months being in unlimited air [15].

The CEX-2 fuel was characterized pre-storage and loaded in 1981 [8] [9] [8] [9]. The first interim storage examination of CEX-2 (CEX-2-ISE1) was completed in 1984 after 30 months of storage [9] [12] [13] [16], followed by the second (CEX-2-ISE2) in 1987-1988 after 58 and 69 months of storage [14] [17] [18] , and a third (CEX-2-ISE3) in 1990 after 93 months of storage [9] [20]. After CEX-2-ISE1, two in-core defected elements were added to the experiment [17]. In 1992, the intentionally defected fuel bundles from CEX-2 were transferred to a new basket capable of replenishing the internal atmosphere every 20 days to form an "unlimited air" moisture-saturated at 150 oC. This part of the experiment was renamed the alternate controlled environment experiment (ACX) [21]. The intact fuel from CEX-2 continued storage in the original basket as CEX-2. The first examination of ACX (ACX-ISE1) was completed in 1994 after ~9.5 years of storage, the last ~1.8 years being in unlimited air [21].

TABLE 3. CHARACTERISTICS OF THE DSE FUEL

Characteristic	ERB	CEX-1	CEX-2/ACX
storage condition	air, seasonally varying temperatures	dry air, 150 °C	moisture-saturated air, 150 °C
cooling before loading	15-34 months	2.8-6.8 years	1.5-8.8 years
dry storage as of 2019	40 years	38 years	37 years
# of different bundles	15	8	8
range of average outer element burnups	35-266 MWh/kgU	186-222 MWh/kgU	181-262 MWh/kgU
condition	intact	intact, intentionally defected post-discharge	intact, intentionally defected post-discharge, defected in-core
fuel type	UO_2, UC	UO_2	UO_2
U-235 enrichment	natural, up to 2.37%	natural	natural
sheath material	Zirc-4, Zr-2.5 Nb	Zirc-4	Zirc-4
spacer pad type	split spacer, wire wrapped	split spacer	split spacer
element outer diameter	15 mm	13-15 mm	13-15 mm

A summary of PIE tests completed on the DSE fuel and test results is shown in Table 4. Test purposes are the same as defined previously in Table 2 or have been defined beneath Table 4. In general, intact fuel was in good condition, demonstrating intact fuel can be safely stored in air for extended periods. The intentionally defected fuel degraded to some degree, as described below. The most significant findings were:

(a) Fuel oxidation was observed in intentionally defected elements in CEX-1 and CEX-2, the amount of oxidation increasing with successive ISEs. Ceramography showed unoxidized grains, partially oxidized grains with UO2 cores surrounded by a higher oxide layer, and fully oxidized grains with micro-cracking. X-ray photoelectron microscopy indicated surface oxidation of UO2 grains proceeded to U3O8 or beyond. X-ray diffraction identified predominately U4O9/U3O7 in fuel from CEX-1 defect sites (this techniques measures to ~2 μm thickness on individual grains) and trace U3O8 was identified in some

samples. U3O8 and UO3 hydrate and other higher uranium oxides were detected in trace quantities in fuel from CEX-2 defect sites. There was a correlation between oxidation and both linear power and storage time as shown in Fig. 6. An example of fuel oxidation is shown in Fig. 7.

(b) The activity of the water in the CEX-2 container used to establish moisture-saturated air was 100 to 1000 times higher than intact fuel vessels, indicating fission product leaching from the fuel. 137Cs migration towards defect sites observed in axial gamma scans is consistent with this result.

(c) The storage atmosphere decreased in O2 and increased in CO2 and H2. The presence of CO2 suggests corrosion of the basket (i.e., UO2 oxidation is not the sole cause of O2 depletion). Xe and Kr detected suggests intergranular fission gas is released with fuel oxidation during storage.

TABLE 4. PIE RESULTS SUMMARY OF THE DSE

PIE Test	Last Completed	Last Completed Test Result
Visual examination	ERB-ISE1 CEX-1-ISE3 ACX-ISE1	No anomalies or changes in sheath condition due to storage in ERB and CEX-1. CEX-2/ACX fuel sheaths had white stains, pitting, and corrosion products in some cases.
Element profilometry	ERB-ISE1 CEX-1-ISE3 ACX-ISE1	No significant change in element diameter or sheath strain due to storage. Any UO_2 oxidation was insufficient to cause measurable sheath swelling.
Fission gas measurement	ERB-ISE1 CEX-1-ISE1 CEX-2-ISE1	No baseline was previously established, but results were within the range expected shortly after discharge, suggesting no change in fission gas release due to storage.
Void volume measurement[1]	ERB-ISE1	Calculated internal gas pressure and sheath hoop stresses from internal gas pressure were determined insufficient to cause sheath failures at the storage condition temperatures.
Torque test[2]	ERB-ISE1 CEX-1-ISE3 ACX-ISE1	No change in end plate end cap weld strength due to storage in ERB and CEX-1. A decrease in force required of up to 38 % was observed in CEX-2/ACX with increasing storage time.
Tensile test	ERB-ISE1 CEX-1-ISE3 ACX-ISE1	No change in sheath tensile strength due to storage. A decrease in percent uniform elongation was observed with storage time in CEX-1 and CEX-2/ACX.
Hydrogen and deuterium analysis	ERB-ISE1 CEX-1-ISE3 ACX-ISE1	No change in concentration of hydrogen in sheath due to storage. Some migration or loss of deuterium was observed in CEX-2/ACX.
Metallographic and ceramographic examination	ERB-ISE1 CEX-1-ISE3 ACX-ISE1	Fuel oxidation was observed in defected elements with greater oxidation in successive ISEs in CEX-1 and CEX-2/ACX. Some hydrogen migration was observed in CEX-2/ACX to end cap and defect sites. No change in oxidation of intact fuel. No change in bulk sheath condition. No growth in outer sheath oxide thickness due to storage.
Axial gamma scanning	ERB-ISE1 CEX-1-ISE3 CEX-2-ISE3	No fission product migration due to storage in ERB. ^{137}Cs migration towards defect sites was observed in some CEX-1 and CEX-2/ACX elements.
X-ray photoelectron microscopy	CEX-1-ISE3 ACX-ISE1	Surface oxidation of UO_2 grains proceeded to U_3O_8 or beyond in defected elements.
X-ray diffraction	CEX-1-ISE3 ACX-ISE1	U_4O_9/U_3O_7 identified in fuel from CEX-1 defect sites (at least 2 µm thick on individual grains); trace U_3O_8 was identified in some samples. U_3O_8 and UO_3 hydrate and other higher uranium oxides were detected in trace quantities in fuel from CEX-2 defect sites.
Fourier transform infrared spectroscopy[3]	CEX-1-ISE1 CEX-2-ISE1	U_3O_8 or other bulk oxidation was not detected.
U:O ratio[4]	CEX-1-ISE1 CEX-2-ISE1	No significant bulk fuel oxidation as measured U:O ratio was in the range of intact fuel.

PIE Test	Last Completed	Last Completed Test Result
CEX-2 solution analysis[5]	ACX-ISE1	Activity in defected fuel vessels 100 to 1000 times higher than intact fuel vessels, predominately from ^{137}Cs.
Storage atmosphere analysis[6]	CEX-1-ISE3 ACX-ISE1	A decrease in O_2 and an increase in CO_2 and H_2 was observed. Xe and Kr was detected in defected element vessels.

1Measure the free void space in an element. Calculate internal gas pressure and sheath stress due to internal gas pressure.

2Measure the force required to remove end plate material from an element via rotating it circumferentially. It is a measurement of end plate end cap weld strength.

3Detect higher order oxidation phases of uranium.

4Measure the ratio of uranium to oxygen.

5Measure the uranium, 134Cs, 137Cs, 129I, 99Tc, and 90Sr radioactivity of the water in the CEX-2 container used to establish moisture-saturated air.

6Elemental compositional analysis of the storage gas within a basket.

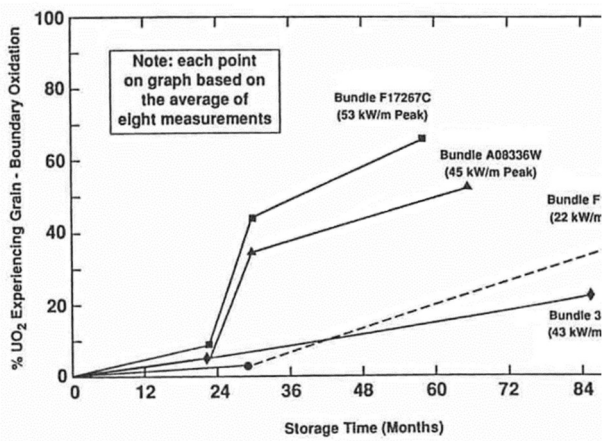

FIG. 6. Fuel Oxidation as a Function of Storage Time in Moisture-Saturated Air at 150ºC [20].

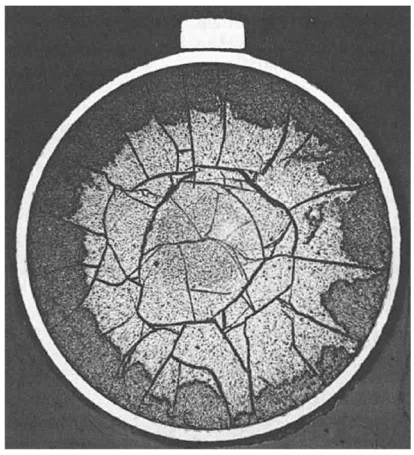

FIG. 7. Example of Fuel Oxidation After Storage in Moisture-Saturated Air at 150ºC [20].

Oxidation to U3O7/U4O9 results in a slight increase in density over UO2, but further oxidation to U3O8 results in a decrease in density, leading to up to 36% net volume increase [22]. This volume increase could potentially cause sheath failures and loss of fuel integrity. ISEs to date indicate only trace amounts of U3O8 and element profilometry showed no significant change in fuel sheath diameter, even at defect sites. Examination of the DSE fuel is planned to start in 2022 and will evaluate the effects of continued storage more than 25 years after the last ISEs. The PIE workscope is in development and will focus on the extent of further fuel oxidation (including determining the oxide forms and distribution), migration of hydrogen and mechanical properties of the sheath, storage canister atmosphere composition changes, and fission product migration in the fuel. Mechanical tests applicable to transportation safety are also being considered.

5. CONCLUSIONS

CNL has had two enduring long term fuel storage experiments since the 1970's for both wet and dry storage conditions. WSE results to date indicate spent fuel can be safely stored under water in excess of 50 years, as evidenced by a wide suite of PIE tests. Although white deposits were observed on the fuel, they were easily removable and did not affect the underlying sheath material. Additional examinations are planned for 2019-2022 to further substantiate this claim and the workscope is currently in development. PIE results of the DSE indicate intact spent fuel can be stored in dry or moisture-saturated air up to 150 oC for over 15 years; however, the same storage conditions result in oxidation of defected fuel and fission product release, but no bulk fuel oxidation to U3O8 or loss of fuel integrity. Future examinations of both intact and defected fuel are planned to evaluate the DSE fuel condition after 40 years of storage and the workscope is currently in development.

ACKNOWLEDGEMENTS

This study was funded by Atomic Energy of Canada Limited, under the auspices of the Federal Nuclear Science and Technology Program.

REFERENCES

[1] NUCLEAR WASTE MANAGEMENT ORGANIZATION, What Is Used Nuclear Fuel?, internal report, NWMO, Toronto, Canada, 2016.

[2] NUCLEAR WASTE MANAGEMENT ORGANIZATION, Implementing Adaptive Phased Management 2018 to 2022, internal report, NWMO, Toronto, Canada, 2018.

[3] PAGE, R.D., Canadian Power Reactor Fuel, internal report AECL-5609, CNL, Chalk River, Canada, 1976.

[4] HUNT, C.E.L, WOOD, J.C., BAIN, A.S., Long-Term Storage of Fuel in Water, internal report AECL-6577, CNL, Chalk River, Canada, 1979.

[5] HUNT, C.E.L, WOOD, J.C., SURETTE, B.A., FREIRE-CANOSA, J., Seventeen Years of Experience with Storage of Irradiated CANDU Fuel Under Water, internal report AECL-7928, CNL, Chalk River, Canada, 1981.

[6] WASYWICH, K.M., "Examination of used CANDU fuel following 27 years of storage under water", The Third International Conference on Nuclear Fuel Reprocessing and Waste Management, Sandai, Japan, 1991.

[7] WASYWICH, K.M., "Canadian experience with the dry storage of spent CANDU fuel", Co-ordination Research Meeting on Behaviour of Spent Fuel and Storage Facility Components During Long-Term Storage (BEFAST-II), Budapest, Hungary, 1988.

[8] WASYWICH, K.M., CHEN, J.D., BURNS, K.I., BOASE, D.G, "The characterization of irradiated CANDU fuel bundles stored in concrete canisters at WNRE", The International Conference on Radioactive Waste Management, Winnipeg, Canada, 1982.

[9] WASYWICH, K.M., CHEN, J.D., FROST, C.R., FREIRE-CANOSA, J., "Long-term behavior of irradiated CANDU fuel in concrete canister storage – test results", International Workshop on Irradiated Fuel Storage: Operating Experience and Development Programs, Toronto, Canada, 1984.

[10] OLDAKER, I.E., CROSTHWAITE, J.L., KELTIE, R.J., TRUSS, K.J., An Experiment to Examine the Mechanistic Behaviour of Irradiated CANDU Fuel Stored Under Dry Conditions, internal report AECL-6307, CNL, Chalk River, Canada, 1979.

[11] OLDAKER, I.E., The WNRE Program to Investigate the Stability of Irradiated CANDU Power-Reactor Fuel Under Dry Storage Conditions, internal report AECL-6431, CNL, Chalk River, Canada, 1979.

[12] WASYWICH, K.M., FROST, C.R., FREIRE-CANOSA, J., "Storage of irradiated CANDU fuel in dry and moist air", The Second International Conference on Radioactive Waste Management, Winnipeg, Canada, 1986.

[13] WASYWICH, K.M., FROST, C.R., "Current status of the Canadian experimental dry storage program for irradiated fuel", The International Conference on CANDU Fuel, Chalk River, Canada, 1986.

[14] WASYWICH, K.M., HOCKING, W.H., SHOESMITH, D.W., TAYLOR, P., Differences in oxidation behavior of used CANDU fuel during prolonged storage in moisture-saturated air and dry air at 150oC, Nucl. Technol. 104 3 (1993) 309-329.

[15] HOCKING, W.H., BEHNKE, R., DUCLOS, A.M., GERWING, A.F., WASYWICH, K.M., "Grain-boundary oxidation of used CANDU fuel exposed to dry air at 150oC for a prolonged period", The Fourth International Conference on CANDU Fuel, Pembroke, Canada, 1995.

[16] WASYWICH, K.M., CHEN, J.D., FREIRE-CANOSA, J., NAQVI, S.J., "Examination of intact and defected irradiated CANDU fuel bundles stored up to ~30 months in moist air at 150oC", The Third International Spent Fuel Storage Technology Symposium/Workshop, Seattle, USA, 1986.

[17] WASYWICH, K.M., FROST, C.R., "Update on the Canadian experimental program to evaluate used-fuel integrity under dry-storage conditions", The Second International Conference on CANDU Fuel, Pembroke, Canada, 1989.

[18] HOCKING, W.H., GERWING, A.F., WASYWICH, K.M., FROST, C.R., "X-ray photoelectron spectroscopy on used CANDU UO2 fuel exposed to warm moist-air conditions", The Second International Conference on CANDU Fuel, Pembroke, Canada, 1989.

[19] WASYWICH, K.M., HOCKING, W.H., DUCLOS, A.M., RANDELL, D.R., BEHNKE, R., FROST, C.R., "Oxidation behavior of used CANDU fuel stored in moisture-saturated air at 150oC", The Third International Conference on CANDU Fuel, Chalk River, Canada, 1992.

[20] WASYWICH, K.M., FROST, C.R., "Behavior of used CANDU fuel stored in 150oC moisture-saturated air", The Third International Conference on High Level Radioactive Waste Management, Las Vegas, USA, 1992.

[21] TAYLOR, P., McEACHERN, R.J., SUNDER, S., WASYWICH, K.M., MILLER, N.H., WOOD, D.D., Recent Findings on the Oxidation of UO2 Fuel Under Nominally Dry Storage Conditions, internal report AECL-11447, CNL, Chalk River, Canada, 1995.

[22] McEACHERN, R.J., TAYLOR, P., A Review of the Oxidation of Uranium Dioxide at Temperatures Below 400oC, internal report AECL-11335, CNL, Chalk River, Canada, 1997.