A NEW APPROACH TO NUCLEAR FUEL RECYCLING FOR LWR
REMIX-fuel concept: Status and trends

N.V. KOVALEV, N.D. GOLETSKIY, B.YA. ZILBERMAN, A.B. SINYUKHIN
JSC "Khlopin Radium Institute" (KRI)
St-Petersburg, Russian Federation
Email: kovalev@khlopin.ru

Abstract

The paper contents one of the approach to spent fuel (SF) recycling with multi-recycling entire amount of the U and Pu after the reprocessing. The description of the main concepts of U-Pu fuel which developing in Russia is given. The status and future plans for REMIX-concept program development is described in the paper.

1. REMIX-FUEL

Spent fuel reprocessing and recycling is a proper way to use the energy potential of SNF. As a result of recycling of nuclear materials, about 30% of natural uranium is saved, and eliminating SNF accumulation. JSC "Khlopin Radium Institute" (KRI) in cooperation with NRC «Kurchatov institute» has been developing the scientific aspect of the concept of REMIX fuel (Regenerated Mixture of U-Pu oxides) [1-7]. REMIX fuel contains a mixture of enriched natural uranium with repU and plutonium from reprocessed spent nuclear fuel. When using REMIX, 100% loading of the PWR core with mixed fuel is assumed.

Several options of the REMIX technology are considered:

- REMIX-A - basic option. Separated (not necessarily completely) regenerated U and Pu from spent fuel are re-mixed in the original ratio with enriched uranium feed. Multi-recycling is possible during the whole operation period of a reactor facility (up to 7 recycles).
- REMIX-C option assumes re-enrichment of regenerated uranium up to 5% 235U. Then it is mixed with plutonium-uranium mixture after reprocessing with enriched (up to 4-5% 235U) natural uranium feed. Multi-recycling (up to 7 recycles) is possible during the whole operation period of a reactor facility too.
- REMIX-B option assumes recycling without natural enriched uranium feed, respectively it is necessary to provide the re-enrichment of regenerated uranium. As a result, the total amount of nuclear materials is reduced. Plutonium content in the fuel can reach more than 4%.
- REMIX-HET option assumes using a heterogeneous assembly, which includes fuel pins with mixed U-Pu fuel and repU fuel.
- REMIX-E option assumes fabrication of mixed fuel using plutonium in high concentration ~5% together with enriched natural uranium. Regenerated U is supposed to be enriched and used separately in repU fuel. Cross-recycling of nuclear materials is possible.
- Recycling of regenerated materials can reduce the final accumulated amount of SNF about 4-10 times compared to the open fuel cycle. Natural uranium savings of 25-30% are also achieved.

The optimal recycling option depends on the required NFC option. For example, for country, which is going to continue or expanding nuclear power, REMIX-A/C option can be considered as an optimal for all period of operation. For a country with phasing out of nuclear power, it is more efficient to recycle nuclear materials with "compression"– option REMIX-B/E.

2. REMIX: THE CURRENT STATUS OF THE WORK

In terms of the development of the REMIX concept, Figure 1 shows a schedule of the REMIX concept implementation.

The experimental batch of uranium with 20% plutonium mixture was mastering in JSC "Khlopin Radium Institute", with total mass about 3.3 kg. The mixture was sent to JSC "VNIINM", where after mixing it with repU and enriched natU, pellets were fabricated, after that REMIX fuel rods and experimental fuel assemblies

were fabricated at Siberian Chemical Combine, for irradiation in the VVER-1000 reactor (Balakovo NPP), as well as in the research reactor “MIR”. The irradiation started in 2016. No deviations in the operation has detected. The supervisor issued a license for reloading.

The plans of State Corporation of Rosatom for REMIX conception development involves necessary infrastructure construction for REMIX fuel fabrication. Russia supposed to create integrated plant for SNF reprocessing and recycling. State Corporation Rosatom approved a program for referencing REMIX fuel. The Program includes calculation and experimental demonstration of the REMIX fuel safety, fabrication and irradiation 6 full-size fuel assemblies with REMIX fuel, as well as the developing and construction semi-industrial REMIX fuel fabrication facility.

The program “Calculation and Experimental demonstration of the REMIX fuel safety for the VVER-1000/1200” is carried out for the development of codes for safety analysis, licensing and providing the possibility of operation of six experimental REMIX-FAs in a core of the operating VVER-1000/1200. To create the technology and pilot production of REMIX fuel, work has begun on the creation of the document "Justification of investments in pilot production of REMIX fuel".

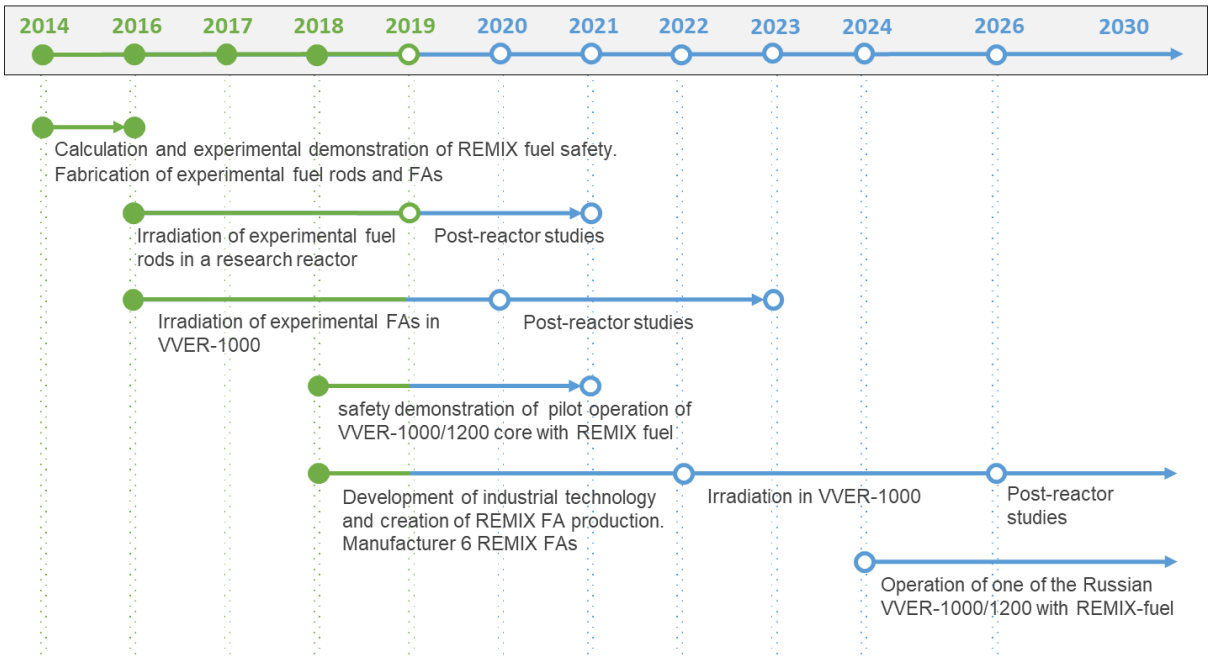

FIG. 1. The schedule of the REMIX concept implementation.

3. TESTS IN THE RESEARCH REACTOR “MIR”

For irradiation and post-reactor studies (PRS) in the research reactor “MIR” 10 fuel rods with REMIX were fabricated and irradiation started in 2016. Experimental fuel rods have the following features:

- unification with a fuel rod based on FA-2M for irradiation in the core of a VVER-1000 reactor;
- the shortened execution of a fuel rod ~ 600mm allows to irradiate it in the “MIR” reactor core with the maximum uniformity of energy release in height;
- REMIX fuel pellets are used as fuel, similar to those delivered for irradiation to the core of a VVER-1000 reactor;
- the presence of a gas collector allows to investigate the gas emission from REMIX-fuel.

Tests of 10 experimental fuel rods with REMIX fuel include:

- base irradiation of fuel rods in the research reactor “MIR” up to burnout ~ 50 MW·day/kgHM;
- for fuel rods No.5–9 - special experiments: power surges, design basis accident conditions with loss of coolant (LOCA) and input to the active zone of positive reactivity (RIA);
- post-irradiation studies.

Figure 2 shows the diagram of the tests of 10 experimental fuel rods with REMIX fuel.

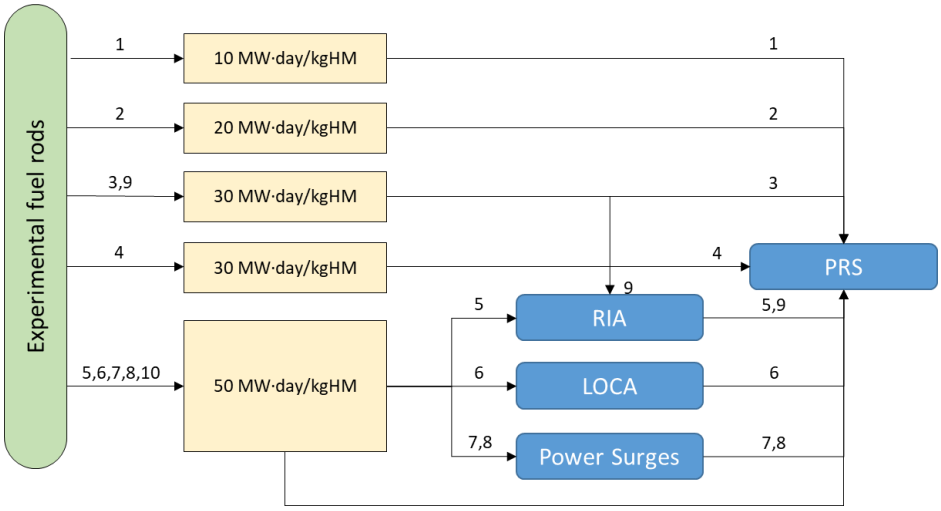

FIG. 2. Tests of 10 experimental fuel rods with REMIX fuel

The research program provides the extraction by one fuel rod during irradiation testing at certain values of burnup for studies of the efficiency characteristics. From the presented diagram it can be seen that as a result of the implementation of this program, an array of experimental data for validating computer codes and estimating software calculation errors in average burnup ranges from 0 to 50 MW·day/kgHM will be obtained. The behavior of REMIX fuel in the modes of normal operation, violations of normal operation and in design basis accidents will also be studied.

The results of studies (inspection, profilometry, measurement of the yield of gaseous fission products (GFP), X-ray and gamma-scan) of the extracted 4 fuel rods indicate the absence of any significant anomalies. When inspecting the fuel rod, no features of its state were detected as compared with the state of standard VVER fuel rods with similar burnup.

- the appearance of a fuel rod, including the state of welded joints - without anomalies;
- the reduction of the clad diameter due to radiation-thermal creep is about 10–20 microns, which corresponds to the burnup of the fuel;
- no significant elongation of the fuel rod is not registered;
- fuel rod remained tight, the yield of GFP under the shell was 1.38%;
- the distribution of fission products along the length of the pin corresponds to the burnup profile.

The results of the ongoing reactor tests and studies of the first extracted fuel rods with REMIX fuel show of their efficiency and the possibility to work for a deeper burnup. The reactor tests of the remaining fuel rods continue and end in 2019.

4. REPROCESSING OF IRRADIATED REMIX FUEL

Currently, JSC “Khlopin Radium Institute” has accumulated a great experience in hydrometallurgical reprocessing of spent nuclear fuel from various research and power reactors, with the aim of developing these technologies for industrial implementation at radiochemical plants. For almost 50 years of reprocessing experience, more than 140 kg of SNF have been reprocessed with burnup up to 70 MW·day/kgHM.

Modern extraction technology for reprocessing SNF originated more than 50 years ago in the USA for reprocessing irradiated natural uranium for military purposes [8]. It was called PUREX process (PUREX = Plutonium-Uranium Extraction). In Russia, the EDC (Experimental Demonstration Center) technology at the Mining Chemical Combine (MCC) plant incorporates the improvement of technological processes for effluent release elimination [9]. This technology was developed at JSC “Khlopin Radium Institute”.

After the reactor campaign in the research reactor “MIR” and Balakovo NPP, experimental reprocessing of irradiated REMIX fuel roads is planned to demonstrate the possibility of recycling such fuel.

5. CONCLUSIONS

The transition period before starting two-component nuclear energy system may include recycling the reprocessed nuclear materials from LWRs (like VVERs) SNF. Several options of the REMIX technology are considered. Because of SNF reprocessing and recycling of regenerated materials in REMIX fuel, it is possible to reduce the final accumulated amount of SNF about 4-10 times (depending of the REMIX type) compared to an open fuel cycle. Natural uranium saving of 25–30% can be achieved.

In terms of the development of the REMIX concept, at present, experimental FAs (for NPP with VVER-1000 type) and fuel rods (for RR MIR) with REMIX fuel have been fabricated and their irradiation is in the process. The irradiation and PRS program for 10 REMIX fuel rods in the research reactor “MIR” is carried out. The results of PRS (inspection, profilometry, measurement of the yield of gaseous fission products (GFP), X-ray and gamma-scan) of the extracted fuel rods indicate the absence of any significant anomalies.

After the irradiation, experimental reprocessing of irradiated REMIX fuel rods is proposed to demonstrate the possibility of recycling such fuel.

REFERENCES

[1] FEDOROV, YU., BIBICHEV, B., et al., Use of regenerated uranium and plutonium in thermal reactors, Atomic Energy, **99** 2 (2005) 136–141.

[2] PAVLOVICHEV, A., FEDOROV, YU., et al., Neutron-physical characteristics of the VVER-1000 core with 100% fuel loading from regenerated uranium and plutonium, Atomic Energy, **101** 6 (2006) 407–413.

[3] PAVLOVICHEV, A., PAVLOV, V., SEMCHENKOV, YU., et al., Neutron-physical characteristics of VVER-1000 reactor core with 100% fuel loading from a mixture of regenerated uranium, plutonium and enriched uranium, Atomic energy, **104** 4 (2008) 196–198.

[4] ZILBERMAN, B., FEDOROV, YU., RIMSKY-KORSAKOV, A., et al., The possibility of using fuel from a mixture of enriched regenerated uranium and regenerated plutonium for 100% load of the VVER-1000 core, Atomic energy, **113** 6 (2012) 307–314.

[5] FEDOROV, YU., BARYSHNIKOV, M., BIBICHEV, B., et al., “Multiple recycle of REMIX-fuel based on reprocessed uranium and plutonium mixture in thermal reactors”, GLOBAL 2013: International Nuclear Fuel Cycle Conference, Salt Lake City (2013).

[6] BOBROV E.A., ALEKSEEV P.N., TEPLOV P.S., et al., Economical aspects of multiple plutonium and uranium recycling in VVER reactors, Kerntechnik **81** 4 (2016).

[7] FEDOROV, YU., ZILBERMAN, B., GOLETSKIY, N., et al., Peculiarities of highly burned-up NPP SNF reprocessing and new approach to simulation of solvent extraction processes. GLOBAL 2013: International Nuclear Fuel Cycle Conference, Salt Lake City (2013).

[8] FRANK N. von HIPPEL, Managing Spent Fuel in the United States: The Illogic of Reprocessing, IPFM Research Report No.3 (2007).

[9] MASLENNIKOV I., FEDOROV YU., SHADRIN A., et al., Experimental Demonstration Center MCC: tasks, technologies, prospects (2012);
http://www.atomic-energy.ru/technology/33473