RESEARCH AND DEVELOPMENT ON PARTITIONING AND TRANSMUTATION TECHNOLOGY BASED ON DOUBLE-STRATA CONCEPT IN JAEA

K. TSUJIMOTO, H. HAYASHI, F. MAEKAWA, T. MATSUMURA, S. MEIGO, K. NISHIHARA, T. SASA, M. TAKANO
Japan Atomic Energy Agency
Tokai, Japan
Email: tsujimoto.kazufumi@jaea.go.jp

Abstract

Partitioning and Transmutation technology is expected to be effective to mitigate the burden of the high-level waste (HLW) disposal by reducing the radiological toxicity and heat generation. Based on the Strategic Energy Plan of Japan, research and development (R&D) on P&T are being accelerated in Japan. The Japan Atomic Energy Agency (JAEA) has been continuously implementing R&D on P&T technology. The R&D on P&T in JAEA are basing on two kinds of concepts: one is the homogeneous recycling of minor actinide (MA) in fast reactors and the other is the dedicated MA transmutation, so-called "double-strata" strategy, using an accelerator-driven system (ADS). The ADS proposed by JAEA is a lead-bismuth eutectic (LBE) cooled fast subcritical reactor with thermal output of 800 MW. Various R&D activities not only for ADS but also for advanced fuel cycle are progressing in JAEA. For the partitioning process of minor actinide from spent fuel, a new separation process, SELECT process, using new innovative extractants to improve the partitioning process from the viewpoints of the economy and the reduction of secondary wastes was developed. For the MA-bearing fuel for ADS and its fuel cycle are also being developed. Uranium-free nitride fuel was chosen as the first candidate for ADS. A pyrochemical process has been proposed as the first candidate for reprocessing of the spent nitride fuel. In this paper, recent R&D activities based on these policies are briefly shown.

1. INTRODUCTION

The Government of Japan periodically formulates the Basic Energy Plan, called the Strategic Energy Plan, in accordance with an article in the Basic Act on Energy Policy that entered into force in 2002. The 4th version of the Strategic Energy Plan was issued in April 2014 [1]. This was the first one after the accident of the Fukushima Daiichi Nuclear Power Plant. In spite of the accident, the Plan defines the nuclear power as an important base-load power source as a low carbon and quasi-domestic energy source, contributing to stability of energy supply-demand structure, on major premise of ensuring of its safety. The Plan said that the basic policy of Japan is to promote a nuclear fuel cycle that reprocesses spent fuels and effectively utilizes the plutonium retrieved, from the viewpoint of effective utilization of resources and reduction of the volume and harmfulness of high-level radioactive waste. The Plan puts emphasis on the importance of activities to resolve the challenge of how to manage and dispose of spent fuel, as well as the Fukushima restoration, safety operation of nuclear plants, and public acceptance. The Japanese government commits itself to searching for measures to address spent fuel management and storage. In particular, the government will promote the search for geologic disposal of high-level radioactive waste that ensures both reversibility and retrievability in the case of future technological disposal advancements. The government also will undertake construction and utilization of intermediate storage facilities and dry cask storage and promote research and development on methods for volume reduction and radioactivity mitigation for spent fuel. At the same time, the government will promote technology development on volume reduction and mitigation of degree of harmfulness of radioactive waste, as for the Partitioning and Transmutation (P&T) technology. Specifically, development of technologies for decreasing the radiation dose remaining in radioactive waste over a long period of time and enhancing the safety of processing and disposal of radioactive waste, including nuclear transmutation technology using fast reactors and accelerators, will be promoted by utilizing global networks for cooperation. The latest 5th version of the Strategic Energy Plan was issued in July 2018 [2]. The promotion of Research and Development (R&D) for P&T technology did not change in the latest Plan.

Based on this Strategic Energy Plan, R&D on P&T have been being accelerated in Japan. The Japan Atomic Energy Agency (JAEA) has been continuously implementing R&D on P&T technology to reduce the

burden of the backend of the nuclear fuel cycle. The R&D on P&T in JAEA are basing on two kinds of concepts: one is the homogeneous recycling of minor actinide (MA) in fast reactors and the other is the dedicated MA transmutation, so-called “double-strata” strategy, using an accelerator-driven system (ADS). As for the double-strata option, JAEA has continuously conducted the various fields of R&D on the aqueous separation of MAs and FPs for the spent fuel of the first stratum, design study and basic data acquisition for ADS, fabrication and pyrochemical process for dedicated ADS fuel, and so on. This paper overviews the recent progress and future R&D plan of the study on P&T technology based on double-strata concept in JAEA.

2. OBEJCTIVE AND ROLE OF PARTITIONING AND TRANSMUTATION TECHNOLOGY

In Japan, about 18,000 tons of spent fuels are currently stored. As spent fuels are sure to be produced through the use of nuclear energy, it is essential to implement measures to resolve this challenge as a responsibility of the current generation so that the burden is not passed on to future generations. The geological disposal of high-level radioactive waste is currently the most promising method not dependent on long-term institutional management to minimize the burden on future generations. The Japanese government decided the Basic Policy on the Final Disposal of Designated Radioactive Wastes (Cabinet Decision in May 2015) and take leadership to find proper solutions for the final disposal of high-level radioactive waste. Pursuant to the Basic Policy on the Final Disposal of Designated Radioactive Wastes, following a meeting of the Inter-Ministerial Council for the Final Disposal of High-Level Radioactive Waste, the government released the “Map of Scientific Characteristics” concerning the final disposal of high-level radioactive waste. The government will reinforce its efforts to increase the capacity of storing spent fuels, as safely managing spent fuels until their final disposal is an important process of the nuclear fuel cycle. Furthermore, the government will promote development of technologies for reducing the volume and harmfulness of radioactive waste in order to secure a wide range of options in the future.

The P&T technology is a radioactive waste management concept to separate elements and radioactive nuclides from high-level radioactive waste (HLW) depending on their half-lives and recycling purposes, and to transmute long-lived radioactive nuclides to short-lived or stable ones in order to reduce the burden of the radioactive waste disposal and utilize radioactive waste as useful resources. The P&T has been pointed out in numerous studies as the strategy that can relax constraints on geological disposal, e.g. by reducing the waste radiotoxicity and the footprint of the underground facility. In Japan, research and development (R&D) on the partitioning and transmutation (P&T) technology has been energetically promoted under the OMEGA program since 1988 [3]. The Atomic Energy Commission (AEC) of Japan held two check and reviews (C&Rs) so far: one was from 1999 to 2000 [4], and the other was from 2008 to 2009 [5]. For the latest C&R, the AEC of Japan set up the subcommittee of P&T Technology under the Advisory Committee on Research and Development. The subcommittee reviewed the study for the impact of P&T on HLW disposal by JAEA. In this study, potential hazard, effective dose rate of HLW, amount of waste form and repository area were investigated for four different scenario: 1) reference non-P&T, 2) transmutation process only (separation and transmutation of MA), 3) partitioning process only (separation of some FP), and 4) both partitioning and transmutation. The subcommittee analyzed the results of the study and concluded that the significances of the P&T technologies were as follows:

1. Reduction of the potential toxicity.

   Implementation of P&T technologies will reduce the long-term potential toxicity of the HLW, keeping in mind that degree of reducing the potential toxicity depends on the mixture ratio of MAs.

2. Reduction of the requirement for the geological repository.

   The MAs by the implementation of P-T technologies will increase time that is necessary to set up new disposal field, or reduce the burden of managing waste forms.

3. Enhancement of a freedom for rational design of nuclear waste disposal systems.

   Partitioning technologies of heat-generating fission product and transmutation technologies of MA have possibility to improve the design of nuclear waste disposal systems. However, further studies of storage and disposal methods for each waste are required.

In the C&R in 1999, it was recommended to facilitate R&D for two types of P&T technology in parallel, i. e., the homogeneous MA recycle by commercial fast breeder reactor (FBR) cycle and so-called Double-strata fuel cycle concept where the dedicated transmutation by accelerator driven system (ADS) is adopted.

3. OVERVIEW OF RESEARCH ACTIVITIES ON P&T BASED ON ADS IN JAEA

3.1. Overview of Research activities on Fuel Cycle Process for Minor Actinides

3.1.1. Partitioning process of Minor Actinide from high-level waste

A separation process for MAs (Am and Cm) from HLW has been developed at JAEA using new innovative extractants to improve the partitioning process from the viewpoints of the economy and the reduction of secondary wastes. The MA separation process consists of three solvent extraction steps, as shown in Fig. 1. Phosphorus-free compounds consisting of carbon, hydrogen, oxygen and nitrogen (CHON principle) were applied to the all separation steps. We have proposed a hydrometallurgical process called SELECT (Solvent Extraction from Liquid-waste using Extractants of CHON-type for Transmutation) to recycle nuclear materials and separate actinides for transmutation [6].

The SELECT process consists of the following steps: selective extraction of U and co-extraction of U and Pu (Step IA and IB), recovery of Am, Cm, and rare earth elements (REs) from high level waste (Step II), separation of REs from Am and Cm (Step III), and mutual separation of Am and Cm (Step IV). The extractants used in the steps IA and IB are N,N-di(2-ethylhexyl)-2,2-dimethylpropanamide (DEHDMPA), N,N-di(2-ethylhexyl)butanamide (DEHBA). At the Step II, MA and Rare Earth elements (RE) are recovered together from HLLW by solvent extraction process using N,N,N’,N’-tetradodecyldiglycolamide (TDdDGA) [7,8]. The performance of the process was verified by continuous extraction test using simulated HLLW containing MA tracers. The MAs were recovered over 99.99% from simulated HLLW. The MAs, Am and Cm, are separated from RE at the Step III by solvent extraction using new hybrid type extractant such as N, N, N’, N’, N’’, N’’-hexaoctylnitrilotriacetamide (HONTA). The potential of separation performance of the separation process using HONTA has been verified with continuous extraction test using MA tracers. At the last separation step, Am are separated from Cm by the new hybrid type extractant. The extractant has high separation performance between Am and Cm. The separation factor between Am and Cm is 5.5 with no complexing agent in aqueous phase. Continuous counter-current experiments have already been carried out to demonstrate the validity of SELECT process [6,9,10].

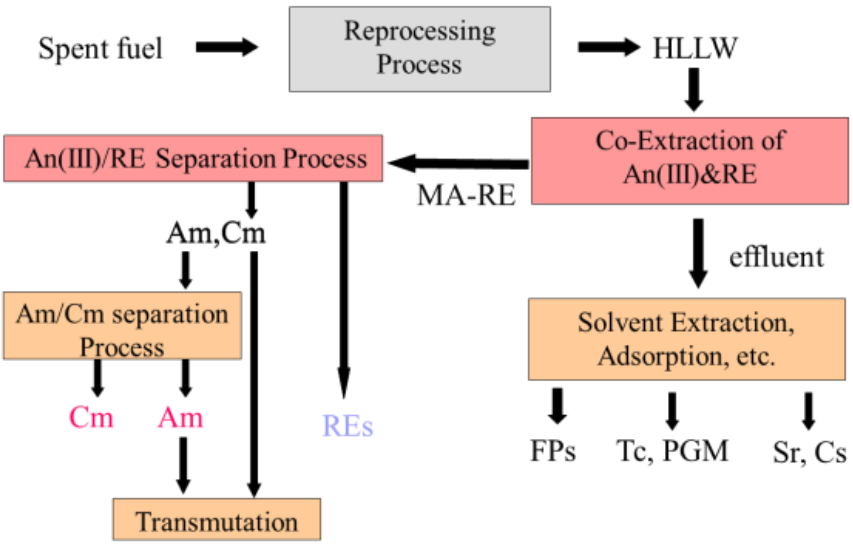

FIG. 1. Block flow of MA separation process in SELECT process.

3.1.2. Fabrication and reprocessing of Minor Actinide bearing fuel

For the MA-bearing fuel for ADS and its fuel cycle are also being developed. Uranium-free nitride fuel was chosen as the first candidate. The advantages of nitride fuel are good thermal properties and large mutual solubility among actinide elements. Though ^{15}N enrichment is necessary to prevent the formation of long-lived ^{14}C, the cost is considered reasonable because of the small throughput [11]. A pyrochemical process has been proposed as the first candidate for reprocessing of the spent nitride fuel, because this technique has some advantages over aqueous process, such as the resistance to radiation damage, which is an important issue for the fuels containing large amounts of highly radioactive MA. In addition, compactness of the facility, margin of criticality, and recycling feasibility of 15N are also advantages of pyrochemical process [12]. Various R&D on fabrication and reprocessing of MA nitride fuel has been continued in JAEA [13].

Schematic diagram of the nitride fuel pellet fabrication process is shown in Fig. 2. There are two routes for the synthesis of (MA, Pu)N. One is the carbothermic nitridation of (MA+Pu) oxides. The oxide mixture blended with a certain amount of carbon powder is pelletized and heat treated at 1300 °C under a nitrogen gas flow for nitridation, followed by a heat treatment at 1500 °C under N_2+H_2 mixed gas flow. Formation of a (Np, Pu, Am, Cm)N solid solution from the oxide mixture by this technique was demonstrated [14]. This method is applied for MAs separated from HLLW of commercial fuel reprocessing. The other route is nitridation of Pu and MAs recovered in Cd cathode by the pyrochemical reprocessing of the spent nitride fuel. Cd is distilled under a nitrogen atmosphere and the powder of (MA, Pu)N remained as the nitride product. Formation of PuN and AmN from Cd-Pu and Cd-Am system was demonstrated, respectively [15]. The (MA, Pu)N powder obtained by both the route is blended with the highly-pure ZrN, fabricated from reactor-grade Zr metal through the hydride. The mixture is pelletized and heat treated at ~ 1600 °C for solid solution formation, (MA, Pu, Zr)N. The solid solution is grounded to fine powder and pelletized again for sintering. Sintering is performed at ~1650 °C under the nitrogen gas flow to achieve 85~90 % of theoretical density. Small pellets and disk specimens with numerous compositions were fabricated for thermal properties measurements [16].

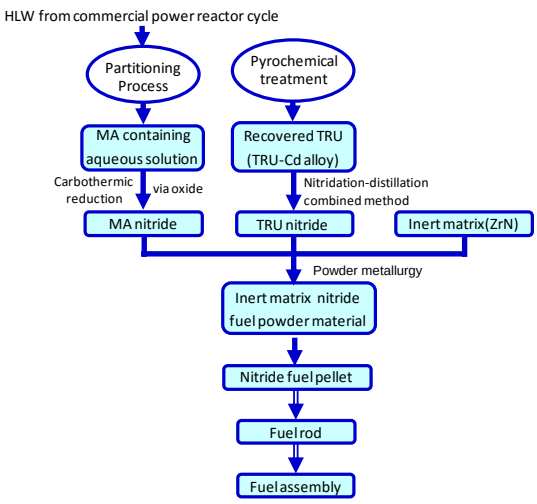

FIG. 2. Process flow of the MA nitride fuel fabrication.

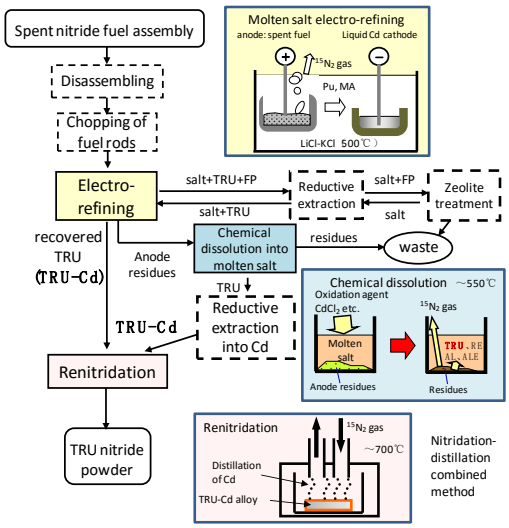

FIG. 3. Process flow of the pyrochemical treatment for MA-nitride fuel.

A process flow outline of pyrochemical treatment of the spent nitride fuel is shown in Fig. 3. For pyrochemical process, which had been originally developed for metal fuel treatment, electrolysis of nitride fuels and refabrication of nitrides from the recovered actinides have been our main concerns; other main processes have been developed mainly in metal fuel treatment technology. For nitride fuels, chemical dissolution of an anode residue has also been developed to maximize the recovery ratio of TRU in this process. Our latest tasks on the roadmap are conducting bench scale tests using MA samples including those recovered from irradiated fuels, and engineering scale tests with surrogates. To develop the apparatus aiming at engineering-scale tests

with surrogates, we are focusing on the experimental studies on an anode suitable for electrorefining of nitride fuels and the larger-scale apparatus for renitridation of the metals recovered in Cd cathode [17].

3.2. Overview of Research activities on Accelerator-Driven System (ADS) dedicated for Minor Actinide Transmutation

JAEA's reference design of ADS is a tank-type subcritical reactor, where lead-bismuth eutectic (LBE) is used as both the primary coolant and the spallation target, as shown in Fig. 4 [18]. The central part of the core is the spallation target region. The target region is provided by substituting central seven assemblies to a target module. In the target region, LBE is flowing from the core bottom. The proton linac with the proton energy of 1.5 GeV is used for the accelerator to operate the ADS. A tank-type system is adopted to take advantage of a simple design and to eliminate the necessity of heavy primary piping. All primary components, including primary pumps, steam generators, and auxiliary heat exchangers, are accommodated within the reactor vessel. The primary cooling system includes two mechanical pumps and four steam generators. The heat generated in the target and the core is removed by forced convection of the primary LBE, and transferred through the steam generators to a secondary water/steam system for power conversion. The auxiliary cooling system is provided as a backup system for decay heat removal. The inlet and outlet temperature of the LBE coolant were set to 300 and 407 ºC, respectively. To minimize the burnup swing and the power peaking, the fuel region is divided into two zones with the different initial Pu loading. The MA inventory is about 2500 kg. Since the transmutation rate of MA is 250 kg/yr as described before, the relative transmutation efficiency of MA is about 10 %/yr. The maximum keff during whole burnup cycles was set to 0.97. The burnup swing in whole cycles is about 3 %Δk/k. The maximum beam current is 20 mA (30 MW). For ADS to play important roles in the nuclear fuel cycle, several critical issues have to be resolved. Items of R&D are divided into three technical areas peculiar to the ADS: (1) superconducting linear accelerator (SC-LINAC), (2) LBE as spallation target and core coolant, and (3) subcritical core design and technology. For these technical areas, various R&D activities are progressing in JAEA.

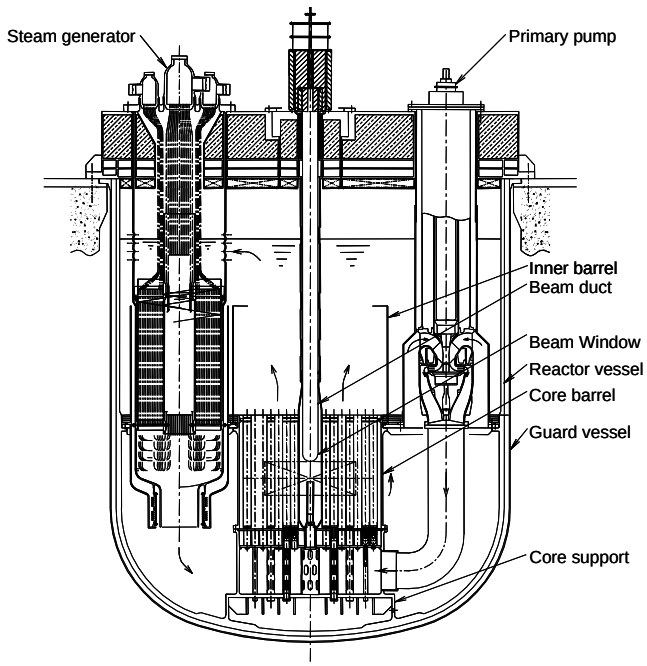

FIG. 4. JAEA proposed LBE-cooled 800MWth ADS for transmutation of MA.

3.2.1. High intensity proton accelerator for ADS

The proton accelerator for the ADS should have high intensity of power, more than 20 MW, with good economical efficiency and reliability. To realize such an accelerator, energy efficiency should be enhanced to assure the self-sustainability for electricity of the whole system. Taking account of these requirements, the superconducting linac (SC-linac) is regarded as the most promising choice. The SC-LINAC consists of a series of cryomodules, which contain two units of superconducting cavities made of high-purity niobium. JAEA has a prototype cryomodule to test the performance of the electric field and the helium cooling. In addition to the development of the cryomodule, the system study for the SC-LINAC was also performed.

Although the high reliability is necessary for the accelerator of ADS, frequent beam trips are experienced in existing high power proton accelerators. The beam trip may cause thermal fatigue problems in ADS components which may lead to degradation of their structural integrity and reduction of their lifetime. To achieve the high reliability for the accelerator, the requirements for the beam trip frequencies were estimated [19]. For this object, thermal transient analyses were performed to investigate the effects of beam trips on the reactor components. These analyses were made on the thermal responses of four parts of the reactor components; the beam window, the fuel clad, the inner barrel, and the reactor vessel. The results indicated that the acceptable frequency of beam trips ranged from 42 to 2×10^4 times per year depending on the beam trip duration. The former corresponded to the beam trip duration exceeding five minutes. On the other hand, the latter corresponded to the beam trip duration of 10 seconds or less. And the plant availability was estimated to be 70 % or greater in cases where the beam trip frequency decreased to the acceptable frequency of beam trips. In order to consider measures to reduce the frequency of beam trips on the high power accelerator for ADS, the acceptable frequency of beam trips were compared with the operation data of existing accelerators. The comparison showed that even at the present technological level of accelerators, the beam trip frequency for durations of 10 seconds or less is within the acceptable level. On the other hand, the beam trip frequency for durations of exceeding five minutes should be reduced to about 1/35 to satisfy the plant availability conditions.

3.2.2. Liquid lead-bismuth technology as spallation target and core coolant for ADS

It is of great importance to measure and predict the detailed flow distribution of LBE for the reliable design of ADS. In JAEA, measurement technique of LBE flow velocity profile have been developed by using the Ultrasonic Velocity Profiler (UVP) technique. UVP is a suitable tool to measure an instantaneous space-time velocity profile especially on a velocity measurement of an opaque liquid flow, such as liquid metal. Developed UVP measurement system was applied to the small experimental LBE loop. As a result of an experiment, the flow velocity profile was successfully measured, and it was found that there were periodical releases of eddy from the re-circulation region formed near the wall surface of the inner cylinder [20]. In the next step, a measurement for non-parallel directions with the centerline was carried out, and 3-dimensional structure of LBE flow configuration was found. Moreover, a new technique, which enables the measurement of the velocity vector in multi-dimensions on a line in the flow field, was developed. It was named Vector-UVP. This system was successfully applied to an actual liquid metal flow for three-dimensional velocity vector measurements. However, Vector-UVP system was able to measure the instantaneous flow which had a vortex flow with three-dimensional structure caused by the velocity different. In future, this system will realize the measurement of the various liquid metal flows in an actual temperature condition by development of the high-temperature ultrasonic transducer.

The compatibility of materials with liquid LBE is one of the main technical issues in R&D of ADS. It is considered that temperature, oxygen concentration, types of steels, flow rate of LBE and temperature difference between high and low temperature part in loop tests have great influence on corrosion behavior in liquid LBE. In JAEA, two kinds of activities are under way: the static corrosion test and the loop test. In the static corrosion equipment, specimens can be soaked in LBE of 450 ºC to 600 ºC with the oxygen concentration controlled. According to test results of many candidate steels for 3000 hours using the static corrosion equipment, the good corrosion resistance of steel with additional elements such as Si and Al, which are expected to form protective oxide films. The loop corrosion test aims at the acquisition of the corrosion data in the flowing LBE with temperature gradient and to test the feasibility of mechanical devices such as an electromagnetic pump and an electromagnetic flow meter. JAEA has built the LBE corrosion test loop named “OLLOCHI (Oxygen-controlled

LBE LOop Corrosion tests in HIgh temperature)", to obtain the corrosion data of relevant materials like T91 (Mod. 9Cr-1Mo) and SS316L steels at 400-550 °C under oxygen concentration controlled and flowing condition [21]. Figure 5 show the schematic flow of the OLLOCHI.

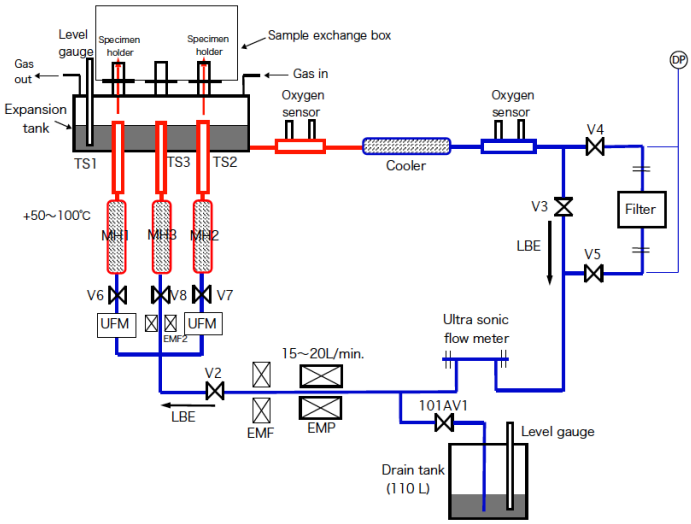

FIG. 5. Schematic flow of the OLLOCHI.

3.2.3. Conceptual design study of ADS

The critical issue in the design of the ADS is the engineering feasibility of the beam window. The beam window, which forms a boundary between the vacuum proton beam tube and the subcritical core, is one of the most important technical issues in the engineering feasibility of ADS. The beam window will be used in the severe conditions; (a) external pressure by LBE, (b) heat generation by the proton beam, (c) creep deformation by high temperature, (d) corrosion by LBE, and (e) irradiation damage by neutrons and protons. Although a feasible concept of the beam window for the ADS was proposed in our previous work. To mitigate the thermal load of the beam window not only in the normal operation but also in the transient situations, the R&D for the accelerator design and the mechanism of reactivity adjustment have been performed in JAEA. [22]

The improvement of the beam trip frequency is the important issues for the feasibility of the beam window. One of the methods to improve the reliability of the accelerator is redundancy which the duplication of critical components or functions of a system. In this study, technical feasibility and possibility for parallelization of the beam line were investigated for the enhanced redundancy of the ADS accelerator. The SC-Linac is mainly composed of low and high energy portions. The low energy portion consists of negative ion source, RFQ, DTL/SDTL and RF source. The high energy portion above 100MeV, consists of a series of cryomodules which contain two units of superconducting cavities made of high-purity niobium in the reference design. It is very difficult to converge the multiple proton beam in the high energy portion in terms of beam transport and controllability. Therefore, two methods of the parallelization were considered. One is the parallelization of the low energy portion in which the duplicated proton beams will be converged at the injection of the high energy portion. The other is multiplication of the entire beam line in which the multiple proton beams will be injected to the beam window. In both concepts, multiplicity was assumed as two. The necessary components and the technical feasibilities were compared for both concepts. In this study, we assumed the duplicated parts in operation, that is, half of the proton beams necessary for the operation of the ADS continue to be transported in both parts. In case of the duplication of the low energy part, each proton beam about 100MeV must be deflected by electromagnet and injected to the high energy portion by kicker magnet. Since the cryomodule for the SC-Linac assumed to be designed to accept 972 MHz RF wave, the frequency for each low energy portion should be adjusted to 486 MHz. In this case, if one of the low energy proton beam supply were stopped, it will be difficult to readjust the RF wave for the cryomodule to fit into the single beam injection. Moreover, the development of the kicker magnet for the proton beam with 100MeV is a significant technical challenge. From

these difficulties for the duplication of the low energy portion, we assume to adopt the duplication of the entire proton beam line. Figure 6 shows a conceptual view of the ADS with two proton beam lines. In this concept, although the construction cost will become expensive, the reliability of the SC-Linac will be significantly improved. Preliminary estimation of the beam trip frequencies shows the possibility to satisfy the acceptable beam trip for the ADS. The conceptual design study including the components design, equipment layout and beam dynamics have carried out.

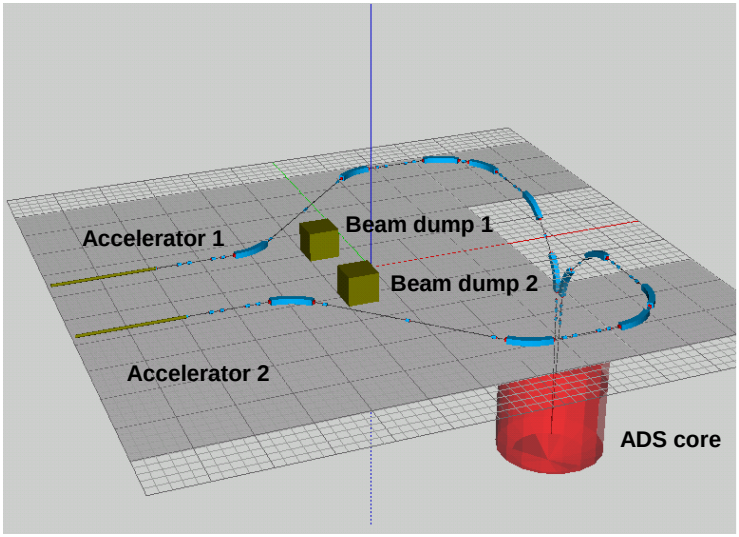

FIG. 6. Conceptual view of the ADS with duplicated SC-Linac.

In the neutronics design of the ADS, the most significant problems are large burnup reactivity swing and considerable radial peaking8). These problems are closely related to each other. Since the peaking factor depends on the effective multiplication factor (k_{eff}), increase of the minimum k_{eff} value during burnup cycle, namely the minimization of the burnup reactivity swing, is important to reduce the peaking factor. Moreover, the minimized burnup reactivity swing also means reduced proton beam current, since the proton beam current required to keep predefined power level is directly related to k_{eff}. Hence, reducing burnup reactivity swing is one of the most important design requirements for the ADS. In order to keep the thermal power at 800 MW, the beam current was adjusted from 8 to 18 mA (i.e. 12 to 27 MW) depending on the burnup swing. Although we considered the feasible concept of the beam window to accept the maximum beam power of 30 MW, it is desired the minimized burnup swing to enhance the engineering feasibility of the ADS. To reduce the proton beam current, a subcriticality adjustment rod (SAR) which was a B_4C control rod was employed. The neutronics calculation of ADS concept with SARs were performed and the mitigated design condition for the beam window was presented. Based on the mitigated design condition, the design of the beam window was revised by the particle transport analysis, the thermal hydraulics analysis and the structural analysis. Through these coupled analyses, a more feasible beam window concept was represented.

4. CONCLUSION

Recently in Japan, P&T technology is getting more public attention than ever before. In this context, national review activities for Monju and ADS were conducted. Moreover, the Government of Japan determined the new Strategic Energy Plan, where the importance of the R&D on P&T is clearly pointed out. Based on these recent situation, various R&D on ADS and its fuel cycle are being promoted in JAEA. To improve the technology level from basic research phase to semi-engineering research phase for the main component of the double-strata P&T concept, JAEA has carried out various R&D activities. The R&D on P&T in JAEA are basing on two kinds of concepts: one is the homogeneous recycling of MA in fast reactors and the other is the dedicated MA transmutation, so-called “double-strata” strategy, using the ADS. In this paper, recent R&D activities for the double-strata concept using ADS are briefly reviewd.

REFERENCES

[1] The 4th Strategic Energy Plan (2014); English translation at: http://www.enecho.meti.go.jp/en/category/others/basic_plan/pdf/4th_strategic_energy_plan.pdf (accessed 2019).

[2] The 5th Strategic Energy Plan (2018); English translation at: http://www.meti.go.jp/english/press/2018/pdf/0703_002c.pdf (accessed 2019).

[3] Advisory Committee on Radioactive Waste Measures, Atomic Energy Commission (1988), "Long-term Programme for Research and Development on Nuclide Partitioning and Transmutation Technology", October 11, 1988. (in Japanese) http://www.aec.go.jp/jicst/NC/senmon/old/backend/siryo/back21/sanko2.htm

[4] AOKI, S., "Research and Development of Technologies for Partitioning and Transmutation of Long-lived Nuclides in Japan - Status and Evaluation", Proc. OECD/NEA 6th. Information Exchange Meeting on Actinide and Fission Product Partitioning and Transmutation, December 11-13, 2000, Madrid, Spain (2000).

[5] ATOMIC ENERGY COMMISSION, "Concerning the Report Entitled 'Current Status and a Way Forward to Promote the Research and Development of Partitioning and Transmutation Technologies'", April 28, 2009 (2009). http://www.aec.go.jp/jicst/NC/senmon/bunri/kettei-090428e.pdf

[6] BAN, Y., SUZUKI, H., HOTOKU, S., KAWASAKI, T., SAGAWA, H., TSUTSUI, N., MATSUMURA, T., Extraction of trivalent rare earths and minor actinides from nitric acid with N,N,N',N'-tetradodecyldiglycolamide (TDdDGA) by using mixer-settler extractors in a hot cell, Solvent Extraction and Ion Exchange. **37** 1 (2019).

[7] MORITA, Y., TSUBATA, Y., SASAKI, Y., KIMURA, T., "Development of a Separation Process for Trivalent Actinides and Rare Earths by Extraction with N,N,N',N'-Tetradodecyldiglycolamide with the Aid of a Process Simulation Code, PARC-MA", Proc. of GLOBAL2011, Makuhari, Japan, 11-16 Dec., 2011 (2011).

[8] MATSUMURA, T., TSUBATA, Y., "Development of Separation Process for Minor Actinides using TDdDGA and New Extractants", Proc. of 13th Information Exchange Meeting on Actinide and Fission Product Partitioning and Transmutation, Seoul, Korea, 23-26 Sep, 2014 (2014).

[9] BAN, Y., HOTOKU, S., TSUBATA, Y., TSUTSUI, N., MATSUMURA, T., Extraction separation of U and Pu by N,N-di(2-ethylhexyl)-2,2-dimethylpropanamide (DEHDMPA) and N,N-di(2-ethylhexyl)butanamide (DEHBA) using mixer-setters in the presence of degradation products of DEHDMPA and DEHBA, Solvent Extr. Res. Dev., Jpn., **22** 1 (2015) 47–55.

[10] BAN, Y., HOTOKU, S., TSUBATA, Y., MORITA, Y., Uranium and plutonium extraction from nitric acid by N,N-di(2-ethylhexyl)-2,2-dimethylpropanamide (DEHDMPA) and N,N-di(2-ethylhexyl)butanamide (DEHBA) using mixer-setters, Solvent Extraction Ion Exchange. **32** 4 (2014) 348–364.

[11] OIGAWA, H., TSUJIMOTO, K., NISHIHARA, K., SUGAWARA, T., KURATA, Y., TAKEI, H., SAITO, S., SASA, T., OBAYASHI, H., "Role of ADS in the back-end of the fuel cycle strategies and associated design activities: The case of Japan", J. Nucl. Mat., 415, pp. 229-236 (2011).

[12] HAYASHI, H., SATO, T., SHIBATA, H., KURATA, M., IWAI, T., ARAI, Y., "Pyrochemical traeatment of spent nitride fuels for MA transmutation", Sci. China. Chem., **11** 57, (2014) 1427-1431.

[13] HAYASHI, H., NISHI, T., TAKANO, M., SATO, T. SHIBATA H., KURATA, M., "Recent progress and future R&D plan of nitride fuel cycle technology for transmutation of minor actinides", Proc. of 13th Information Exchange Meeting on Actinide and Fission Product Partitioning and Transmutation, Seoul, Korea, 23-26 Sep., (2014).

[14] TAKANO, M., AKABORI, M., ARAI, Y., ET AL., "Thermal expansion of TRU nitride solid solutions as fuel materials for transmutation of minor actinides", J. Nucl. Mater. **389**, (2009) 89-92.

[15] HAYASHI, H., SHIBATA, H., AKABORI, M., et al., "Electrolysis of AmN in LiCl-KCl eutectic melts and renitridation of Am recovered in liquid Cd cathode", Electrochemistry. **77**, (2009) 673-676.

[16] NISHI, T., TAKANO, M., ICHISE, K., et al., "Thermal conductivities of Zr-based transuranium nitride solid solutions", J. Nucl. Sci. Technol., **48**, (2011) 359-365.

[17] HAYASHI, H., SATO, T., SHIBATA, H., TSUBATA, Y., "Research and Development on Pyrochemical Treatment of Spent Nitride Fuels for MA Transmutation in JAEA", Proc. of 14th Information Exchange Meeting on Actinide and Fission Product Partitioning and Transmutation, San Diego, USA, 17-20 Oct., (2016).

[18] TSUJIMOTO, K., OIGAWA, H., KIKUCHI, K., KURATA, Y., MIZUMOTO, M., SASA, T., SAITO, S., NISHIHARA, K., UMENO, M., TAKEI, H., "Feasibility of Lead-Bismuth-Cooled Accelerator-Driven System for Minor-Actinide Transmutation," Nucl. Tech., **161**, (2008) 315-328.

[19] TAKEI, H., NISHIHARA, K., TSUJIMOTO, K., OIGAWA, H., "Estimation of Acceptable Beam-trip Frequencies of Accelerators for Accelerator-Driven System and Comparison with Existing Performance Data," J. Nucl. Tech., **49** 4, (2012) 384 – 397.

[20] OBAYASHI, H., TASAKA, Y., KON, S., TAKEDA, Y., "Velocity vector profile measurement using multiple ultrasonic transducers", Flow Meas. & Inst. **19** 3-4 (2008) 189-195.

[21] SAITO, S., OKUBO, N., OBAYASHI, H., SASA, T., "Status of LBE corrosion test loop "OLLOCHI" and experiments at JAEA", Proc. Third International Workshop on Technology and Components of Accelerator-Driven Systems (TCADS-3), 6-9 Sep. 2016, Mito, Japan, NEA/NSC/R (2017) 2, pp. 195-200 (2017).

[22] SUGAWARA, T., TAKEI, H., IWAMOTO, H., OIZUMI, A., NISHIHARA, K., TSUJIMOTO, K., "Research and development activities for accelerator-driven system in JAEA", Progress in Nuclear Energy, **106** (2018) 27-33.