THE PWR SPENT FUEL DRY STORAGE PROJECT EXPERIENCE FEEDBACK IN CHINA

S. BIN
China Nuclear Power Engineering Company LTD
DA Peng, Shenzhen, China
Email: shangguanbin@cgnpc.com.cn

Y. CHEN, R. LIAO，C. CHENG
China Nuclear Power Engineering Company LTD
DA Peng/Shenzhen, China

Abstract

In order to alleviate the pressure brought by the rapid growth of spent fuel in NPPs, insufficient reprocessing capacity and high construction cost, China has carried out the strategy of technology import and equipment localization to construct the PWR spent fuel dry storage project for the first time. The paper firstly introduces the project implementation strategy, product selection and bidding, engineering construction. Then it presents the main experience feedback which includes: 1) Taking full advantages of Architecture Engineering model widely used and verified in NPPs construction in China, promoting the coordinated progress of spent fuel dry storage project design, construction and domestic dry storage components manufacturing industry chain; 2) Based on its own needs, carrying out comprehensive investigations and studies before importing the technology, fully identifying the import risks and formulating plans in time; 3) Clarifying the responsibilities of all parties in the contract, and accurately defining the boundary of intellectual property rights; 4) Actively cooperating with the regulatory authorities to fill the gaps in domestic regulations and standards. In addition, according to the reprocessing strategy and the demands of NPPs customers, China has independently researched and developed spent fuel dry storage components, which has formed independent intellectual property rights. And the total price of spent fuel canister is reduced by about 53% compared with imported equipment, which has significant economic benefits. Finally, in view of the shortcomings of the existing dry storage technology, the paper also prospects the future technological development, and proposes a variety of new product design schemes for the first time, which aims at jointly promoting

1. INTRODUCTION

So far, there are three main international spent fuel management strategies, including reprocessing, direct disposal and Wait and See [1]. Whatever fuel cycle strategy is carried out, the major nuclear power countries in the world implement interim storage on a large scale. The main common purpose is to provide the buffer for exploring more mature and economical technical solution, or to reduce the reprocessing pressure brought by the insufficient reprocessing capacity. Based on the experience of Fukushima accident and application performance analysis, dry storage technology has more advantages in security, economy and flexibility, and has developed into the mainstream of global interim storage. Under this background, in order to alleviate the pressure brought by the rapid growth of spent fuel in NPPs, insufficient reprocessing capacity and high construction cost, China has determined to build the PWR spent fuel dry storage project for the first time based on mature international experience and achieve the equipment localization synchronously.

2. SPENT FUEL DRY STORAGE TECHNICAL CHARACTERISTICS

The typical technical characteristics of dry storage of spent fuel are that spent fuel assemblies are stored in canister filled with inert gas for redundant sealing, and then stored in concrete modules for 40-80 years. During storage period, the decay heat of spent fuel assembly can be continuously discharged through passive ventilation through pressure difference between inlet and outlet (no power supply). It has the advantages of simple structure, simple maintenance, flexible use and remarkable economic advantages, as shown in Fig. 1. At present, the main dry storage products in the world include concrete, metal, underground silos and centralized storage [2]. The application results show that metal and concrete containers are the most widely used dry storage containers. However, concrete container has better application performance because of its economic advantages.

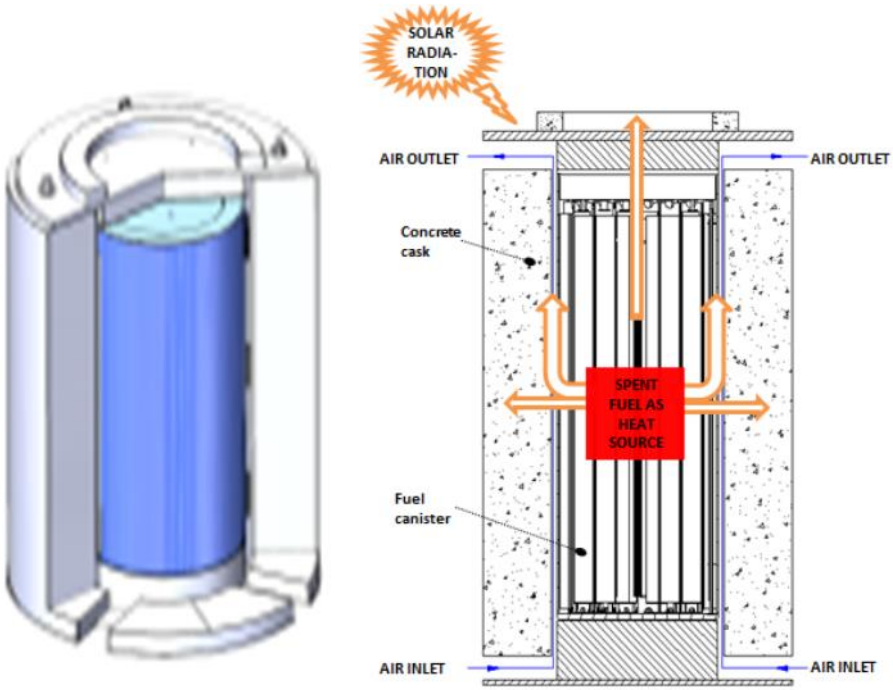

FIG. 1. Schematic diagram of dry storage.

2.1. Current situation and development situation of spent fuel treatment in China

In 1983, China proposed a three-step strategy for nuclear energy development (pressurized water reactor-fast reactor-fusion reactor) and adhered to the nuclear fuel recycle principle. In 2010, China mainland established a spent fuel treatment and disposal fund system for nuclear power plants. By the end of 2016, a total of 11.7 billion RMB of spent fuel treatment and disposal fund had been collected for spent fuel transportation, storage and reprocessing.

On the demand side, as of February 1, 2019, China had 45 nuclear power units (excluding Taiwan, China) in operation and 11 units in construction. According to China's "Capacity Building Plan for Spent Fuel Storage and Transportation System of PWR Nuclear Power Station"[3]. the production and transportation of spent fuel are shown in Fig. 2. On the supply side, 500 tons storage pools are in operation. A new 800-ton storage pool has been built and plans for the 200 tons and 800 tons reprocessing plants with matched storage pools are under way.

In summary, the NPPs spent fuel is growing rapidly, the storage and reprocessing capacity is relatively inadequate, and the supply side gap is large. Flexible and economical intermediate storage mode must be adopted to provide buffer for the back end of fuel cycle. Referring to mature international experience, China has determined to adopt dry storage technology. In view of the fact that some power plants have been operating for more than 20 years and spent fuel pools are full, China has taken the Daya Bay NPPs and Tianwan NPPs as the first demonstration projects.

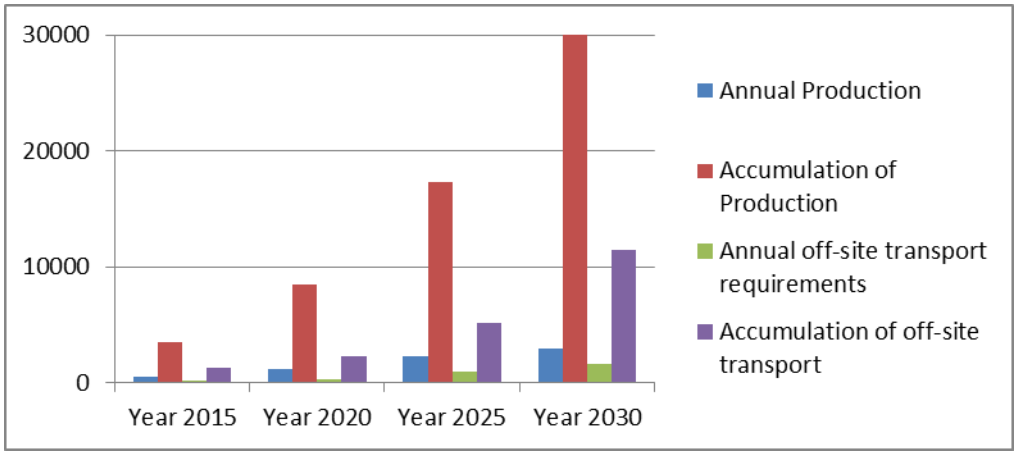

FIG. 2. Generation, accumulation of generation and accumulation of far away from the site (unit: tHM).

3. DRY STORAGE OF SPENT FUEL OPERATION

The research and development of dry storage products for spent fuel has begun in 2012. Considering the urgency of spent fuel transportation and storage, and that spent fuel storage components are important safety equipment with safe and mature engineering experience, China put the technology import strategy in priority to ensure the NPPs operation safety and alleviate the reprocessing pressure by using the internationally mature and advanced products.

In order to take full advantages of domestic manufacturing industry, China adopts the strategy of "technology import + local manufacturing + local construction and installation", which can significantly reduce the product cost, shorten the fabrication period, reduce the project cost, and also improve the economy of China's spent fuel management fund.

For autonomous research and development, as China has completed the whole design and fabrication of engineering prototype and is currently in the qualification test stage, in order to avoid intellectual property risks, technology transfer is only limited to equipment manufacturing, operation service and experience feedback. The design content is wholly excluded.

4. PRODUCT SELECTION AND BID

4.1. Procurement Strategy

According to the implementation strategy of "technology introduction + local manufacturing + local construction and installation" for dry storage of spent fuel in China, Daya bay and Tianwan NPPs have formulated the following procurement strategies for main equipment, see Table 1.

TABLE 1. PROCUREMENT STRATEGIES FOR MAIN EQUIPMENT

No.	Equipment	Proportion	Cooperation
1	Spent fuel canister	70%	Designed and made by international suppliers
		30%	Designed by international suppliers, manufactured in China by domestic suppliers
2	Concrete module	1 100%	Designed and manufactured in China construction and installation in China

4.2. Bidding mode

In order to fully understand the product characteristics and accurately define the responsibilities, China adopted the "Multi-stage bidding" mode. In the Firstly stage, it concentrated on the clarification for components supply scope, licence service, commissioning training, the right to use components drawing for 30% localization canisters. Then it started the bidding in the second stage.

Besides, the reactor type (PWR/VVER), spent fuel assemblies (square/hexagon), the handling and operation condition and the site are different. For the intensive and scale effect, China adopted joint bidding. The advantages are as following:

(a) Design standardization: Although the canister internal structure and neutron absorber material are different, the design and fabrication codes and standards are identical, as well as the external physical dimension, interface and the main auxiliary tools.
(b) Local manufacture: 30% of the main storage equipment in these two projects is supplied by the same supplier. The tax has been lowered for about 10%.
(c) Local construction and installation: 100% of the concrete mould in in these two projects is supplied by the same supplier. The tax has been lowered for about 10%.
(d) Scale effect: The price of a single set of local manufactured equipment (tax free) has reduced for about 33%.

4.3. Bidding results

The horizontal concrete module storage technology was finally determined by the public announcement of the results of international public bidding in 2015.The suppliers is responsible for:

(a) The completeness of components supply (the main components/Auxiliary tools/Spare parts/Consumers).
(b) License application service for the dry spent fuel components.
(c) Commission training and support (the technical responsibility is extended to the 30% localization components).
(d) The right to use components drawing for 30% localization canisters.
(e) Technology transfer (limited to equipment manufacture, operation service and experience feedback).

5. ENGINEERING CONSTRUCTION

5.1. Storage scale

The project storage scale is nearly 400 tons and 864 spent fuel assemblies. The following four key factors should be considered when determining the scale of construction:

(a) National spent fuel reprocessing capacity and annual receiving plan.
(b) The NPPs spent fuel storage and transportation balance analysis. It’s based on the available capacity of spent pool, fuel cycle plan, spent fuel number of core unloading and performance of spent fuel assemble. The project is mainly based on the 3 years storage demand of six nuclear power units.
(c) The storage area of the site.
(d) Layout scheme of spent fuel storage facilities.

5.2. Site selection

Considering international experiences, two types of plant sites including independent storage facilities and NPPs auxiliary facilities are selected. Based on the comprehensively comparative from the technology, safety, environment and economy, the site is finally located in the entity protection zone of the nuclear power

plant, which serves as the NPPs auxiliary facility. The main advantages are the economy by sharing the NPPs resource, small quantity of site renovation works and operation convenience, but the modifications and necessary isolation related to the entity protection fence, underground pipeline are relatively complicated since the site is close to the nuclear island, see Fig. 3.

FIG. 3. Schematic diagram of dry storage facility and site condition.

5.3. Techno-economic evaluation standards for product selection

Considering the difficulty of imported technology and the economy, China adopts the comprehensive evaluation method. The ratio of technical services and business prices is 6:4, with a total score of 100. The total bidding top price is set to control the project cost. The top price of key components and tools are also set to avoid unbalanced quotation and low performance configuration.

The technical evaluation methods focus on the following key elements with a higher weight and as the scrapping condition:

(a) The supply scope must include equipment design and technical responsibility.
(b) The products must follow the laws and regulations and licensing applications in China.
(c) The products must meet the requirements of spent fuel assemblies loading design basis, site conditions and plant interfaces. The price evaluation methods focus on the following key elements with a higher weight value:
(a) Costs in the construction and operation period, technology service and technology transfer;
(b) The adaptability of equipment localization to China's local industrial chain.
(c) Economic impact of different capacity for each unit (19/24/32/37 assemblies).

5.4. Engineering management

5.4.1. AE management mode

Considering the technology complexity, many units involved and professional interfaces, the the project adopts the Architect Engineering model widely used in nuclear power engineering to establish an integrated project team including Engineering, Procurement, Construction and Start-up. It makes the project safety, quality, schedule and cost management achieve satisfactory results.

For engineering design, the local engineer is responsible for the facility overall design, and the supplier is only responsible for the main components design. Especially, the local engineer develops the new technology, new materials (neutron absorber, concrete material), and then directly used in the new components, which effectively lead and drive and technological progress of whole industry chain through technological innovation.

5.4.2. Engineering management

(a) Project Schedule

The project application was approved on 31 August 2017.The hot test completion time is November 15, 2019. The project completion and acceptance time is December 31, 2021.

Three key factors including project approval, licensing application and autonomy are identified to control the Project Schedule. The project schedule meets the requirements.

(b) Project Cost Management

The following effective measures are taken to control project cost:

(i) Increase the design depth, the project proposal basically achieves the feasibility study depth, and the feasibility study basically achieves the preliminary design depth.

(ii) For the adjustment of investment, major equipment, building area, design scheme and schedule extension, the project can only be implemented after approval by the authorities.

(iii) Establishing special fund account and detailed cost subjects, the schedule and cost is under linkage control. The completion rate of fund plan must reach 90%, and the cost deviation is less than or equal to 3%.

(c) Safety and Quality Control

The storage facility is close to the fuel plant which has been in operation for 25 years. The modification including the complex underground pipelines, tense working areas, multi-type cross-operation are the focus of safety and quality control. The project upholds the principle of "safety first, quality first, pursuit of excellence". By referring to the good practice of nuclear power, the *Handbook of Safety Standardization and International Benchmarking Assessment for Nuclear Power Projects* [4], jointly developed by CGNPC and DNV is used in the dry demonstration project, and the safety environment objective is generally controlled.

(d) License Application

China's nuclear safety regulatory authorities promulgated the Principles for Safety Assessment of Spent Fuel Dry Storage System in NPPs which positions the spent fuel storage components as auxiliary systems of NPPs and incorporates it into the scope of operation license of nuclear power plants.

In the safety review process, the supplier components FSAR report problems are as following [5]:

— China requires to use the burn-up credit critical safety analysis method, Keff < 0.95 under normal conditions, and < 0.98 under abnormal and accident conditions.
— Shielding analysis shall follow China's radiation protection regulations and standards.
— Provide thermal test and certification documents for components and concrete materials.

5.5. Localization and autonomy of equipment

According to equipment and technical requirements, for the 30% localization canisters, the design and manufacturing standards is ASME III NB, the Quality grade is QA1.All the canister can be locally fabricated in China excluded the neutron absorber. The concrete storage module and the last one autonomy canister can achieve 100% localization in China.

Through sustained rapid development and innovation in recent 10 years, a complete, independent and complete industrial supply chain with sufficient capacity has been built within Chinese manufacturing industry. The China Nuclear Power Engineering Co., Ltd. establishes the nuclear power equipment "ecological circle" by building the R&D centre with 87 core enterprises and 5400 suppliers.

At present, the spent fuel dry storage localization supplier has the production capacity of 10-12 canisters per year with the advanced bending machine（W11S-32×6000）, automatic argon arc welding machine for lattice frame, edge milling machine, gantry-type CNC boring and milling machining, ground-type CNC boring and billing machining. It has successfully led to a number of assembles and material sub-suppliers to form the first industrial chain of dry storage equipment in China.

6. EXPERIENCE FEEDBACK

6.1. Taking advantages of Architecture Engineering model, promoting the coordinated progress of project design, construction and domestic spent fuel dry storage manufacturing industry chain

For the complex projects, the Architecture Engineering model widely used in China's NPPs construction can provide the integrated solutions and services for customers, including design, procurement, manufacturing, construction and commissioning. The advantages are as follows:

(a) Simplifying organizational interfaces and improving management efficiency.
(b) Proposing complete plans, and arranging safety, quality, progress, cost, technology as a whole.
(c) Playing the leading role, integrate high-quality industrial chain resources and technology, and promote innovation and technological progress of the whole industrial chain.

6.2. Carrying out comprehensive investigations and studies before importing the technology, fully identifying the import risks and formulate plans in time

The project experience feedback on technical investigations and risk control are shown in Table 2 below.

6.3. Clarifying the responsibilities of all parties in the contract, and accurately defining the boundary of intellectual property rights

The constructor should be responsible for the scope of project construction, key requirements and technical requirements; pay attention to the differences between the importing country standards, spent fuel assembly design basis, site conditions and operating interfaces. The supplier shall provide complete equipment supply, technical services and the right to use localized equipment.

For the intellectual property, there shall be significant differences between the independent design technology scheme and the imported technology. Technology transfer is suggested to be limited to manufacturing, operational services and experience feedback, and does not involve design technology transfer.

6.4. Actively cooperate with supervisors to fill the gaps in regulations and standards

For the technology imported country, there is usually a lack of applicable regulatory standards and guidance documents. It’s necessary to keep close cooperation with the regulatory authorities to fill the gaps. Experience feedback is as follows:

(a) Identifying the differences in regulations between the imported country and domestic country, which directly affect the technical feasibility, safety, reliability and economic of the imported products.
(b) For reprocessing strategy, dry storage belongs to interim storage way. The spent fuel needs to be retrieval to the reprocessing plants. The interface between the NPPs, off-site transportation and reprocessing plant must be considered, especially for the welding seam cutting and retrieving process.

TABLE 2. RISKS ANALYSIS OF DRY STORAGE PROJECT IN CHINA

No	Risk		Countermeasures	Experience Feedback
1	Loading Performance Requirements for Spent Fuels	Not satisfied with "overall higher level" loading performance (1.1-1.3kw/assembly)	Loading demand is regarded as an important bidding condition. If it does not meet the requirements, it is required to complete the re-equipment forensics.	Combining with the fuel management strategy of nuclear power plant, the short-term and long-term demand is synthesized, and the design benchmark is defined.

Interface Conditions of Fuel Building	For the CPR1000 nuclear power plant, the Fuel Building size is small and may not meet the interface requirements.	1) Giving priority to concrete containers; 2) Horizontal transportation must be adopted to enter and leave fuel plant.	Combining with loading and storage operation technology when the key interface parameters of power plant fuel plant are determined.
Radiation shielding performance requirements	International modules are usually stored in the opening, which may not meet the requirements of national radiation protection regulations.	A new spent fuel storage building (concrete shielding material) is added as an auxiliary radiation shielding facility.	The national radiation protection regulations and standards should be strictly followed.
Ventilation and heat transfer requirements	When new radiation shielding facilities are added, ventilation requirements must also be taken into account synchronously.	Passive natural ventilation design is adopted in the building.	Refer to the design of the passive ventilation structure of the building of this project.
Spent fuel storage operations	The storage area of the factory site is only 30m wide, and the intermediate channel is only 10.2m left, which does not meet the interface requirements.	1) The new integrated self-driving transfer trailer is adopted. 2) Laser positioning system is adopted.	For storage sites with limited available space, the experience of this project can be served as a reference.
Cutting and Recycling of Spent Fuel Assemblies	Tests with simulation canisters are conduct to complement the test experience of strip material.	It is required to add adjustable electric heating function to simulation canister, and simulate high temperature and pressure environment as far as possible.	The experience of this project can be referred to.

7. AUTONOMOUS R&D AND PROSPECTS FOR FUTURE TECHNOLOGICAL DEVELOPMENT IN CHINA

7.1. Autonomous R&D of spent fuel in China

The requirements and R&D route of dry storage project in China are shown in Fig. 4. For the canister independent research and development, it's required to form the independent intellectual property rights. The performance shall be competitive. And the canister shall adopt the mature and feasible manufacturing technology and match the interface of NPPs and reprocessing plant.

Since the independent R&D started in 2012, through the accumulation of independent core competence, the key technologies of independent design have been basically overcome, including structural design, mechanical analysis, thermal analysis, critical analysis and shielding analysis, and registered patents to form independent intellectual property rights. In particular, some key functional materials (heat and irradiation - resistant and high-strength concrete) have been in the international leading level. The NPPs intelligent spent fuel loading software and thermal analysis and calculation software platform are developed for the first time, which fill the international technical gap.

According to the economic analysis, the total price of the first set of equipment is about 45% lower than that of the imported equipment, in which the price of the equipment itself is reduced by about 50% and the tax is reduced by 10%. Considering the scale effect of subsequent autonomy (calculated from the 10th unit), the total price of equipment is reduced by about 53% compared with that of imported equipment, which has significant economic benefits.

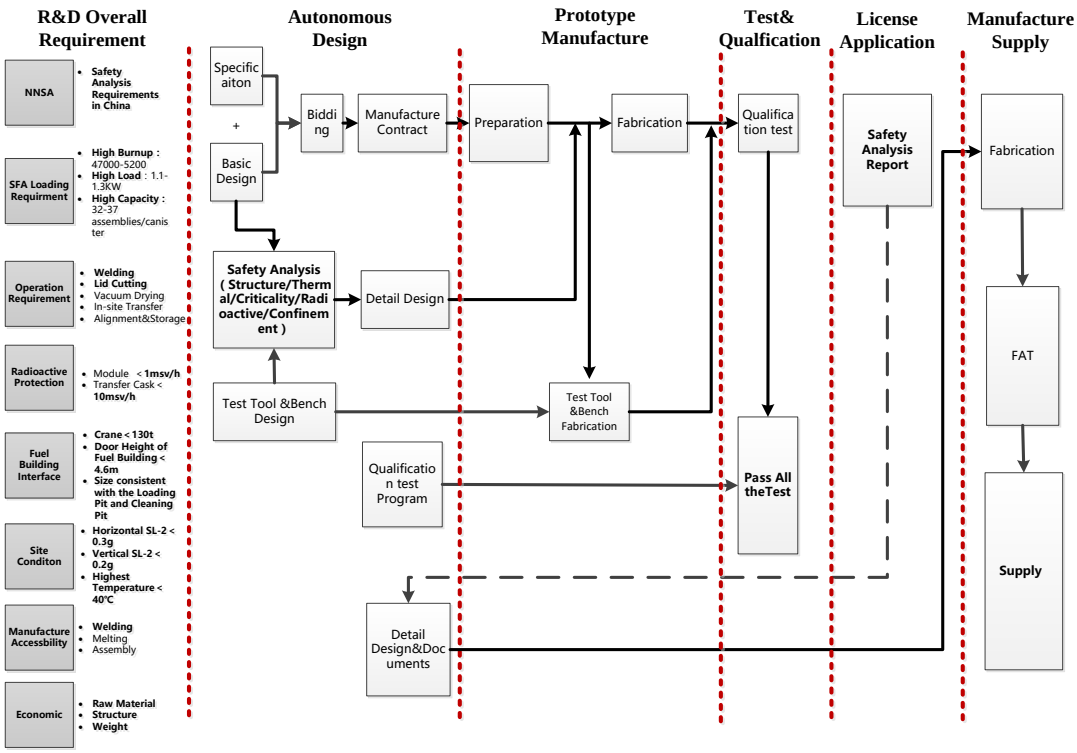

FIG. 4. Requirements and R&D route of dry storage project in China.

7.2. Prospects for future technological development

Through independent R&D stage, we realize there are still shortcomings in the existing technology, and the future direction should be further to improve the products convenience, economy and safety.

(a) Promoting the economy and convenience of products

The top cover is sealed with flanges and the cylinder body is also a thin-walled metal shell. With this design, the economy of the equipment can be ensured, and it is also convenient for components to be retrieved and recycled, see Fig. 5.

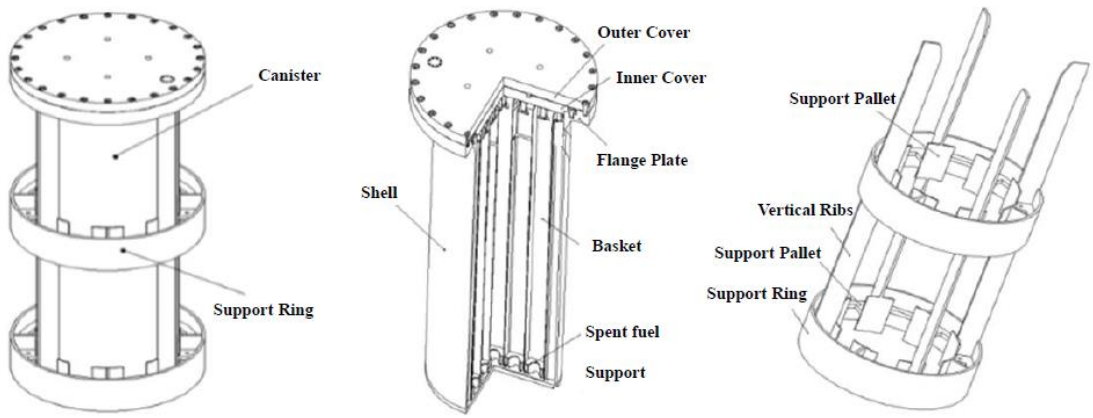

FIG. 5. The New Innovative Canister Design for Efficient Unloading & Repeat Using.

(b) Improving equipment safety

(i) Development direction 1: Prevent blockage of vent

The air intakes in storage facility are located at low positions, with a higher possibility of air intakes blockage and external attack. Double anti-clogging design of "high intake" and "covered ventilation" can be adopted to enhance the safety performance, see Fig. 6.

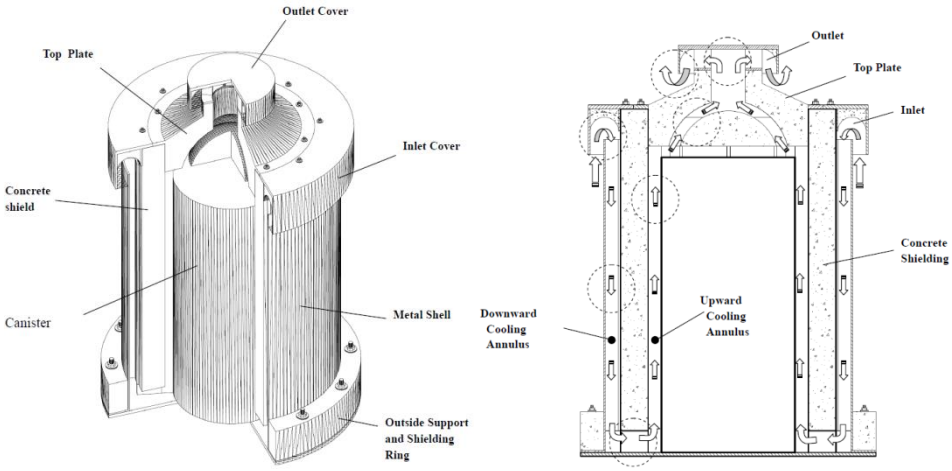

FIG. 6. The Innovative New Concrete Silo Design for High Ventilation Design to prevent the blockage.

(i) Development Direction 2: Improving Design Pressure of Tanks

The top cover of existing spent fuel canisters is designed with flat bottom, and the design pressure under normal working conditions is relatively low, only 1 bar-7 bar. Elliptical head structure design can be adopted to withstand medium or high pressure environment, while enhancing the convective heat transfer, see Fig. 7.

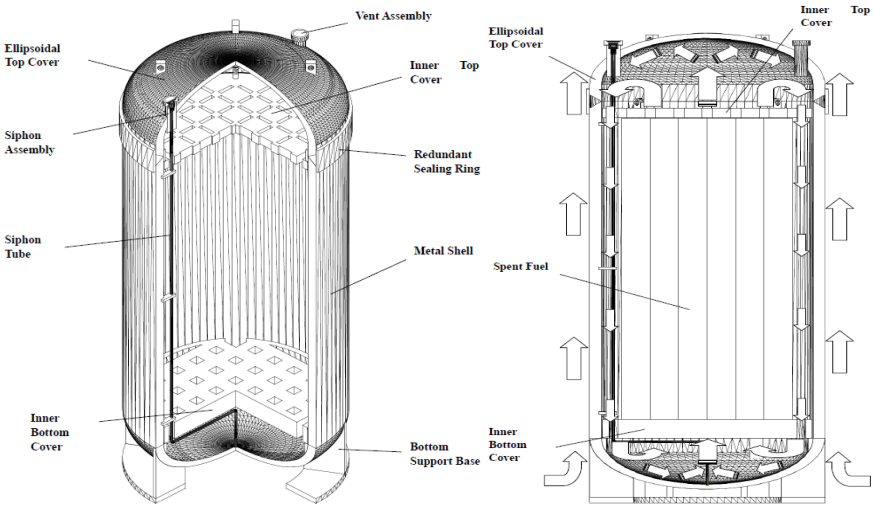

FIG. 7. Innovative new canister design for high inner pressure to prevent the accident leakage.

(c) Centralized storage of spent fuel storage equipment

Regular square cube structure and through ventilation design were adopted to change vertical circular silos from decentralized layout to intensive layout, so as to maximize the utilization of storage space, see Fig. 8.

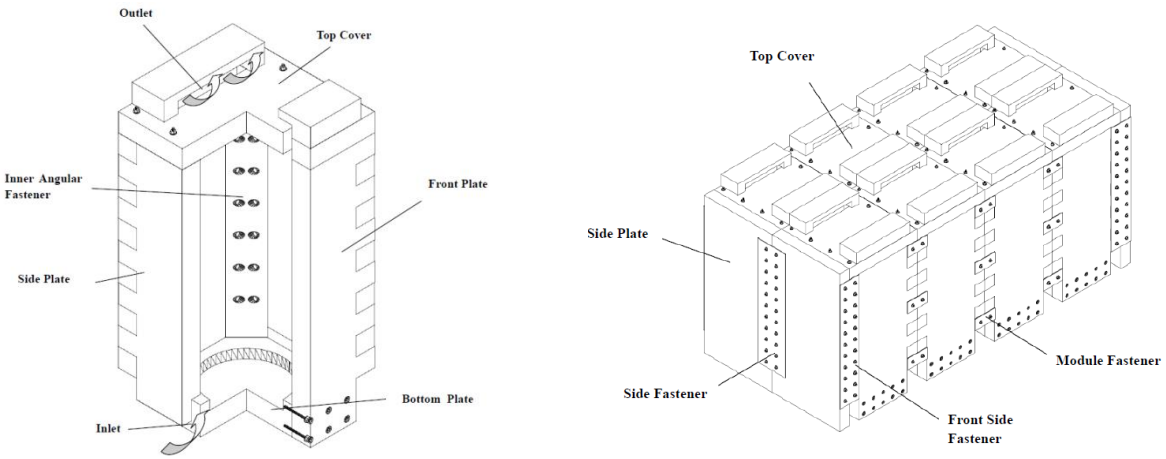

FIG. 8. Innovative New Vertical Concrete Silo Design for Intensive Centralized Storage.

8. CONCLUSION

The paper introduces the spent fuel interim storage project experience in China, including implementation strategy, product selection and bidding and engineering construction. According to Chinese project experience, four main points are concluded to serve as the useful feedbacks for subsequent SFIS projects, which include:

- Taking full advantages of Architecture Engineering model widely used and verified in NPPs construction in China, promoting the coordinated progress of spent fuel dry storage project design, construction and domestic dry storage components manufacturing industry chain;
- Based on its own needs, carrying out comprehensive investigations and studies before importing the technology, fully identifying the import risks and formulating plans in time;
- Clarifying the responsibilities of all parties in the contract, and accurately defining the boundary of intellectual property rights;
- Actively cooperating with the regulatory authorities to fill the gaps in domestic regulations and standards.
- In view of the shortcomings of the existing dry storage technology, the future development direction should be to further improve the products convenience, economy and safety.

REFERENCES

[1] INTERNATIONAL ATOMIC ENERGY AGENCY, Operation and Maintenance of Spent Fuel Storage and Transportation Casks/Containers, IAEA-TECDOC-1532, IAEA, Vienna (2007).

[2] INTERNATIONAL ATOMIC ENERGY AGENCY Selection of Away-From-Reactor Facilities for Spent Fuel Storage, IAEA-TECDOC-1558, IAEA, Vienna (2007).

[3] Capacity Building Plan for Spent Fuel Storage and Transportation System of PWR Nuclear Power Station (2016-2030), State Administration of Science Technology and Industry for National Defense, Beijing, June,2016.

[4] Handbook of Safety Standardization and International Benchmarking Assessment for Nuclear Power Projects, CGNPC and DNV, 2015.

[5] Safety Review Principles of Nuclear Power Plant Spent Fuel Dry Storage System (Trial), National Nuclear Safety Administration, Beijing, December 2015.