VERIFICATION OF CODE-TP MODEL OF LIQUID CHROMATOGRAPHY PROCESS USED IN PROCESSING TECHNOLOGY FOR FAST REACTORS SNF

L. PODREZOVA, K. DVOEGLAZOV
SK -VNIINM
Moscow, Russian Federation
Email: Lnpodrezova@bochvar.ru

S. LIVENTSOV, A. GOZHIMOV
TPU
Tomsk, Russian Federation

Abstract

The mathematical model of uranium extract purification process from technetium was made in TPU in the CODE-TP media. In order to maximize the adequacy of the CODE-TP calculations, experimental verification of the simulating algorithms for the technological process of the uranium extract purification from technetium using lab-scale liquid chromatography unit (LCU) at JSC VNIINM was carried out. To test the process simulation algorithms, a series of experiments was carried out with the aim of producing data for comparison with the mathematical model.

1. INTRODUCTION

In 2016, within the framework of the «PRORIV» project, Tomsk Polytechnic University created a calculation code (CODE-TP), which allows to simulate work of future facility in industrial scale [1]. In the process scheme of the mixed nitride uranium-plutonium SNF processing module (the project “PRORIV”) two liquid chromatography units are included. The first one is designed to purify uranium-plutonium extract from the fission products, and the second one is for the purification of uranium extract from technetium and plutonium. In order to maximize the adequacy of the CODE-TP calculations, experimental verification of the simulating algorithms for the technological process of the uranium extract fine purification from technetium using lab-scale liquid chromatography unit at JSC VNIINM was carried out.

Liquid chromatography (LC) process is proposed as an alternative to washing operations in the extraction technology of spent nuclear fuel reprocessing (PUREX-process). In conventional PUREX-process all mass-transfer interactions are carried out using equipment that provides mixing of a large volume of aqueous solutions, which subsequently become a liquid radioactive waste (LRW). The advantage of the LC process is the possibility to increase significantly aqueous solution/ extractant ratio and as a result get LRW volume decreasing [2].

The mathematical model of the uranium extract purification process from technetium is a cell model, where the component transfer in the flow is calculated for each cell.

To verify mathematical model using experimental data of extracts purification process, a test program was developed. Experiments were performed in continuous extract purification mode with periodic columns regeneration.

2. DEVELOPMENT OF THE EXPERIMENTAL PROGRAM FOR URANIUM PURIFICATION USING LIQUID CHROMATOGRAPHY (LC)

For the SNF reprocessing technology, the LC process was revised and worked out as shown on Fig.1 [3]. The mobile phase is flowing in an intergranular space of a column package and the stationary aqueous phase is impregnated to porous grains that provides a large interface area for the effective mass-transfer (back extraction). The mobile phase is uranium extract and the stationary phase is a solution of diformylhydrazine (DFG) that has fast kinetics of Tc (VII) reduction in nitric acid solutions [4-7].

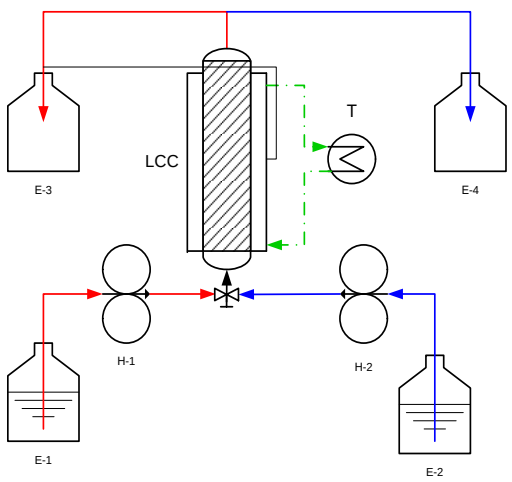

E1 – initial extract tank,
E2 – aqueous solution tank;
E3, E4 – receiving tanks for organic and aqueous solutions respectively;
H1 и H2 – pump dispenser for organic and aqueous solutions respectively;
T – thermostat;
LCC – liquid chromatography column.

FIG. 1. Schematic diagram of the LC unite.

The information model of simulating uranium extract purifying process using liquid chromatography column is presented on Fig. 2.

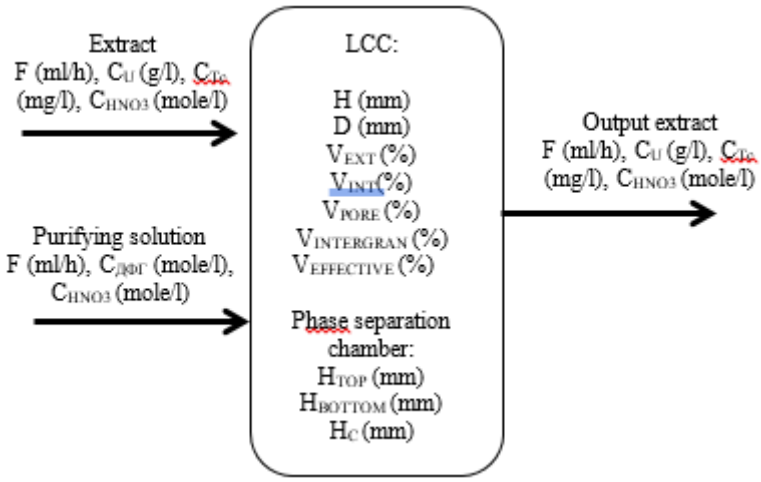

FIG. 2. Information model of a liquid chromatography column.

Since the degree of uranium extract purification from technetium is determined by the presence of technetium in the output extract, in a series of experiments it is necessary to obtain a technetium concentration curve in the output of the column. Controlled parameters of the experiment are presented in Table 1. Four uranium extract purification experiments from technetium were performed. Extract consumption and column packing size were being changed during the tests, selected granular material - SiO_2 Trockenperlen WS.

TABLE 1. TEST PARAMETERS

Initial extract composition	Extract volume	Column package fraction	Flow rate
[U] = 25 g/l; [Tc] = 20 mg/l; [HNO3] = 0,04 mole/l	1,5 ÷ 3 l	0,4 ÷ 0,7 1,2 ÷ 2,0 mm	250 - 500 ml/h

It should be noted that according to the technological principles of the uranium extract purification process the expected purification degree will be higher with less flow rate and smaller size of package particles.

3. METHODOLOGY OF THE EXPERIMENT

The volume of the column package was 80 ml, the internal diameter - 17 mm. The temperature of the reaction zone of the column was 40 °C throughout the experiment. The flow rate of the solutions was controlled by Masterflex peristaltic pumps. The sampling of the purified extract was carried out once per hour.

Tc analysis in samples was performed spectrometrically with liquid scintillator. Concentration of uranium and nitric acid was determined by potentiometric titration with Mettler Toledo autotitrator.

For the effective impregnation into the pore space of the SiO_2 the column was fed by reduction aqueous phase 1 day before the test. Immediately before the start of the process another 2 column volumes of the reduction solution were pumped through the column. The composition of the aqueous reduction solution was - [DFG] = 1 mole/l, [HNO3] = 0,2 mole/l. The composition of the solution to remove precipitate of the reduced technetium that can form in the column was: $[H_2O_2]$ = 0,5 mole/l, $[HNO_3]$ = 1 mole/l.

4. RESULTS AND DISCUSSION

Samples of the purified extract were taken from the output of the LCC in each experiment and concentrations of uranium, technetium, and nitric acid were determined. The time dependences of the technetium were obtained (Figs 3 and 4).

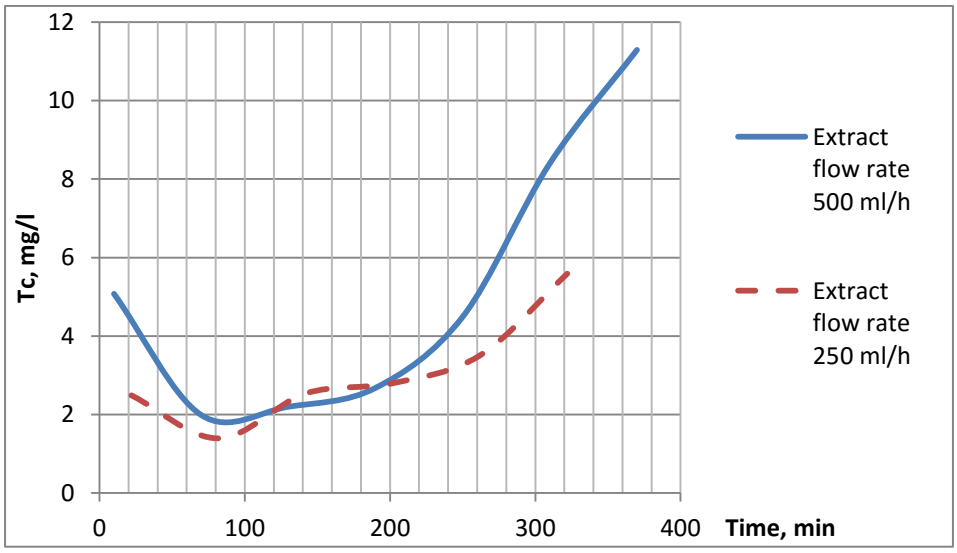

FIG. 3. Concentration curves of technetium depending on the extract flow rate, the particle size of the SiO_2 1,2 – 2,0 mm.

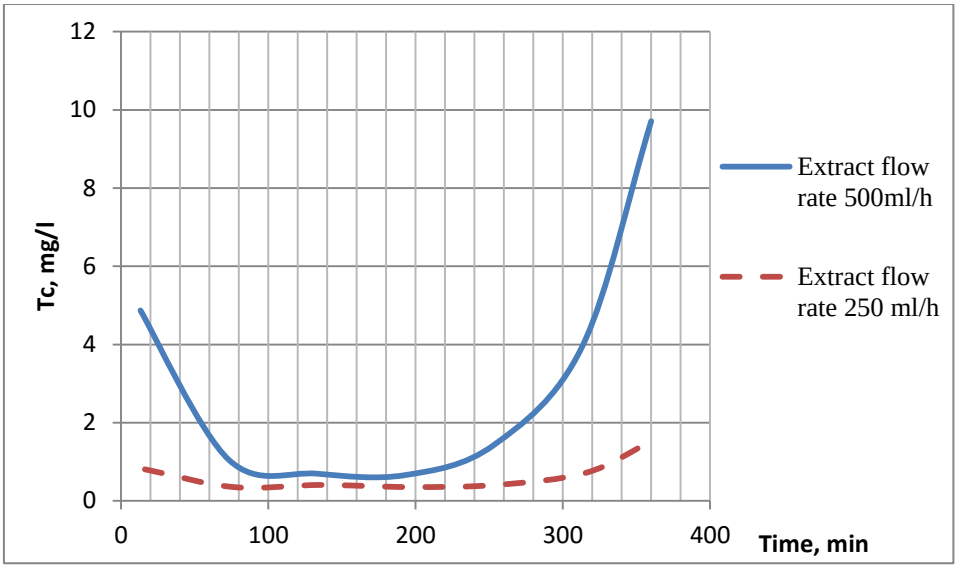

FIG. 4. Concentration curves of technetium depending on the extract flow rate, the particle size of the SiO2 0,4 – 0,7 mm.

According to presented dependences it could be concluded that, as expected, better uranium extract purification from technetium corresponds with a lower flow rate and smaller size of silica gel particles.

To make calculations the working volume of the column was divided into a finite number of cells with equal volume and the input solution of the current cell was the output solution of the previous one. The system of equations included all equation systems for each cell of the column.

For each experiment actual data were set in the CODE - TP media (extract composition, extract flow rate, particle size of SiO_2, volume of LCC). Comparison of experimental and calculated data is shown on Figs. 5 and 6.

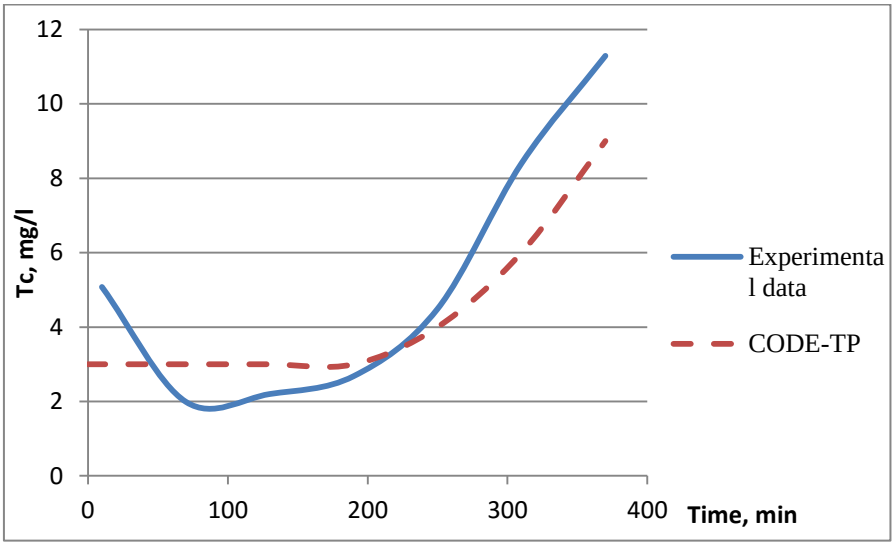

FIG. 5 – Comparison of experimental and calculated technetium concentration curves (extract flow rate -500 ml/h, SiO_2 size - 1,2-2,0 mm).

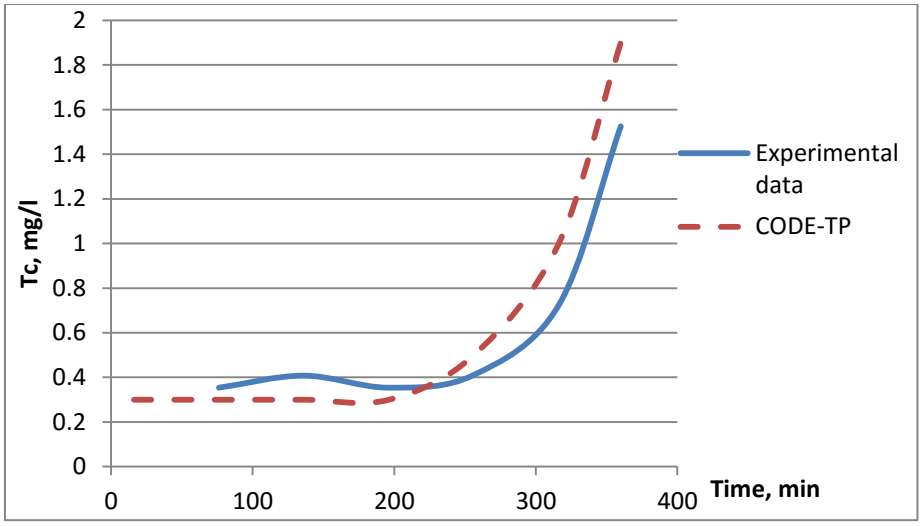

FIG. 6 – Comparison of experimental and calculated technetium concentration curves (extract flow rate -250 ml/h, SiO_2 size - 0,4 - 0,7 mm).

The similar processing was performed for two other experiments. The deviation of calculated data for each experiment is shown in Table 2.

TABLE 2. TEST PARAMETERS AND DEVIATION OF CALCULATED DATA

№	Experiment parameters		Technetium deviation, %
	Extract flow rate, ml/h	Size of SiO_2, mm	
1	500	1,2 - 2,0	8,7
2	250	0,4 - 0,7	5,3
3	500	0,4 - 0,7	4,0
4	250	1,2 - 2,0	6,2

The maximum deviation of the process data calculated by the mathematical model is 8,7 % and it is within the acceptable limits. Therefore, this mathematical model can be considered as adequate to develop modelling of a process control system for uranium extract purifying from technetium using liquid chromatography column.

5. CONCLUSION

A series of experiments was carried out using the LC unite at JSC VNIINM. According to the developed program of experiments, experimental data was obtained and processed.

Liquid chromatography test mathematical model was developed in the simulation CODE - TP media. The calculated data is in good agreement with the experimental data (the deviation is less than 9%). Therefore, the model of uranium extract purification process using liquid chromatography column is adequate and can be recommended for further developing.

REFERENCES

[1] CHURSIN, Y. A., EFREMOV, E. V., GOZHIMOV, A. I., KABRYSHEVA, O. P., BARKOV, D. E. “Computer model of the evaporator and its sensors” Chemical engineering transactions. – 2017. – Vol. 61. – P. 1435–1440.

[2] L.N. PODREZOVA, V.I. VOLK, K.N. DVOEGLAZOV, S.N. VESELOV. “Development of the liquid chromatography process for the spent nuclear fuel reprocessing technology.” J Radiation and Applications. Vol. 2, Issue 3, 2017, pp. 164 – 168.

[3] V.I. VOLK, K.N. DVOEGLAZOV, V.L. VIDANOV, A.A. TRETYAKOV, L.N. SERGEEVA ET AL. “The mass transfer method in the system of two immiscible liquids and device for the implementing”, Patent RF № 2454270, June 2012.

[4] VOLK V., PAVLYUKEVICH E., DVOYEGLAZOV K., PODREZOVA L., VESELOV S. “Investigation of diformylhydrazine interaction with Pu in technological media of extraction SNF reprocessing” in Proc Actinides - 2013, Karlsruhe, Germany, 2013, pp. 1-72.

[5] K.N. DVOEGLAZOV, V.I. VOLK, V.N. ALEKSEENKO, L.N. PODREZOVA, ET AL., “Study of Pu(IV) reduction by hydrazine derivatives” in Proc. Atalante 2012, Montpellier, France, 2012.

[6] V. N. ALEKSEENKO, K. N. DVOEGLAZOV, V. I. MARCHENKO, S. N. ALEKSEENKO, V. I. VOLK, L. N. PODREZOVA, “Reduction of Pu(IV) by carbohydrazide in aqueous solutions and in two-phase systems with tributyl phosphate,” J. Radioanalytical and nuclear chemistry, Vol. 304, pp.201-206, Jan. 2015.

[7] L.N. PODREZOVA, K.N. DVOEGLAZOV, V.I. VOLK. “Base kinetic parameters of the Pu(IV) reduction process by diformylhydrazine” in PAST “Materials technology and new materials” series. 2018. ED. 2(93). P.75-81.