CERNAVODA NPP - MANAGEMENT OF SPENT FUEL

GHEORGHE MARIUS CHIREA
Cernavoda NPP
Cernavoda, Romania
Email: mchirea@cne.ro

Abstract

The nuclear policy of Romania encompasses the development and use of nuclear energy and other nuclear fuel cycle activities, as well as oversight of the development and enforcement of nuclear legislation and regulations to ensure that all nuclear activities are strictly regulated and controlled to the highest standards to ensure public health and safety.

Romania has only one nuclear power plant, Cernavoda NPP, with two units in operation. Cernavoda NPP Units 1 and 2 cover approximately 18% of Romania's total energy production. The Government has plans to further increase nuclear generating capacity through the commissioning of Units 3 and 4 of the Cernavoda NPP.

The dry storage facility will consist of 27 seismically qualified MACSTOR 200 modules. At present 9 modules are built and in operation. The spent fuel from both operating units will be stored in the MACSTOR 200 modules for minimum 50 years. After this interval the fuel will be transfered to a future disposal facility, whose location and design is not currently decided.

1. INTRODUCTION

Romania has only one nuclear power plant, Cernavoda NPP, with two units in operation using CANDU 6 reactors. Cernavoda NPP Units 1 and 2 cover approximately 18% of Romania's total energy production. The Government has plans to further increase nuclear generating capacity through the commissioning of Units 3 and 4 of the Cernavoda NPP.

The CANDU-6 reactor is fuelled with natural uranium fuel that is distributed among 380 fuel channels. Each six-meter-long fuel channel contains 12 fuel bundles. The reactor comprises a stainless steel horizontal cylinder, the calandria vessel, closed at each end by end shields, which support the horizontal fuel channels that span the calandria, and provide personnel shielding. The calandria is housed in and supported by a light water-filled, steel lined concrete structure (the reactor vault) which provides thermal shielding. The calandria contains heavy water (D2O) moderator at low temperature and pressure, reactivity control mechanisms, and 380 fuel channels.

Fuelling machines connect to each fuel channel as necessary on both ends of the reactor to provide on-power refueling which eliminates the need for refuelling outages. The on-power refueling system can also be used to remove a defective fuel bundle in the event that a fuel defect develops. CANDU reactors have systems to identify and locate defective fuel.

The fuel handling system refuels the reactor with new fuel bundles without interruption of normal reactor operation; it is designed to operate at all reactor power levels. The system also provides for the secure handling and temporary storage of new and irradiated fuel.

2. CANDU 6 – FUEL BUNDLE

The nuclear fuel is introduced inside the CANDU 6 reactor in the form of fuel bundles (see Fig. 1) which contain natural U-235.

- Spent Fuel Bundle Characteristics;
- Shape: cylindrical;
- Length: 0,5 m;
- Diameter: 0,1 m;
- Mass: 24 kg;
- Radioactivity: depends on burnup.

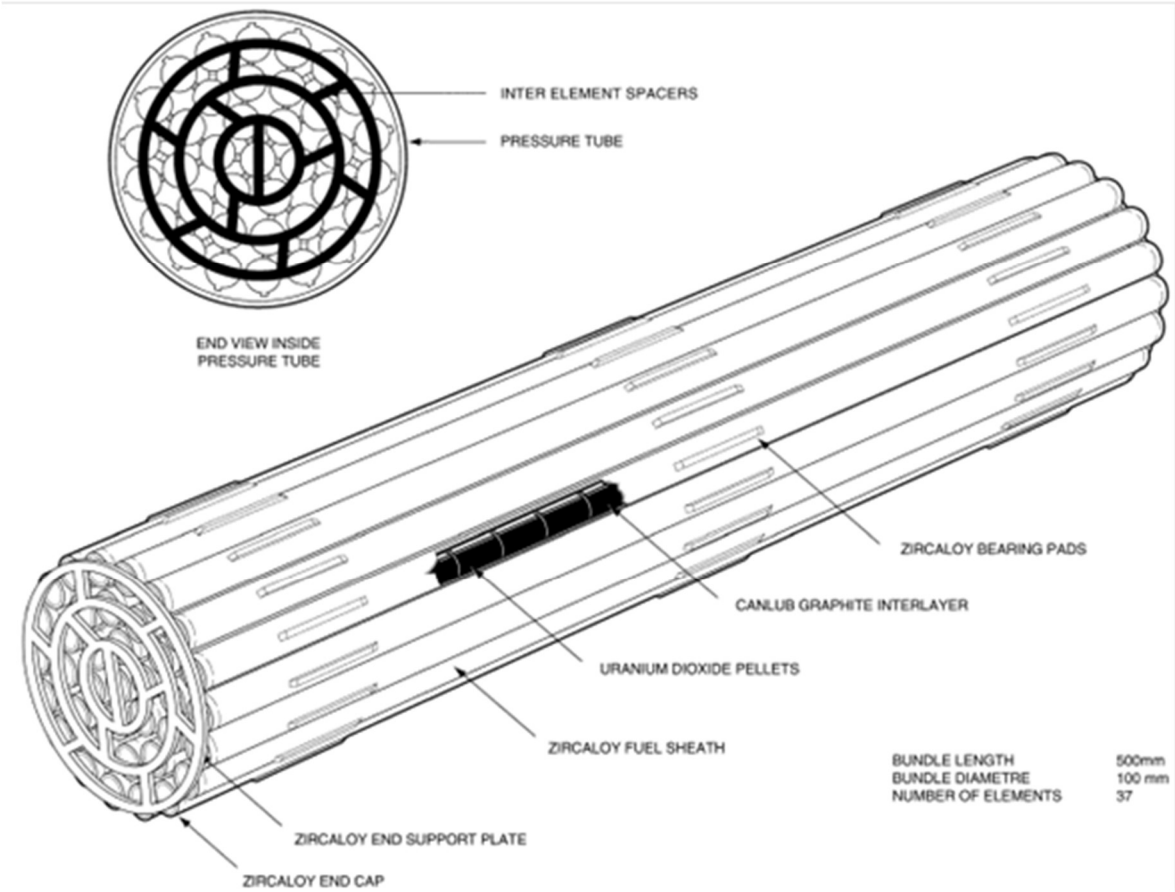

FIG. 1. 37 Element CANDU 6 fuel bundle.

3. FUEL MANAGEMENT POLICY

The two major aspects regarding the fuel management strategy are:

— Safety concerns;
— Production concerns (i.e. energy produced vs. fuel consumption).

Safety concerns:

— One of the main safety concerns is to have as low as possible fuel defects in the core. Increasing fuel defective rate means increasing waste inventory during plant operation;
— Fuel defects minimization can be achieved by good quality of new fuel (manufactured under QA) and optimum operating conditions (well under the safety limits);
— A very few numbers of defective fuel bundles have been discharged from the core during the plant life. Most of the defects occurred during the first two years of operation.

Production concerns:

— From production point of view, the main purpose of the fuel management strategy is to achieve the maximum fuel burnup for the fuel discharged from the reactor core. This means that the channel selection

for fuelling and the fuelling operating procedures are tailored so as to maximize discharged fuel burnup and consequently to minimize fuelling rate;

— Low fuelling rate means low spent fuel inventory;
— Thus, producing as low as possible quantity of spent fuel leads to as low as achievable future waste inventory.

4. WET STORAGE OF SPENT FUEL

Spent fuel (irradiated fuel) is removed from the reactor channels and is transferred to the Spent Fuel Bays where it is stored under water. The water provides shielding from radiation emitted by the fuel and also provides means to remove decay heat, which is given off by the fuel.

Fuel bundles are placed on storage trays (24 fuel bundles/tray) that are stacked one to each other up to 19 trays per stack. Stacks are inspected and sealed by IAEA inspectors (See Fig. 2).

Storage Bays filling rate is about 11,000 bundles/year.

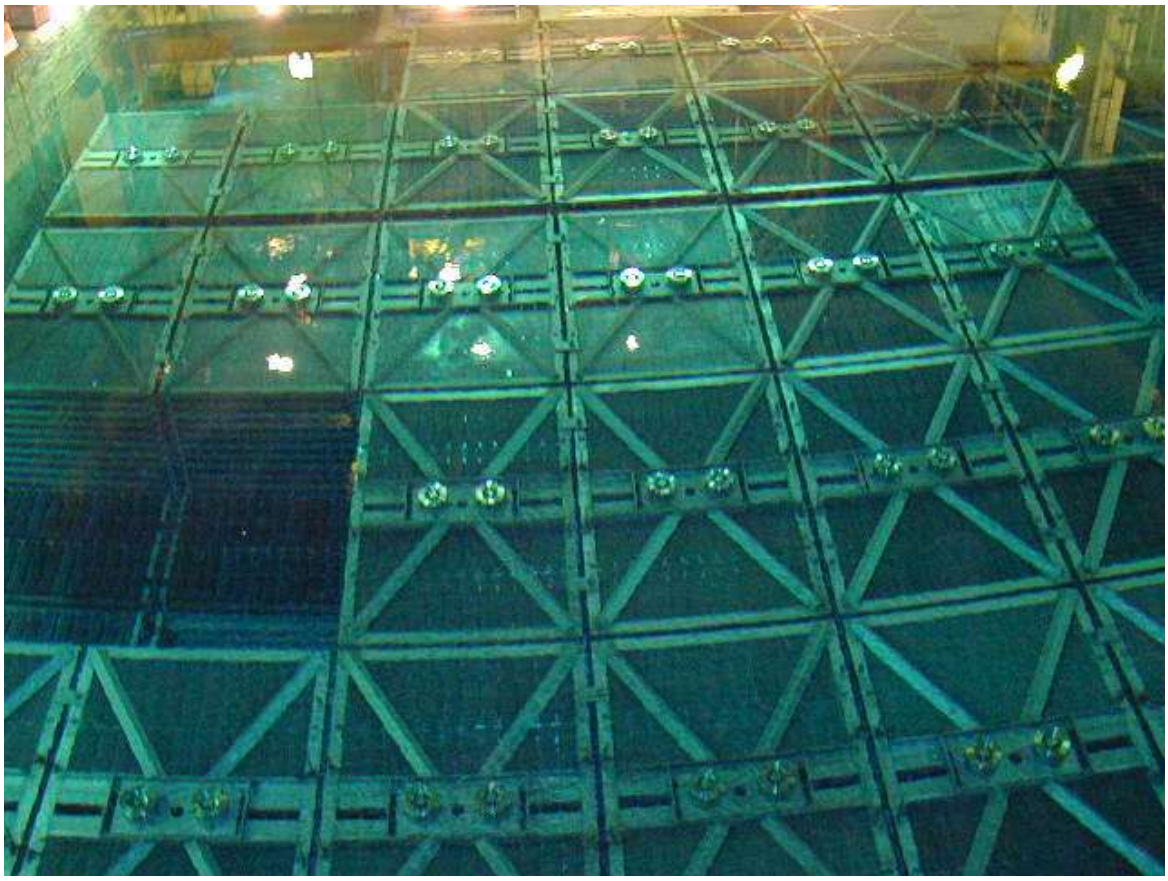

FIG. 2. CANDU 6 Spent fuel storage.

5. INTERMEDIATE DRY SPENT FUEL STORAGE

The Intermediate Dry Spent Fuel Storage Facility for Cernavoda is based on the use of seismically qualified storage MACSTOR 200 modules located above ground in the storage site, and equipment operated at the spent fuel storage bay for preparing the spent fuel for dry storage.

5.1. Fuel preparation

The fuel preparation activities are performed in the main fuel storage bay.

Spent fuel bundles are transferred from trays into fuel baskets that can hold 60 bundles in vertical position. Fuel handling equipment located on the in-bay worktables, assorted tools and lifting equipment are used for this transfer operation (See Fig.3).

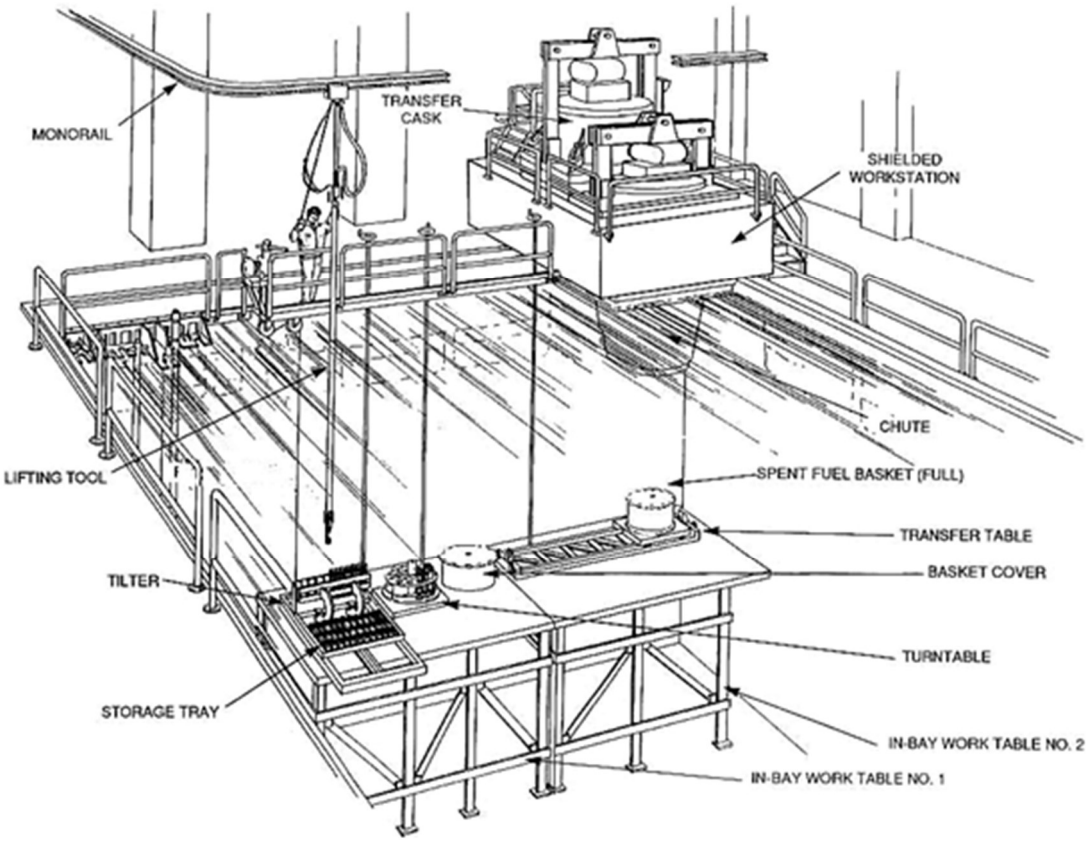

FIG. 3. Cernavoda NPP Fuel Preparation Area.

Once filled, baskets are inspected, moved under the Shielded Work Station (SWS) and lifted out of the storage bay into it.

— Baskets are dried and automatic seal welded.
— Baskets are dried and automatic seal welded inside the Shielded Work Station.
— The transfer Flask pre-positioned over the SWS is used to move the basket out of the SWS.

5.2. Fuel Transfer

The Transfer Flask (see Fig. 4) is transferred by extension crane onto the transporter and after that shipped to storage site.

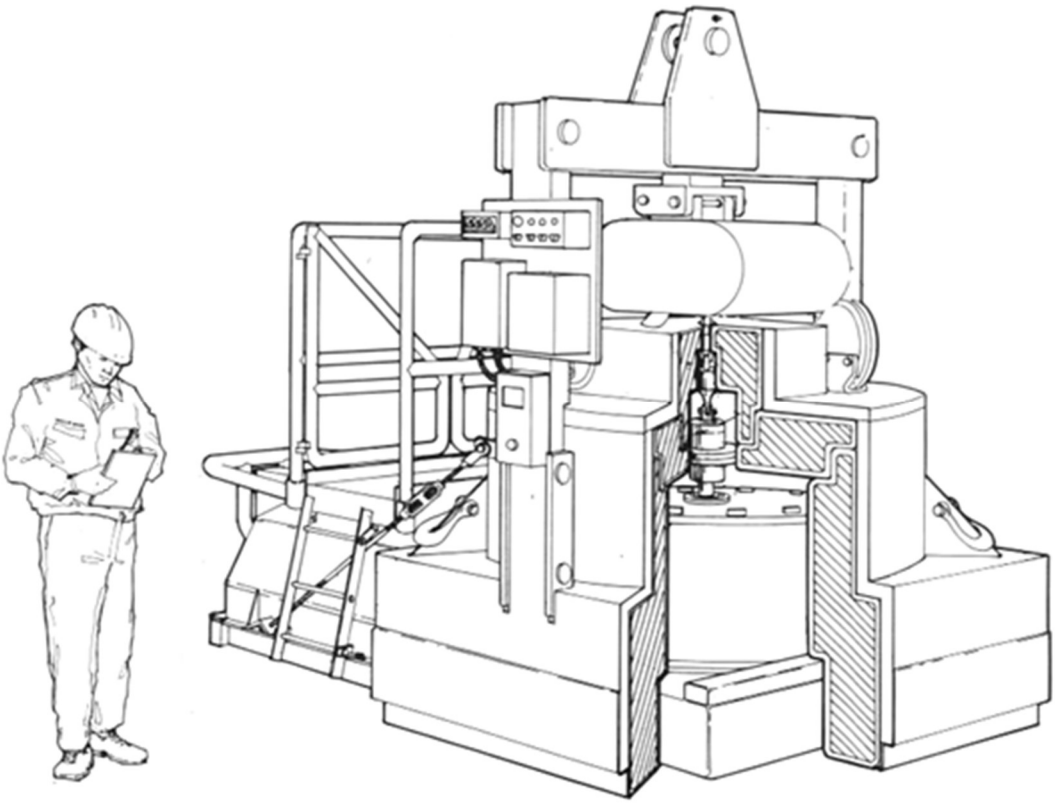

FIG. 4. Cernavoda NPP Fuel Transfer Flask.

5.3. Fuel Storage

The MACSTOR (Modular AirCooled STORage) system was developed by AECL and is designed for storing fuel, which has been previously cooled for a period of minimum six years. Each MACSTOR-200 module is a rectangular structure made of reinforced concrete, which embeds 20 metallic Storage Cylinders positioned vertically (see Fig. 5). Once filled, the cylinder is covered with a reinforced concrete shield plug and a welded metallic cover plate, both of which are seal-welded to the upper flange of the storage cylinder. A set of air inlets and outlets, laid as a labyrinth to reduce radiation streams, provides a path so that the cooling air, driven by its natural buoyancy, enters at the bottom air inlets and exits at the top air outlets. The air circuit is designed for redundancy and diversity, as several interconnected openings on the both sides of the module are available to maintain adequate cooling even if some air paths is blocked.

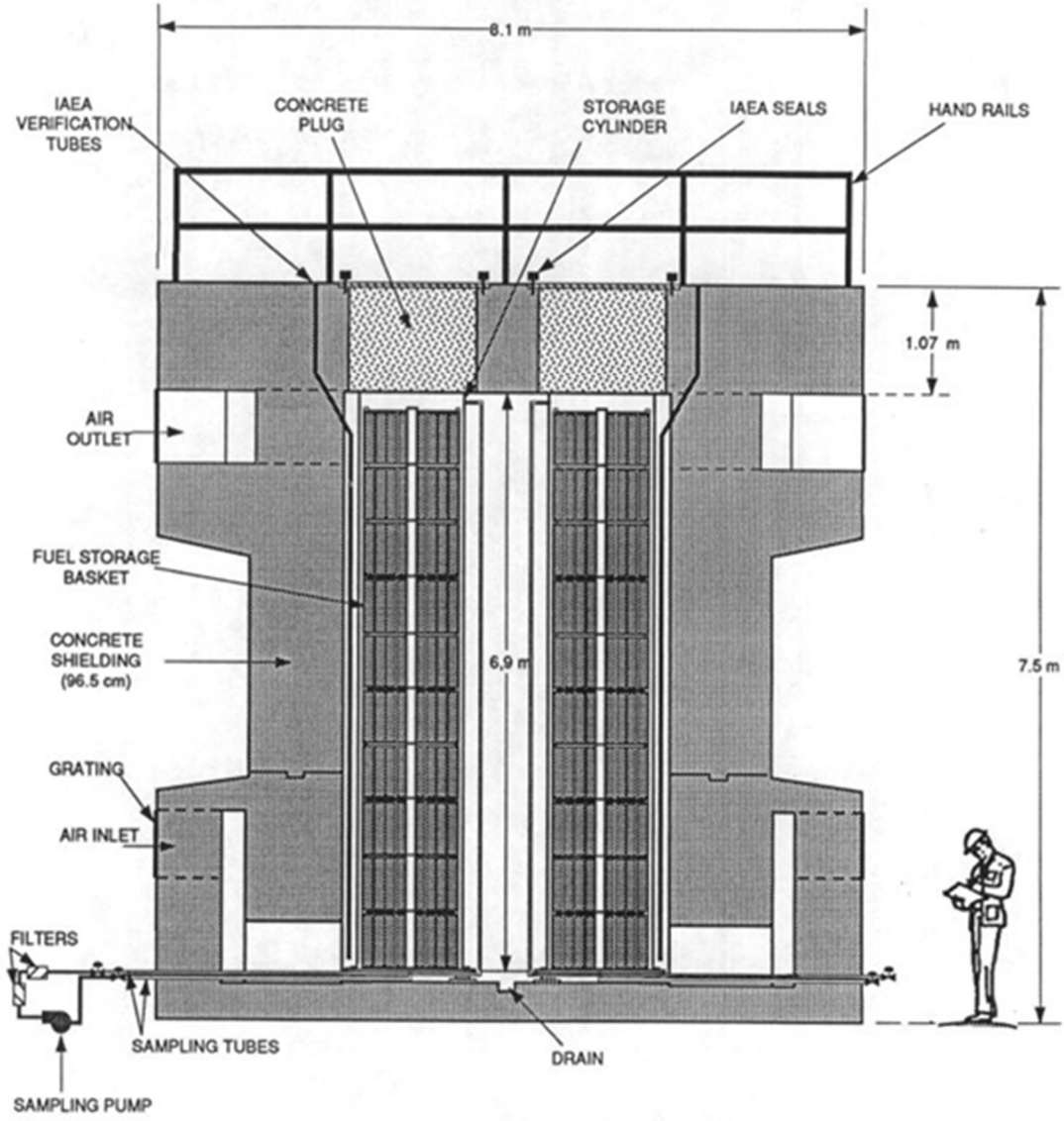

FIG. 5. Cernavoda NPP MACSTOR 200 MODULE.

The MACSTOR design ensures that the containment of fission products is maintained during all phases of the fuel handling operations. The MACSTOR modules are designed for zero release over the entire storage period.

Measures are taken to detect and correct any breach of containment:

— storage cylinder air sampling - the air inside the storage cylinder is circulated and monitored;
— storage site radiation survey - surfaces of the MACSTOR modules, the perimeter fence and the storage area are monitored for radiation;
— testing of surface water collected from the drainage system to monitor any leakage.

6. CONCLUSIONS

The nuclear policy of Romania encompasses the development and use of nuclear energy and other nuclear fuel cycle activities, as well as oversight of the development and enforcement of nuclear legislation and regulations

to ensure that all nuclear activities are strictly regulated and controlled to the highest standards to ensure public health and safety.

At the Cernavoda NPP, after minimum six years storage in the spent fuel bay, the nuclear spent fuel is transferred to the Intermediate Dry Spent Fuel Storage facility that has a designed lifetime of minimum 50 years. The dry storage facility will consist of 27 seismically qualified MACSTOR 200 modules. At present 9 modules are built and in operation. The spent fuel from both operating units will be stored in the MACSTOR 200 modules for minimum 50 years. After this interval the fuel will be transfered to a future disposal facility, whose location and design is not currently decided.

BIBLIOGRAPHY

[1] Fuel Design Manual, 79-37000-DM-000 (1988).

[2] Depozitare Intermediara Combustibil Ars, 1/2-TM(A)-35370-00 (2012).