SPENT FUEL MANAGEMENT- INDIA

J.S. YADAV, K. AGARWAL
Bhabha Atomic Research Centre
Mumbai, India
Email: jsyadav@barc.gov.in

Abstract

India follows closed fuel cycle option for spent fuel management. Wet storage of spent fuel is the predominant mode of storage therefore the discharged fuel from the reactors is stored at the reactor pools which have capacity for ~10 reactor-years of operation. After appropriate cooling, the spent fuel is moved to the storage locations either on or off reactor site depending on the spent fuel management strategy. Transport of the spent fuel is carried out adhering to national and international safety guide lines in "type B" packages. Lower capacity fuel ponds are provided for interim storage of spent fuels at recycling facilities. PUREX process using TBP is employed for reprocessing spent fuel from PHWRs. Spent fuel reprocessing from FBRs and futuristic reactors is demonstrated using TBP based solvent extraction processes. The safe management of radioactive wastes envisages two distinct modes of final disposal in respect of radioactive wastes *viz.* near-surface engineered, extended storage for low and intermediate level radioactive wastes and deep geological disposal for high-level and alpha bearing wastes. HLLW treatment is carried out in waste immobilization plants and interim storage of vitrified HLLW is carried out in solid storage and surveillance facilities. Extensive R&D in partitioning of long-lived actinides and fission products has lead to the development of solvent extraction based process flow-sheets using indigenously synthesized solvents which are deployed at engineering scale. This has resulted in the reduction of waste volume generation and extended time of repository requirements. This has also resulted in the recovery of several useful radionuclides such as ^{137}Cs, ^{90}Sr, ^{106}Ru etc. which are used for societal benefits.

1. INTRODUCTION

India has adopted three-stage nuclear energy program [1] utilising natural uranium as fuel in thermal reactors in the first stage. Plutonium produced from spent fuel reprocessing is recycled in fast breeder reactors in the second stage where thorium is also irradiated as a blanket material to generate in-situ ^{233}U. ^{233}U produced from Th fuel cycle will be used with thorium in the third stage to sustain its power generation. The three-stage nuclear power programme was originally conceptualized by Dr. Homi Jehangir Bhabha, an architect of Indian nuclear power programme, mainly because of the availability of more thorium resources than uranium in the country.

Thus, from Indian perspective, the spent fuel management by recycling is considered to be a superior option. The programme for waste management envisages disposal of low and intermediate level radioactive waste in near surface disposal facilities and reduction in radio toxicity from high level and α-bearing wastes. Waste Immobilization Plants (WIPs), employing metallic melters for vitrification of HLLW are operational in the country. SSSFs are set up for interim storage of vitrified waste. Investigations are in progress for selecting site for ultimate disposal in igneous rock formations. Extensive R&D studies on partitioning of actinides from HLLW have resulted in the development of process flow-sheets which are deployed at engineering scale employing indigenously synthesized solvents. Emphasis is given for the recovery of useful and heat generating radionuclides such as ^{137}Cs and ^{90}Sr. Thus the spent fuel in India is considered as a valuable resource.

2. SPENT FUEL GENERATION IN INDIA

Currently, India has 17 operating PHWRs, 2 BWRs and 2 LWRs at various locations. Further, 6 PHWRs of 700 MW_e are under construction stage and 10 more are in the planning stage. The operating reactors in the country are given below in Table 1.

TABLE 1. OPERATING REACTORS IN INDIA

Reactor	Type	Capacity (MW_e)
TAPS 1&2	BWR	2×160

TAPS 3&4	PHWR	2×540
RAPS 1&2	PHWR	100&200
RAPS 3-6	PHWR	4×220
MAPS 1&2	PHWR	2× 220
NAPS 1&2	PHWR	2×220
KAPS 1&2	PHWR	2×220
KGS 1-4	PHWR	4×220
KKNPP 1&2	VVER	2×1000

Under Fast Breeder Reactor (FBR) technology development programme, a 40 MW_{th} Fast Breeder Test Reactor (FBTR) which was commissioned in October 1985 is operational at Kalpakkam. Experience gained from FBTR in handling the high burn up fuel has helped in designing 500 MW_e Prototype Fast Breeder Reactor (PFBR) which is in advanced stage of commissioning. In addition to PHWRs and FBRs, two 1000MW_e Light Water reactors (LWRs) are in operation at Kudankulam, Tamil Nadu. Additional two such LWRs are under construction. With planned expansion of nuclear power, a challenge for spent fuel management also is being addressed. Various steps for the management of spent fuel in India are as follows-

— Spent fuel storage and its transportation
— Wet Reprocessing- by PUREX flow-sheet
— Spent fuel from PHWR
— Spent fuel from FBR
— Management of LLW, ILW and HLLW
— Partitioning of actinides from HLLW
— Recovery of useful radionuclide for societal applications.

3. SPENT FUEL STORAGE AND ITS TRANSPORTATION

The spent fuel storage facilities are designed, constructed and operated by following the international standards and safety guidelines. The spent fuels from the reactors are stored initially at the reactor pool. Since natural uranium is used as fuel in PHWRs, no specific configuration is required for fuel storage. The spent fuel from LWRs is stored in racks made of special stainless steel. The spent fuel is kept in the storage locations either at reactor site or away from the reactor site depending on the management strategy. In rectors under safeguard, the spent fuel is stored in reactor pools in compliance with the IAEA guidelines. Storage capacities at reactor site generally cater to store spent fuel for nearly 10 reactor-years of operation in case of PHWR fuels whereas it is about 5–7 years for LWRs. Dry storage of spent fuel is also adopted but to a much lesser extent.

Transport of the spent fuel to the storage locations are carried out adhering to IAEA safety guide lines following three lines of defense *viz.* the transport reliability, concept of a package and the efficacy of resources to deal with an accident. Spent fuel transport is carried out in "type B" packages, designed to withstand severe accident conditions, simulated by tests, validated by approval certificates and subject to inspection. During transportation, security and safety issues are given top most priority wherein physical security of nuclear materials from thefts, diversion etc. are covered besides exposure, contamination, criticality and environment related issues.

4. MANAGEMENT OF DAMAGED AND PREMATURE SPENT FUEL

Depending upon the degree of damage, such fuel elements are given special treatment. Fuel bundles are encapsulated safely and transported to the storage pool along with normal spent fuel for reprocessing or subjected to dry storage in special casks. The damaged fuel bundles are subjected to post irradiation examination by visual and using several non-destructive examinations *viz.* ultrasonic testing, eddy current testing, gamma scanning and neutron radiography for root cause analysis. Subsequently corrective measures are studied and implemented to minimize such damages to the fuels. Premature fuel is managed as normal spent fuel by reprocessing in special campaigns.

5. REPROCESSING

PUREX process has been the main workhorse of spent fuel reprocessing for the last several decades. The process utilizes 30% TBP in n-dodecane as solvent to extract uranium and plutonium from dissolved feed solution retaining bulk of fission products in the raffinate phase. Main steps involved are given below-

— Head-end treatment involving mechanical chopping of the spent fuel followed by dissolution in nitric acid;
— Feed clarification and conditioning of the feed solution for solvent extraction;
— Co-decontamination involving extraction of uranium and plutonium leaving bulk of the fission products;
— In the raffinate phase;
  - Washing/scrubbing of organic stream with nitric acid;
  - Reductive partitioning of plutonium from uranium using uranous nitrate solution;
  - Purification of uranium and plutonium streams;
  - Conversion of Pu as PuO_2 via oxalate route and uranium as U_3O_8 via ADU route;
  - Solvent wash and its recycle;
  - Waste management.

In spite of numerous advantages, TBP is found to have certain disadvantages like higher aqueous phase solubility, formation of harmful degradation products like dibutyl phosphate, third phase formation in presence of higher concentration of tetravalent metal ions *viz.* Pu^{4+}, Th^{4+} and Zr^{4+}, non-incinerable nature and waste management issues. Based on extensive laboratory scale studies a C, H, O and N based monoamide *viz.* dihexyl octanamide was proposed and investigated under simulated feed conditions [2,3]. Extraction and stripping beheviour is found almost similar to that of TBP under identical conditions. However, it is not yet fully established for reprocessing applications using real feed solutions. Behaviour of aqueous soluble degradation product is yet to be studied. It is also noted that hydrodynamic parameters like viscosity, frothing nature etc. are also not found to be very favorable.

Even though higher homologues of TBP such as tri-n-hexyl phosphate, tri amyl and tri-iso-amyl phosphate are extensively studied [4,5] at IGCAR for processing spent fuel from fast breeder reactors, so far only TBP is deployed for reprocessing technology in India. As of now it is a challenge for any other solvent that can replace TBP in PUREX technology.

Though India has mastered the reprocessing technology to meet the present day requirements and future challenges, the technology is constantly being improved. Several developmental activities are being pursued to enhance the process performance. Some of the areas where R&D is being continuously pursued are:

— Improvements in the recoveries of U and Pu;
— Improved decontamination factors for U and Pu with respect to fission products;
— Improvements in partitioning techniques;
— Reduction in waste volume generation;
— Reduction in number of cycles;
— Use of non-proliferation route following co-processing and co-conversion;
— Partitioning of useful actinide and fission products for societal application.

6. WASTE MANAGEMENT

India considers HLLW as a resource rather than waste. Separation and purification of several radionuclides from HLLW is being explored for various societal applications. Solvent extraction based engineering facilities have been deployed to partition the waste for separation of active components like U, ^{137}Cs, ^{90}Sr and An-Ln using indigenously synthesized organic solvents *viz.* TBP, calix crown and TEHDGA in three cycles.

Cycle I: In this cycle, Sulphate Bearing High Level Liquid Waste (SB-HLLW) is first contacted with 30% TBP for recovery of uranium and plutonium. The stripped product i.e. U-rich solution from this cycle is sent back to the reprocessing plant for reuse. The lean organic is recycled.

Cycle II: After adjustment of feed acidity, the raffinate from first cycle is contacted with cesium selective calix crown 6 (CC6) solutions to extract Cs. Cs loaded in the organic phase is back extracted with water. The aqueous phase containing ^{137}Cs is concentrated and used to make vitrified glass pencils. Over 300,000 Ci of radio Cs has been recovered successfully so far from HLLW and used for vitrified glass pencils having specific activity of 2-5Ci/g. The vitrified pencils are supplied to BRIT, India which are being deployed for blood irradiation applications. Photograph of a typical vitrified Cs pencil is given in Fig. 1.

FIG. 1. Typical Vitrified Cs Glass Pencil

Cycle III: The raffinate from the second cycle i.e. Cs and U lean HLLW is subjected to solvent extraction using TEHDGA, for separation/recovery of Sr and actinides. The stripped product from this cycle is predominantly rich in ^{90}Sr and contains actinides and lanthanides. This aqueous phase is concentrated and subsequently used as source of radio-strontium/vitrified.

The final raffinate generated from third cycle is subjected to interim storage to allow decay of short lived radio-nuclides if any and is further processed as low level waste prior to its discharge meeting the regulatory requirements. Process flow scheme deployed for the treatment of SB-HLLW at Trombay is shown in Fig. 2.

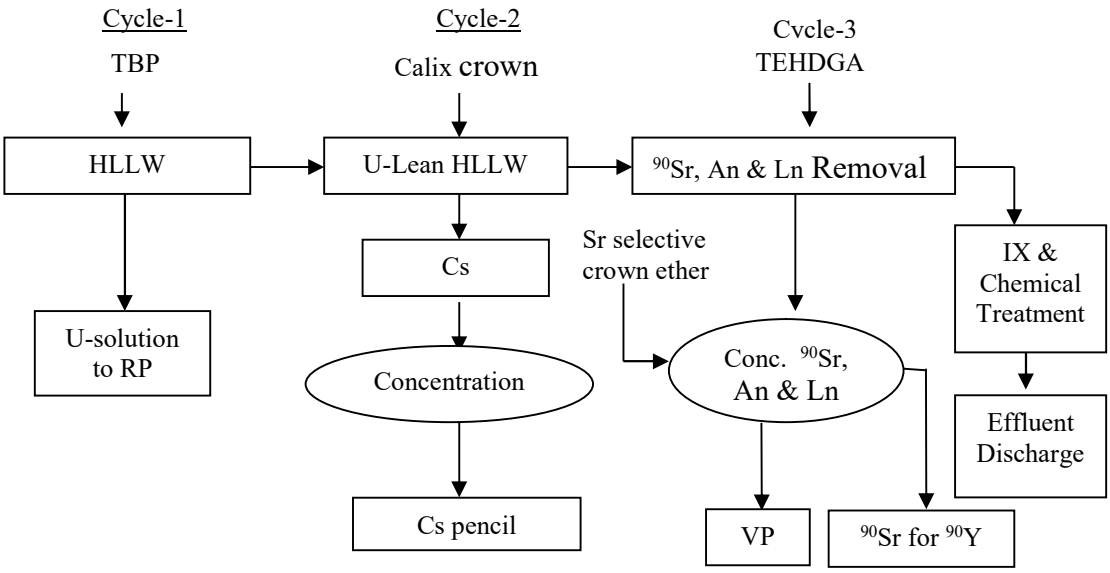

FIG. 2. Management of HLLW by Solvent Extraction Route

The solvent extraction technology thus adopted for management of HLLW has significantly reduced the waste volumes in terms of vitrified mass and has extended the period for repository requirements.

7. SEPARATION OF ^{90}Sr FOR GENERATION OF CARRIER-FREE ^{90}Y FOR THERAPEUTIC APPLICATIONS

For achieving radiopharmaceuticals grade purity of ^{90}Sr, multi step separation process involving solvent extraction, ion exchange, extraction chromatography, precipitation and membrane based techniques are

deployed. ^{90}Sr rich stream generated from third cycle is used as feed. Sr-selective crown ether, di-(t-butyl cyclohexano)-18-Crown-6, is being synthesized and will be deployed for large scale separation of ^{90}Sr. A two-stage SLM based generator system [6] (Fig. 3) is used for the separation of carrier free ^{90}Y which is principally based on the solvent extraction properties of two ligands, namely 2-ethylhexyl 2-ethylhexyl phosphonic acid (KSM-17) and octyl phenyl-N,N-diisobutylcarbamoyl methyl phosphine oxide (CMPO) under optimum conditions.

The carrier-free ^{90}Y acetate product lots having specific activity in the range 30-40Ci/L are supplied for Radiopharmaceutical application. To meet the higher ^{90}Y activity demand multiple such generator systems are under consideration.

Stage-1 Stage-2

FIG.3. SLM based two stages for generation of carrier-free ^{90}Y

8. PARTITIONING OF ACTINIDES FROM PHWR-HLLW

An Actinide Separation Demonstration Facility was set up at Tarapur for the partitioning of actinides from PHWR-HLLW [7]. Block diagram of the integrated facilities is given in **Fig. 4**. In this facility, residual U and Pu are separated from the waste using PUREX solvent in first step. In the second step, actinides and lanthanides are partitioned from the waste using TEHDGA based solvent extraction process. Separation of actinides from lanthanides is proposed to be carried out using D2EHPA based process as adopted in TALSPEAK process [8] in the third step.

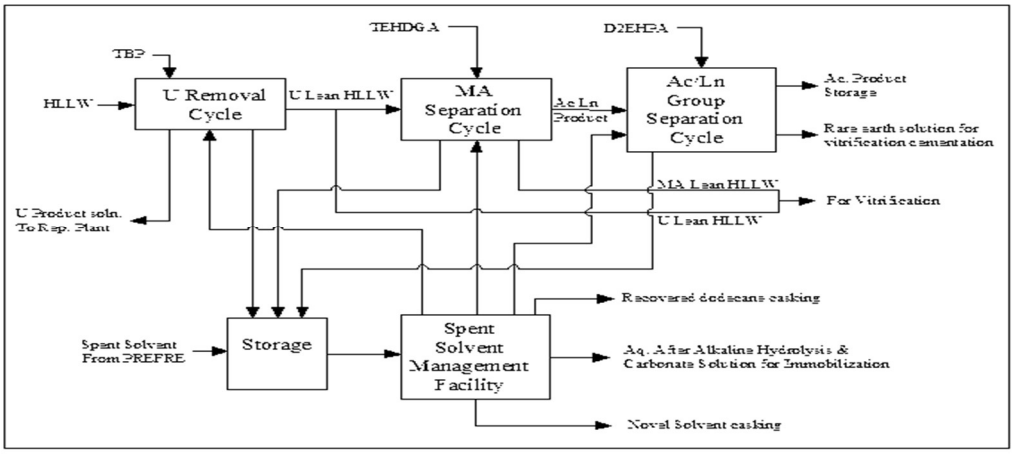

FIG. 4. Block diagram of the integrated facility for actinide partitioning

9. CONCLUSIONS

India has been mainly operating PHWR type nuclear reactors for power generation. The country has mastered in design, construction and maintenance of wet storage facilities for spent fuel meeting international safety norms. Country has also gained the experience in the design of dry storage facilities. Transportation of

spent fuel from various reactors to reprocessing sites has been carried out safely following the safety requirements followed internationally. Reprocessing is carried out adopting PUREX process. High level liquid is mainly considered as resource and hence several useful radionuclides are being recovered for societal benefits. Indigenously synthesized solvents have been used for the management of HLLW. This technology has resulted in the reduction of waste volume and extended time of repository requirements. This has also resulted in the recovery of several useful radionuclides such as ^{137}Cs, ^{90}Sr, ^{90}Y, ^{106}Ru etc. which are of societal benefits. As regards to ultimate disposal, the Indian choice is focused on igneous rock formations for which evaluation of sites for repository is in progress.

ACKNOWLEDGEMENTS

Authors acknowledge Dr. P. S Dhami, FRD, NRG, BARC for the help rendered during the preparation of this manuscript.

REFERENCES

[1] BHABHA H. J. AND PRASAD N.B., "A study of the contribution of Atomic Energy to a Power programme in India", Proc. 2nd Int. Conf. on peaceful uses of Atomic Energy, Geneva, 1958.

[2] MANCHANDA V.K., RUIKAR P.B., SRIRAM S., NAGAR M.S., GUPTA K.K., SINGH R.K., CHITNIS R.R., DHAMI P.S., RAMANUJAM A., Distribution behaviour of U(IV), Pu(IV), Am(III) and Zr(IV) with N,N-Dihexyl Octanamide under Uranium Loading Conditions", Nucl.Technol.**134** 3,(2001)231–240.

[3] MANCHANDA V,. PATHAK P.N., Amides and Diamides as Promising Extractants in the Back End of the Nuclear Fuel Cycle: An Overview, Sep. and Purification Technol. **35** 2 (2004) 85–103

[4] Natrajan, R., and Raj, B., Fast Reactor Fuel Reprocessing Technology in India, J. of Nucl. Sci. and Technol., **44** 3, (2007) 393–397.

[5] SURESH A., BRAHMANANDA RAO C.V.S., SRINIVASULU B., SREENIVASAN N.L., SUBRAMANIAM S., SABHARWAL K.N., SIVARAMAN N., SRINIVASAN T.G., NATARAJAN R. AND VASUDEVA RAO, P.R., Development of alternate extractants for separation of actinides, Energy Procedia, **39** (2013)120–126

[6] DHAMI P.S., NAIK P.W., DUDWADKAR N.L., KANNAN R., ACHUTHAN P.V., DAKSHINAMOORTHY A., JAMBUNATHAN U., MUNSHI S.K., DEY P.K., USHA, P., AND MEERA, V., Studies on the Development of a Two Stage SLM System for the Separation of Carrier-free ^{90}Y using KSM-17 and CMPO as Carriers", Sep. Sci. Technol. **42** (2007) 1107–1121.

[7] SMITHA, M., PATEL V.P., DANI U., VENUGOPAL M.R. AND WATTAL P.K., Engineering Scale Demonstration Facility for Actinide Partitioning of High Level Waste, Issue no. 332, BARC Newsletter, India, 2013.

[8] NILSSON, M. AND NASH, K.L.,"TALSPEAK Chemistry in Advanced Nuclear Fuel Cycles", ATALANTE, Montpellier, France (2008).