VALIDATION OF THE WWER TYPE SPENT FUEL TRANSPORTCASK SHIELDING MODEL

S. A. BZNUNI, A. AMIRJANYAN
Nuclear and Radiation Safety Center
Yerevan, Armenia
Email: s.bznuni@nrsc.am

Abstract

In 2009, Armenian NPP switched to the fuel assemblies with higher initial enrichment that allowed them to reach higher discharge burnups. However, higher burnup that implies bigger decay heat and neutron/gamma irradiation doses requires substantial increase of precooling time in spent fuel pools to meet ANPP NUHOMS type horizontal dry spent fuel storage design acceptance criteria. This may lead to possible issue of availability of enough free cells in spent fuel pools in case of emergency full core unloading. To tackle this issue ANPP decided to estimate additional dose burden during loading and transport on spent fuel in transport casks and storage of them in dry spent fuel storage in case of relatively shorter precooling time satisfying design acceptance criteria on decay heat. For this purpose spent fuel transport cask model was developed by MCNP 6 program. Neutron and gamma source intensities and spectra were calculated by ORIGEN program from SCALE 6 package. Developed model was validated based on irradiation dose measurement results of several spent fuel transport cask loadings.

1. INTRODUCTION

Accurate assessment of the of neutron and gamma dose rates around a spent fuel transport cask is one of the key elements of the analysis for the safety of the cask and the adequacy of its shielding design. Introduction of the fuel assemblies with higher enrichment and increasing spent fuel discharge burnup lead almost doubling of precooling time of spent fuel assemblies in ANPP spent fuel pools to meet both decay heat design acceptance criterion and gamma, neutron irradiation dose rates. However, doubling of pre-cooling time could introduce difficulties in spent fuel management. So, it is important to evaluate increase of dose rates in shorter precooling time allowing satisfaction of spent fuel cask decay heat design acceptance criterion. This paper devoted to the preliminary results of the validation of spent fuel transport cask shielding model loaded with fuel assemblies with higher burnup.

2. ELEMENTS OF TRANSPORT CASK DESIGN

The transfer cask is designed for on-site transfer of the Dry Shielded Canister (DSC) from the plant's fuel pool to the Horizontal Storage Module (HSM). It provides shielding and protection from potential hazards during the DSC closure operations and transfer to the HSM. As shown in Fig. 1, the transfer cask is constructed from two concentric cylindrical steel shells with a bolted top cover plate and a welded bottom end assembly.

The annulus formed by these two shells is filled with cast lead to provide gamma shielding. The transfer cask also includes an outer steel jacket which is filled with water for neutron shielding. The top and bottom end assemblies incorporate a solid neutron shield material. A cover plate is provided to seal the bottom hydraulic ram access penetration of the cask during fuel loading. In radial direction transport casks consist of stainless steel inner liner, lead shield, stainless steel structural shell, outer metal jacket which forms an annulus with cask structural shell. The annulus is filled with water to provide neutron dose attenuation. The transfer cask top and bottom covers are composed of stainless steel cover plate, neutron shielding material, stainless steel top cover plate.

The DSC is a cylindrical pressurized vessel with stainless steel shell in radial direction. The cylindrical shell, as well as the top and bottom cover plate assemblies of DSC form the pressure retaining containment boundary for the spent fuel. The internal basket assembly contains storage position for each fuel assembly.

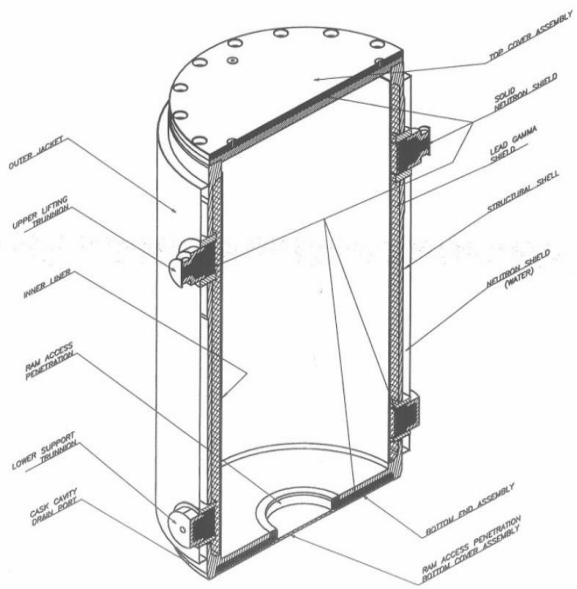

FIG. 1. Transfer Cask Design [1].

Structural support for the fuel and basket guide sleeves in the lateral direction is provided by circular spacer disk plates (see Fig. 2). Axial support for the DSC basket is provided by four support rods which extend over the full length of the DSC cavity.

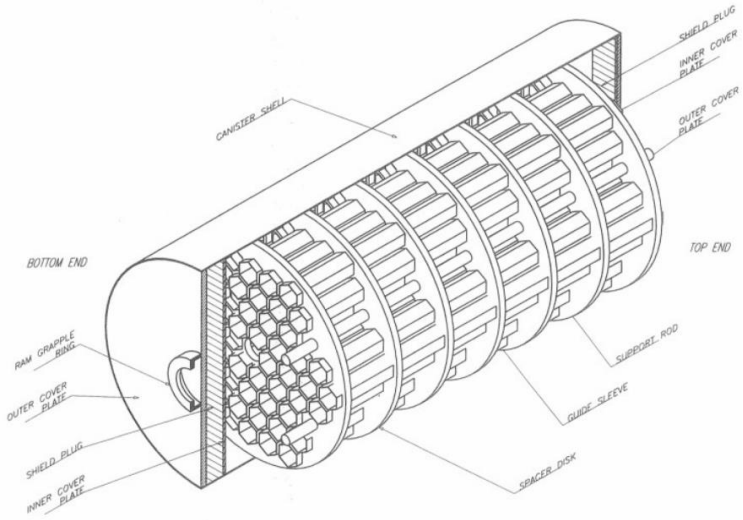

FIG. 2. Dry Shielded Canister Assembly Components [1].

The fuel basket assembly consists of 56 stainless steel guide sleeves, spacer disks and support rods. Several sleeves are made of borated steel to meet criticality safety acceptance criteria. The DSC top end is composed of carbon steel shielding plug, stainless steel inner top cover plate, stainless steel outer top cover plate. The DSC bottom end is composed of stainless steel inner bottom cover plate, carbon steel shielding plug, stainless steel outer bottom cover plate.

3. IRADIATION SOURCES

Neutron and gamma sources are based on ANPP operational data with taking into account axial distribution of the burnup. Axial burnup distributions were taken from ANPP core neutronics reports. Neutron and gamma source intensities and spectra were calculated by ORIGEN-ARP program [2] from SCALE package. Gamma radiation sources include all fission product nuclides within the spent fuel, as well as the principal activation products and actinide elements present in the spent fuel assemblies.

4. MODELING OF THE SPENT FUEL CASK

For modelling of transport of neutrons and gamma particles Monte Carlo method is used. Monte Carlo method applied in MCNP6 [3] allows to use continuous energy model and exactly represent DSC and spend fuel transport cask complex geometry. In the calculations, continuous energy ENDFB-VII.I cross section library was used.

The radial cross-section of the spent fuel transport cask is presented in Fig. 3.

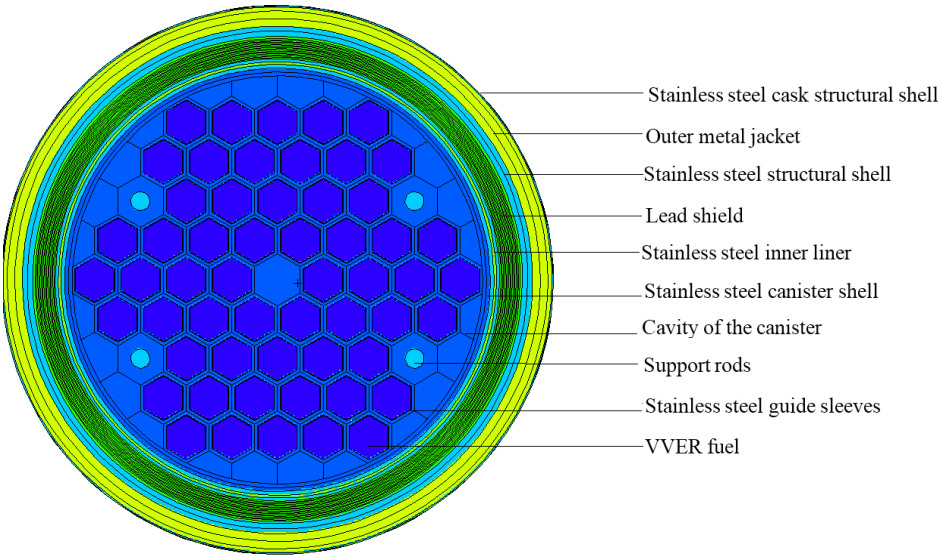

FIG. 3. Radial cross-section of spent fuel transport cask 3D model.

Peripheral fuel assemblies were modelled with taking into account heterogeneous structure, inferior fuel assemblies were modelled by using homogenisation approach.

In the Fig. 4 axial cross-section of the spent fuel transport cask is shown.

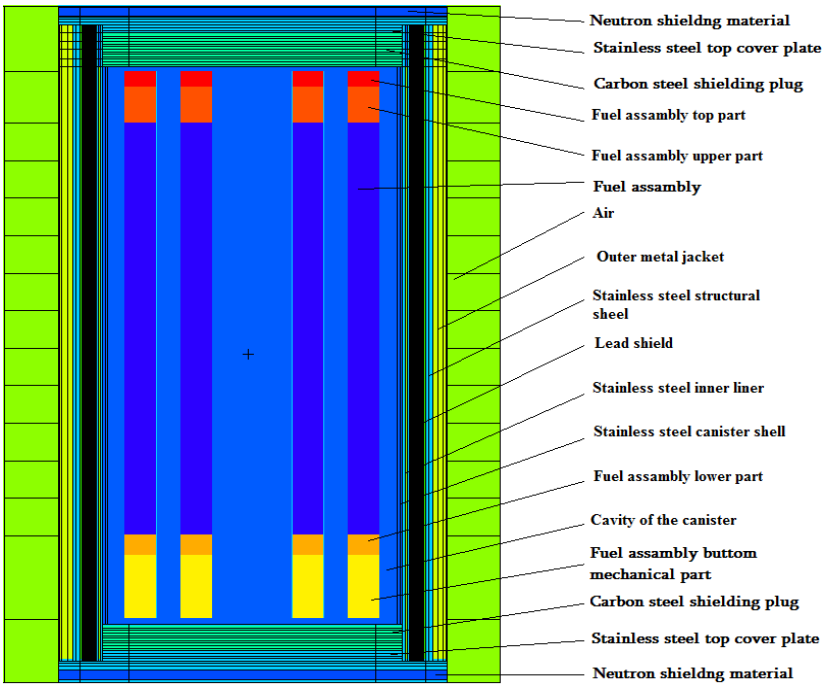

FIG. 4. Axial cross-section of spent fuel transport cask 3D model.

Due to strong attenuation of neutron and gamma particle fluxes between fuel assemblies and outer surface of transport cask, geometrical splitting with Russian Roulette variance reduction methods was used to increase the number of neutrons reaching the outer surface of transport cask and improve the particle tracking efficiency. Particularly, importance values were assigned to each spatial cell such that the cell importance values

increase as the neutrons approach the vessel. When a neutron moved toward the vessel passing from a region of lower importance I to a region of higher importance I_1, it was split into I_1/I neutrons. Conversely, when a neutron moved away from the vessel passing from a region of higher importance I to a region of lower importance I_1, it underwent Russian Roulette with a survival probability of I_1/I. To avoid unphysical processes, restriction on the ratio of importance of the adjacent cells was applied ($I_1/I<4$) as well as radial optical thickness of cells was kept less than 2 mean free paths by dividing cells into sub-cells. Several trial Monte-Carlo runs were carried out to refine importance's of the adjacent cells. ICRP flux to dose conversion coefficients were used in calculations [4].

To ensure that the phase space has been adequately sampled, calculations have converged, and the estimated mean and relative error are valid, results of dose rate calculations were checked against following statistical tests

- the flux mean should not have a significant monotonic dependence on N (number of neutrons) for the last half of the problem;
- the relative error of the mean flux should be less than 0.1;
- the relative error should have a $1/\sqrt{N}$ dependence for the last half of the problem;
- variance of variance should be less than 0.1 for all tallies and decrease as 1/N for the last half of the problem;
- the figure of merit should not have a significant monotonic dependence on N for the last half of the problem;
- the slope determined from the 201 largest scoring events should be greater than 3.

5. MONTE CARLO RESULTS AND MEASUREMENTS COMPARISON

Two different fuel loading measurements results were compared with MCNP6 dose rate predictions. It should be mentioned that only gamma dose rate measurements were available for comparison. Dose rates were measured at the centre of the spent fuel transport cask surface.

Average calculation/measurement ratio for gamma dose rates at the centre of the spent fuel transport cask surface is 1.25.

6. CONCLUSIONS

Taking into account that usual gamma field measurement accuracy is within 10-15%, Monte Carlo simulation overpredicts gamma dose rates by about 10-15%. In general, this is good agreement taking into account uncertainties in isotopic composition predications, operational data, axial burnup profiles, cross-sections data as well as geometrical tolerances.

REFERENCES

[1] Safety Analysis Report for Medzamor NUHOMS Storage, DOS-06-00029988 Revision 1, DOS-06-00029988 Revision 1

[2] C. GAULD, S. M. BOWMAN, J. E. HORWEDEL, ORIGEN-ARP: Automatic rapid processing for spent fuel depletion, decay, and source term analysis, ORNL/TM-2005/39, Version 6, Vol. I, Sect. D1

[3] T. GOORLEY, et al., "Initial MCNP6 Release Overview", Nuclear Technology, 180, pp 298-315(2012)

[4] Conversion Coefficients for Use in Radiological Protection against External Radiation, ICRP Report 74, Ann. ICRP 26 (3-4), 1996