COMPLETE CO-PROCESSING OF SPENT FUEL AS A BACK-END FUEL CYCLE STRATEGY

B.B. ACAR
Hacettepe University
Ankara, Turkey
banubulutacar@hacettepe.edu.tr

H.O. ZABUNOGLU
Hacettepe University
Ankara, Turkey

Abstract

Uranium (U) and Plutonium (Pu) in spent nuclear fuel are obtained as separate and pure streams by the standard reprocessing method, Purex solvent extraction. Economical and technological conditions and safeguard concerns have not allowed the standard Purex (and recycling of the recovered materials) to be an integral part of the nuclear fuel cycle. Easier and cheaper methods to recover U and Pu in spent fuel are worthwhile taking into account. Complete co-processing, based on a Purex scheme, is probably the easiest way of separating U and Pu from spent fuel; in addition, it is advantageous with regard to safeguards because it does not yield pure Pu. Products of complete co-processing are two separate mixtures: (1) U+Pu and (2) Fission Products and Minor Actinides (FPs+MAs). Because U+Pu mixture obtained from spent LWR fuels has a total fissile content of roughly 1.5 weight percent, which is not suitable for LWRs, special approaches are required for recycling in case of complete co-processing. The other product is High Level Waste by definition, which does not contain any isotope usable for energy generation.

This study focuses on a scenario in which, after a proper pre-cooling period, the complete co-processing is applied, and U+Pu and FPs+MAs are obtained; then, these mixtures are stored: U+Pu as a potential reserve to be utilized in energy production and FPs+MAs as waste to be permanently disposed of, in the middle and/or long run. The purpose is to investigate effects of such a scenario on the back-end of the nuclear fuel cycle. Radio-toxicity levels and compositions of U+Pu and FPs+MAs products of the complete co-processing are determined as a function of the lengths of the storage periods (before and after processing), and several options regarding what to do with them in the long term is discussed and compared.

1. INTRODUCTION

Although safe management of spent fuels (SF) generated in nuclear reactors is an important factor for sustainability of nuclear industry, there is no generally accepted solution for this issue up to the present. Typically, SF discharged from a reactor contains 95 weight percent (w/o) U, 1 w/o Pu, 4 w/o FPs and MAs. Additionally, U in SF still has fissile U-235 isotope (slightly more than natural U) and Pu in SF has a fissile content (Pu-239 and Pu-241) greater than 65 w/o. SF can be regarded as waste and sent to disposal or reprocessed in order to recover valuable U and Pu in it.

Currently, Purex solvent extraction is standard method of reprocessing SF and applicable in industrial scale. In the Purex, U and Pu in SF are extracted from FPs and MAs as separate and pure streams. Remaining part of SF is treated as High-Level Waste (HLW). In the standard reprocessing, general approach is based on recycling these two products. U product with 0.85 w/o fissile content can be recycled after the enrichment while Pu product with fissile content greater than 65 w/o can be resent to reactor as mixed oxide fuel (MOX), which is produced by blending the Pu stream with fertile a material (depleted or natural U). Hence, applying the standard reprocessing enhances the utilization of resources and reduces the amount and radiotoxicity of waste to be managed. On the other hand, because of the pure Pu product (with fissile content greater than 65 w/o), the standard reprocessing has low proliferation resistance. Therefore, alternative solvent extraction techniques have been considered. Complete co-processing is one of these techniques, aiming to recover U and Pu in SF as a mixture. In addition to U+Pu mixture, a HLW solution is produced during complete co-processing. U+Pu mixture, with a total fissile content of roughly 1.5 w/o, can be recycled in a LWR after blending with a fissile material or directly sent to a CANDU-type reactor as fuel. Another approach is long term storage of U+Pu product and conditioned HLW solution as a waste management strategy. This study aims to observe radiological

behavior of these two products during the long-term storage and discuss advantages and disadvantages of the complete co-processing from the point of waste management.

2. COMPLETE CO-PROCESSING

In the standard reprocessing, U and Pu are recovered from SF separately and in high purity by applying a solvent extraction method called PUREX (Plutonium Uranium Recovery by Extraction). In the Purex, by using an organic solvent (30 % tri-butyl phosphate in a hydrocarbon), pure and separate aqueous U and Pu solutions are obtained in three stages: In the first stage named "Co-decontamination", U and Pu are decontaminated from FPs and MAs. Then, Pu is partitioned from U in the "Partitioning" stage. In the last stage "Stripping", U is transferred from the organic phase to the aqueous. In the complete co-processing, U and Pu are recovered together from SF, and so, a simplified form of PUREX that does not include "Partitioning" stage is employed. A flow sheet for the complete co-processing is shown in Fig.1.

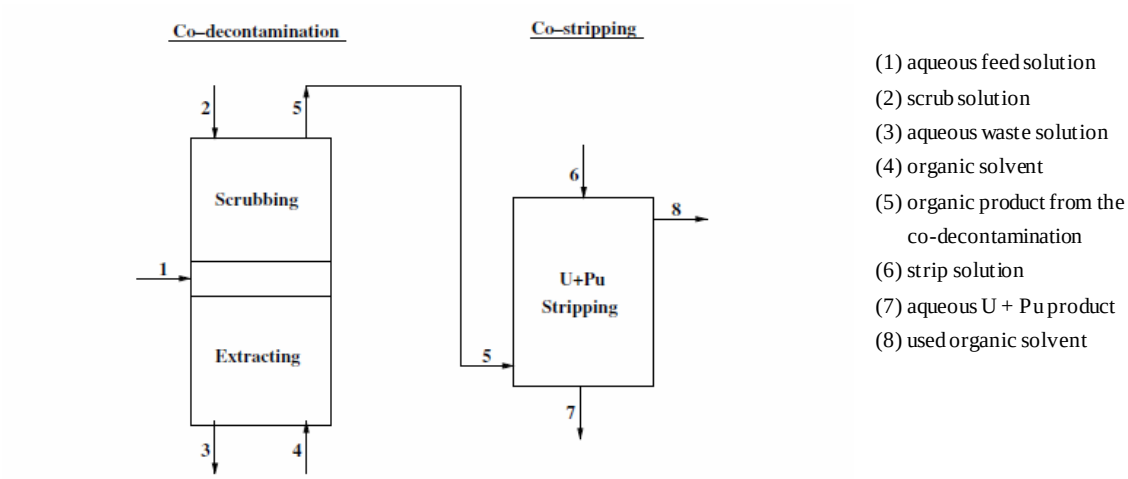

FIG. 1. Flow sheet for complete co-processing [1].

As in the standard reprocessing, in order first to separate U and Pu from FPs and MAs, a "co-decontamination" stage is applied in the complete co-processing. Then, in the co-stripping stage, U and Pu are washed back into the aqueous phase. Aqueous U+Pu solution, with a total fissile content of roughly 1.5 w/o, is one of the products of the complete co-processing. The other product, consisting of FPs and MAs, is HLW.

3. ANALYSIS

The purpose of the study is to investigate the scenario based on the storage of both U+Pu and FP+MA products of the complete co-processing of SF discharged from a typical LWR. First step of the analysis is determination of isotopic content of SF discharged from the reference reactor. Then, after a proper pre-cooling time, it is assumed that SF is sent to the complete co-processing and almost all U+Pu are separated from FPs+MAs. Finally, radio-toxicity levels and isotopic contents of U+Pu and FP+MA products of the complete co-processing are determined as a function of the lengths of the storage periods after processing. Calculations of radioactivity and isotopic content are carried out by unit cell modelling of the reference reactor in MONTEBURNS2.0 burnup code.

3.1. Reference Reactor

In the analysis, a 1000-MWe PWR loaded with 3.3 w/o enriched UO2 fuel is taken as the reference reactor. Fuel discharged from the reference reactor has a burnup of 33000 MWd/tU for 1000 days of irradiation time. The capacity factor and thermal efficiency of the reactor are 80 % and 0.33, respectively. Material

properties and geometric data for the unit cell introduced in OECD/NEA Burnup Credit Calculational Criticality Benchmarks are used in MONTBURNS2.0 modelling of the problem, and tabulated in Table 1 [2].

TABLE 1. PHYSICAL DATA FOR UNIT CELL CALCULATIONS

Parameter	Data
Chemical form of fuel pellet	UO_2
Fuel density	10.045 g/cm^3
Rod pitch	1.5586 cm
Rod outer diameter	1.118 cm
Rod inner diameter	0.986 cm
Fuel diameter	0.9563 cm
Active fuel length	347.2 cm
Effective fuel temperature	841 K
Clad temperature	620 K
Clad material	Zircaloy (97.91 wt % Zr, 1.59 wt % Sn, 0.5 wt % Fe)
Water temperature	558 K
Water density	0.7569 g/cm^3

3.2. Monteburns2.0 Code

All analyses are performed by MONTEBURNS2.0 burnup code, which couples the MCNP Monte Carlo transport code with the burnup/depletion code ORIGEN2. MONTEBURNS2.0 processes the input file containing geometry and initial material compositions, power and time intervals, feed/removal specifications, and other code-specific parameters, then produces a large number of criticality and burnup results The principle function of MONTEBURNS2.0 is to transfer one-group cross section and flux values calculated in MCNP to ORIGEN2, and then transfer the resulting material compositions (after irradiation and/or decay) calculated in ORIGEN2 back to MCNP in a repeated, cyclic fashion [3]. Figure 1 shows workflow of MONTEBURNS2.0 code.

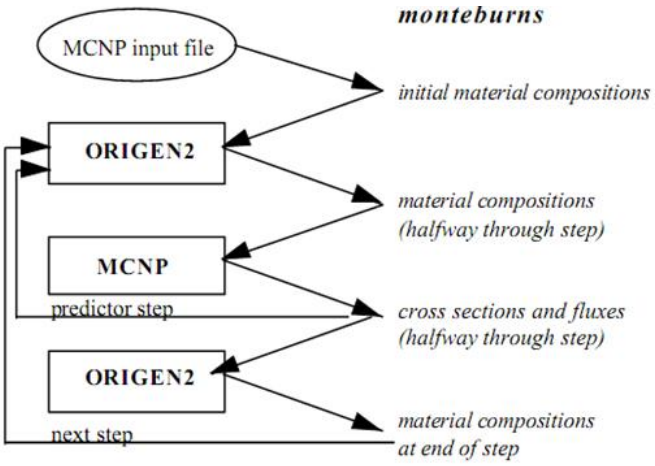

FIG. 1. Workflow of Monteburns code [3].

3.3. Determination of Characteristics of Spent Fuel and Co-processing Products

Decay heat and composition of fuel enriched to 3.3 w/o and irradiated to 33000 MWd/tU burnup are calculated by using MONTEBURNS2.0. The composition of one ton of SF after different cooling periods is given in Table 2.

TABLE 2. COMPOSITION OF SF FOR DIFFERENT COOLING PERIODS

	Cooling Period (years)						
	1	10	60	80	100	1000	10000
U-233	1.85E-03	3.19E-03	1.10E-02	1.43E-02	1.78E-02	2.83E-01	2.74E+00
U-234	1.30E+02	1.31E+02	1.36E+02	1.37E+02	1.38E+02	1.45E+02	1.43E+02
U-235	7.32E+03	7.32E+03	7.33E+03	7.33E+03	7.33E+03	7.43E+03	8.05E+03
U-236	3.59E+03	3.59E+03	3.60E+03	3.60E+03	3.61E+03	3.78E+03	4.57E+03
U-237	2.54E-05	1.65E-05	1.48E-06	5.68E-07	2.17E-07	3.02E-11	1.85E-11
U-238	8.33E+05	8.33E+05	8.33E+05	8.33E+05	8.33E+05	8.33E+05	8.33E+05
U-240	4.39E-13	4.39E-13	4.39E-13	4.39E-13	4.39E-13	4.39E-13	4.39E-13
U_{total}	8.44E+05	8.44E+05	8.44E+05	8.44E+05	8.44E+05	8.44E+05	8.46E+05
$U_{fissile}$ (%)	0.867	0.867	0.868	0.868E-01	0.868	0.879	0.9522
Pu-237	5.76E-08	3.84E-18	0.0	0.0	0.0	0.0	0.0
Pu-238	1.28E+01	1.35E+01	9.15E+00	7.82E+00	6.70E+00	8.86E-03	4.73E-15
Pu-239	4.10E+03	4.10E+03	4.09E+03	4.09E+03	4.09E+03	3.99E+03	3.37E+03
Pu-240	1.88E+03	1.88E+03	1.88E+03	1.88E+03	1.87E+03	1.70E+03	9.03E+02
Pu-241	8.20E+02	5.33E+02	4.80E+01	1.83E+01	7.01E+00	9.76E-04	5.98E-04
Pu-242	3.40E+02	3.40E+02	3.40E+02	3.40E+02	3.40E+02	3.40E+02	3.36E+02
Pu-243	3.03E-14	3.03E-14	3.03E-14	3.03E-14	3.03E-14	3.03E-14	3.03E-14
Pu_{total}	7.16E+03	6.87E+03	6.37E+03	6.34E+03	6.32E+03	6.03E+03	4.61E+03
$Pu_{fissile}$ (%)	68.88	67.46	64.98	64.83	64.88	66.15	73.13
MAs	7.16E+02	1.00+03	1.48E+03	1.51E+03	1.52E+03	1.52E+03	1.52E+03

Quantities are in gram per ton of spent fuel.

The cooling period before co-processing is chosen as 5 years and composition of SF at the end of this period is obtained. Composition, decay heat, radioactivity and radiotoxicity calculations of FP+MA and U+Pu from the complete co-processing are determined by using the composition of the 5-year cooled SF. In the co-processing, it is assumed that 99.9 % of U and Pu are recovered and the HLW solution contains all FPs, MAs and the residual amount of U and Pu (0.1 %). Table 3 and 4 represent the actinide compositions of the two products obtained from the co-processing of one ton SF.

TABLE 3. COMPOSITION OF U+Pu PRODUCT FOR DIFFERENT COOLING PERIODS

	Cooling period (years)						
	1	10	60	80	100	1000	10000
U-233	2.44E-03	2.45E-03	2.76E-03	3.09E-03	3.52E-03	1.06E-01	1.94E+00
U-234	1.31E+02	1.32E+02	1.36E+02	1.37E+02	1.38E+02	1.44E+02	1.42E+02
U-235	7.32E+03	7.32E+03	7.33E+03	7.33E+03	7.33E+03	7.43E+03	8.32E+03
U-236	3.59E+03	3.59E+03	3.60E+03	3.61E+03	3.61E+03	3.78E+03	4.80E+03
U-237	2.00E-05	1.29E-05	1.16E-06	4.47E-07	1.70E-07	0.0	0.0
U-238	8.33E+05	8.33E+05	8.33E+05	8.33E+05	8.33E+05	8.33E+05	8.33E+05
U-240	4.38E-13	4.39E-13	4.39E-13	4.39E-13	4.39E-13	4.39E-13	4.39E-13
U_{total}	8.44E+05	8.44E+05	8.44E+05	8.44E+05	8.44E+05	8.45E+05	8.46E+05
$U_{fissile}$ (%)	0.867	0.867	0.868	0.868	0.868	0.879	0.983
Pu-239	4.10E+03	4.09E+03	4.09E+03	4.09E+03	4.08E+03	3.98E+03	3.08E+03
Pu-240	1.88E+03	1.881E+03	1.87E+03	1.86E+03	1.86E+03	1.69E+03	6.52E+02
Pu-241	6.45E+02	4.18E+02	3.77E+01	1.44E+01	5.51E+00	7.55E-18	0.0
Pu-242	3.40E+02	3.40E+02	3.40E+02	3.40E+02	3.40E+02	3.40E+02	3.34E+02
Pu_{tot}	6.98E+03	6.74E+03	6.35E+03	6.32E+03	6.30E+03	6.01E+03	4.06E+03
$Pu_{fissile}$ (%)	68.00	66.90	65.00	65.00	64.90	66.20	75.70
MAs	3.18E+01	2.58E+02	6.39E+02	6.61E+02	6.69E+02	6.68E+02	6.64E+02

Quantities are in gram per ton of spent fuel co-processed

TABLE 4. COMPOSITION OF FP+MA PRODUCT FOR DIFFERENT COOLING PERIODS

	Cooling Period (years)						
	1	10	60	80	100	1000	10000
Americium	2.68E+02	2.65E+02	2.50E+02	2.44E+02	2.38E+02	9.69E+01	2.36E+01
Curium	1.32E+01	9.61E+00	2.04E+00	1.33E+00	1.00E+00	6.51E-01	3.00E-01
Californium	6.07E-07	5.65E-07	4.71E-07	4.52E-07	4.34E-07	8.87E-08	2.25E-11
Neptunium	4.13E-13	1.31E-15	1.43E-17	1.43E-17	6.66E-18	0.0	0.0
Berkelium	3.66E-09	2.98E-12	1.10E-17	1.10E-17	4.04E-18	0.0	0.0
U	8.44E+02	8.44E+02	8.44E+02	8.44E+02	8.44E+02	8.46E+02	8.62E+02
Pu	7.46E+00	1.08E+01	1.80E+01	1.88E+01	1.93E+01	2.29E+01	3.93E+01
FPs	3.84E+04	3.84E+04	3.84E+04	3.84E+04	3.84E+04	3.84E+04	3.84E+04

Quantities are in gram per ton of spent fuel co-processed

Decay heat generation rates of SF, FP+MA and U+Pu change with cooling time, and an important parameter with regard to storage and disposal. Heat removal systems needed at storage and disposal density of wastes are affected by the heat generation rate of materials to be stored or disposed of. Therefore, decay heat rates of SF, FP+MA and U+Pu are determined and compared in Fig.2.

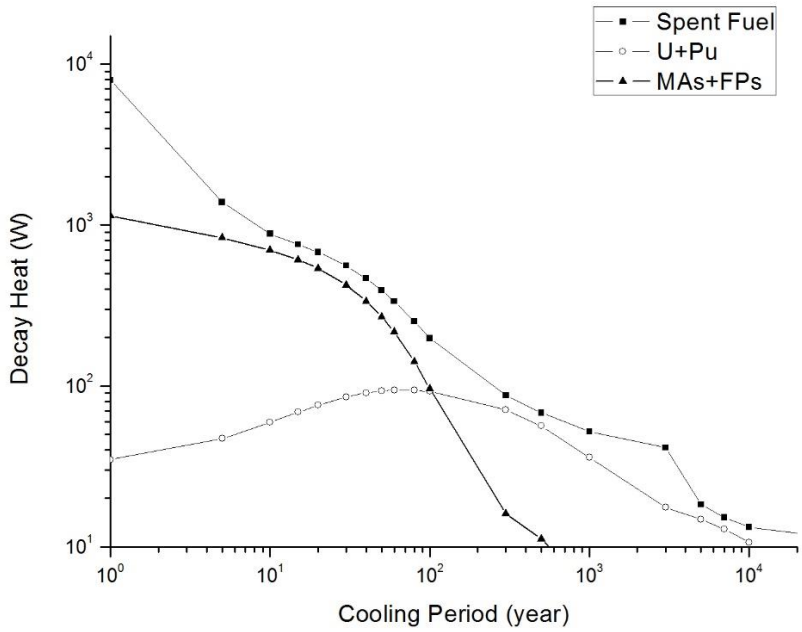

FIG. 2. Decay heat rates of SF, FP+MA and U+Pu.

In order to observe the impact of co-processing of spent fuel on the radiological hazard of materials/wastes to be stored or disposed, radioactivity and ingestion radiotoxicity of U+Pu and FP+MA products are determined for different cooling periods.

Table 5 shows change of radioactivity level of SF during long-term storage. The radioactivity of SF at storage periods shorter than 100 years is determined mainly by FPs. For longer storage periods, the contribution of FPs will decrease while the radioactivity of MAs reduces slowly. Table 6 and Table 7 represent the radioactivity levels for U+Pu and FP+MA products for different storage periods respectively. According to the data in Table 6, the total radioactivity level of U+Pu is roughly10 times less than that of SF for storage periods between 10 and 100 years. Additionally, as can be observed from Table 8, FP+MA product has a radioactivity level 10 % less compared to SF for storage periods shorter than 100 years.

Ingestion radiotoxicities for SF, FP+MA and U+Pu at long-term storage are shown in Tables 8, 9 and10. According to the data presented in Table 8, the radiotoxicity of SF will reduce in small extents at the storage periods shorter than 100 years. As can be observed from Table 9, the radiotoxicity of U+Pu increases up to

cooling periods of 80 years and shows a decrease between 80 and 100 years. On the other hand, the radiotoxicity of FP+MA remains nearly the same in all the storage periods studied.

TABLE 5. RADIOACTIVITY OF SF FOR DIFFERENT COOLING PERIODS

	Cooling Period (years)						
	1	10	60	80	100	1000	10000
U-233	1.79E-05	3.08E-05	1.06E-04	1.38E-04	1.72E-04	2.74E-03	2.66E-02
U-234	8.16E-01	8.22E-01	8.49E-01	8.58E-01	8.65E-01	9.05E-01	8.95E-01
U-235	1.58E-02	1.58E-02	1.58E-02	1.58E-02	1.58E-02	1.60E-02	1.74E-02
U-236	2.32E-01	2.33E-01	2.33E-01	2.33E-01	2.34E-01	2.45E-01	2.96E-01
U-237	2.07E+00	1.34E+00	1.21E-01	4.64E-02	1.77E-02	2.46E-06	1.51E-06
U-238	2.80E-01	2.80E-01	2.80E-01	2.80E-01	2.80E-01	2.80E-01	2.80E-01
U-240	4.07E-07	4.07E-07	4.07E-07	4.07E-07	4.07E-07	4.07E-07	4.06E-07
Pu-237	6.96E-04	4.65E-14	0.0	0.0	0.0	0.0	0.0
Pu-238	2.20E+02	2.31E+02	1.56E+02	1.34E+02	1.145E+02	1.51E-01	8.09E-14
Pu-239	2.55E+02	2.55E+02	2.54E+02	2.54E+02	2.54E+02	2.48E+02	2.10E+02
Pu-240	4.28E+02	4.29E+02	4.29E+02	4.28E+02	4.27E+02	3.88E+02	2.06E+02
Pu-241	8.45E+04	5.49E+04	4.95E+03	1.89E+03	7.23E+02	1.01E-01	6.16E-02
Pu-242	1.30E+00	1.30E+00	1.30E+00	1.30E+00	1.30E+00	1.29E+00	1.28E+00
Pu-243	7.89E-08	7.88E-08	7.88E-08	7.88E-08	7.88E-08	7.88E-08	7.88E-08
Americium	2.40E+02	1.22E+03	2.70E+03	2.71E+03	2.66E+03	6.44E+02	6.33E+00
Neptunium	3.40E-01	3.42E-01	3.76E-01	3.92E-01	4.08E-01	8.11E-01	9.38E-01
Curium	6.72E+03	8.69E+02	1.31E+02	6.22E+01	3.00E+01	1.47E-01	7.01E-02
Berkelium	3.13E-04	2.54E-07	1.77E-14	6.48E-15	6.48E-15	0.0	0.0
Californium	2.47E-05	1.05E-05	2.33E-06	1.92E-06	1.74E-06	3.08E-07	3.64E-10
FPs	1.76E+06	2.87E+05	7.55E+04	4.72E+04	2.96E+04	1.99E+01	1.20E+01
Total	1.99E+06	3.72E+05	8.43E+04	5.29E+04	3.40E+04	1.31E+03	4.51E+02

Radioactivity unit is Ci

TABLE 6. RADIOACTIVITY OF U+Pu FOR DIFFERENT COOLING PERIODS

	Cooling Period (years)						
	1	10	60	80	100	1000	10000
U-233	2.37E-05	2.37E-05	2.67E-05	2.99E-05	3.41E-05	1.01E-03	1.88E-02
U-234	8.20E-01	8.25E-01	8.51E-01	8.59E-01	8.66E-01	9.04E-01	8.88E-01
U-235	1.58E-02	1.58E-02	1.58E-02	1.58E-02	1.58E-02	1.60E-02	1.80E-02
U-236	2.33E-01	2.33E-01	2.33E-01	2.34E-01	2.34E-01	2.45E-01	3.11E-01
U-237	1.63E+00	1.06E+00	9.54E-02	3.64E-02	1.39E-02	0.0	0.00
U-238	2.80E-01	2.80E-01	2.80E-01	2.80E-01	2.80E-01	2.80E-01	2.80E-01
U-240	4.07E-07	4.07E-07	4.07E-07	4.07E-07	4.07E-07	4.07E-07	4.07E-07
Pu-237	1.78E-13	3.53E-14	0.0	0.0	0.0	0.0	0.0
Pu-238	2.39E+02	2.22E+02	1.49E+02	1.27E+02	1.10E+02	8.97E-02	0.0
Pu-239	2.55E+02	2.55E+02	2.54E+02	2.54E+02	2.54E+02	2.48E+02	1.91E+02
Pu-240	4.29E+02	4.28E+02	4.26E+02	4.25E+02	4.24E+02	3.85E+02	1.48E+02
Pu-241	6.65E+04	4.31+04	3.89E+03	1.48E+03	5.67E+02	7.78E-16	0.0
Pu-242	1.30E+00	1.30E+00	1.30E+00	1.30E+00	1.30E+00	1.29E+00	1.27E+00
Americium	1.10E+02	8.79E+02	2.05E+03	2.06E+03	2.03E+03	4.84E+02	2.64E-04
Neptunium	1.83E-05	1.54E-03	2.93E-02	4.26E-02	5.58E-02	3.71E-01	4.68E-01
Curium	2.46E-16	5.25E-15	1.34E-14	1.38E-14	1.39E-14	1.24E-14	3.31E-15
Berkelium	1.08E-14	1.53E-14	1.53E-14	1.53E-14	9.28E-15	0.0	0.0
Californium	2.96E-12	3.17E-12	2.389E-13	9.45E-14	3.89E-14	6.71E-16	0.0
Total	6.74E+04	4.49E+04	6.77E+03	4.36E+03	3.39E+03	1.13E+03	3.44E+02

Radioactivity unit is Ci

TABLE 7. RADIOACTIVITY OF FP+MA FOR DIFFERENT COOLING PERIODS

	Cooling Period (years)						
	1	10	60	80	100	1000	10000
U-233	1.45E-06	1.43E-05	8.72E-05	1.17E-04	1.47E-04	1.74E-03	1.97E-02
U-234	8.20E-04	8.30E-04	9.35E-04	9.92E-04	1.06E-03	2.37E-03	2.36E-03
U-235	1.58E-05	1.58E-05	1.58E-05	1.58E-05	1.58E-05	1.62E-05	2.96E-05
U-236	2.33E-04	2.33E-04	2.36E-04	2.38E-04	2.40E-04	3.24E-04	8.35E-04
U-237	1.63E-03	1.06E-03	9.80E-05	3.90E-05	1.65E-05	2.46E-06	1.18E-06
U-238	2.80E-04	2.80E-04	2.80E-04	2.80E-04	2.80E-04	2.80E-04	2.80E-04
U-240	4.07E-10	4.07E-10	4.07E-10	4.07E-10	4.07E-10	4.08E-10	4.19E-10
Pu-238	3.02E-01	4.52E-01	9.67E-01	1.08E+00	1.15E+00	5.72E-02	9.22E-17
Pu-239	2.55E-01	2.60E-01	2.83E-01	2.91E-01	2.98E-01	5.82E-01	2.10E+00
Pu-240	5.37E-01	1.34E+00	3.01E+00	3.16E+00	3.22E+00	2.99E+00	1.14E+00
Pu-241	6.65E+01	4.31E+01	3.99E+00	1.59E+00	6.75E-01	1.01E-01	4.82E-02
Pu-242	1.30E-03	1.31E-03	1.35E-03	1.36E-03	1.37E-03	1.53E-03	1.69E-03
Pu-243	7.88E-08	7.88E-08	7.88E-08	7.88E-08	7.88E-08	7.88E-08	7.88E-08
Americium	7.29E+02	7.19E+02	6.65E+02	6.45E+02	6.25E+02	1.55E+02	4.75E+00
Neptunium	3.41E-01	3.43E-01	3.50E-01	3.53E-01	3.56E-01	1.51E-04	0.00E+00
Curium	1.02E+03	7.18E+02	1.09E+02	5.18E+01	2.51E+01	4.41E-01	4.70E-01
Berkelium	6.00E-06	4.89E-09	1.81E-14	1.81E-14	6.62E-15	0.00E+00	0.00E+00
Californium	1.43E-05	7.92E-06	2.19E-06	1.86E-06	1.70E-06	3.05E-07	3.56E-11
FPs	2.20E+05	6.71E+04	4.19E+04	2.63E+04	1.59E+01	9.66E+00	0.0
Total	3.56E+05	2.28E+05	6.81E+04	4.28E+04	2.71E+04	1.88E+02	3.07E+01

Radioactivity unit is Ci

TABLE 8. INGESTION RADIOTOXICITY OF SF FOR DIFFERENT COOLING PERIODS

	Cooling Period (years)						
	1	10	60	80	100	1000	10000
U-233	5.98-01	1.02E+00	3.53E+00	4.62E+00	5.75E+00	9.12E+01	8.87E+02
U-234	2.72E+04	2.74E+04	2.83E+04	2.86E+04	2.89E+04	3.02E+04	2.99E+04
U-235	5.27E+02	5.28E+02	5.28E+02	5.28E+02	5.28E+02	5.36E+02	5.80E+02
U-236	7.75E+03	7.76E+03	7.78E+03	7.79E+03	7.79E+03	8.15E+03	9.85E+03
U-238	7.00E+03	7.00E+03	7.00E+03	7.00E+03	7.00E+03	7.00E+03	7.00E+03
Pu-238	4.40E+07	4.63E+07	3.13E+07	2.68E+07	2.29E+07	3.04E+04	1.62E-08
Pu-239	5.10E+07	5.10E+07	5.09E+07	5.09E+07	5.08E+07	4.96E+07	4.20E+07
Pu-240	8.57E+07	8.58E+07	8.57E+07	8.56E+07	8.54E+07	7.76E+07	4.11E+07
Pu-241	4.23E+08	2.74E+08	2.47E+07	9.45E+06	3.61E+06	5.03E+02	3.08E+02
Pu-242	2.60E+05	2.60E+05	2.60E+05	2.60E+05	2.60E+05	2.60E+05	2.57E+05
Americium	5.99E+07	3.04E+08	6.74E+08	6.78E+08	6.66E+08	1.61E+08	1.58E+06
Neptunium	1.09E+05	1.10E+05	1.22E+05	1.27E+05	1.33E+05	2.71E+05	3.13E+05
Californium	4.50E+08	1.24E+08	1.87E+07	8.79E+06	4.17E+06	1.27E+03	1.70E-09
Total	1.14E+09	8.86E+08	8.86E+08	8.60E+08	8.34E+08	2.89E+08	8.53E+07

Radiotoxicity in m^3 water

TABLE 9. INGESTION RADIOTOXICITY OF U+Pu FOR DIFFERENT COOLING PERIODS

	Cooling Period (years)						
	1	10	60	80	100	1000	10000
U-233	7.88E-01	7.89E-01	8.90E-01	9.95E-01	1.13E+00	3.39E+01	6.26E+02
U-234	2.74E+04	2.75E+04	2.84E+04	2.87E+04	2.89E+04	3.01E+04	2.96E+04
U-235	5.27E+02	5.28E+02	5.28E+02	5.28E+02	5.28+02	5.36E+02	5.99E+02
U-236	7.76E+03	7.76E+03	7.78E+03	7.78E+03	7.80E+03	8.15E+03	1.04E+04
U-238	6.70E+03	6.70E+03	6.70E+03	6.70E+03	7.00E+03	7.00E+03	7.00E+03
Pu-238	4.77E+07	4.44E+07	2.70E+07	2.56E+07	2.18E+07	1.79E+04	0.0
Pu-239	5.10E+07	5.10E+07	5.09E+07	5.08E+07	5.08E+07	4.95E+07	3.82E+07
Pu-240	8.57E+07	8.56E+07	8.52E+07	8.50E+07	8.48E+07	7.72E+07	2.98E+07
Pu-241	3.33E+08	2.15E+08	1.94E+07	7.43E+06	2.84E+06	3.88E-12	0.0
Pu-242	2.60E+05	2.60E+05	2.60E+05	2.60E+05	2.60E+05	2.60E+05	2.56E+05
Americium	2.73E+07	2.20E+08	5.12E+08	5.16E+08	5.07E+08	1.21E+08	6.59E+01
Neptunium	6.11E+00	5.16E+02	9.75E+03	1.42E+04	1.86E+04	1.23E+05	1.56E+05
Total	5.45E+08	6.16E+08	6.98E+08	6.85E+08	6.68E+08	2.48E+08	6.84E+07

Radiotoxicity in m^3 water

TABLE 10. INGESTION RADIOTOXICIITY OF FP+MA FOR DIFFERENT COOLING PERIODS

	Cooling Period (years)						
	1	10	60	80	100	1000	10000
U-233	4.83E-02	4.77E-01	2.91E+00	3.90E+00	4.91E+00	5.79E+01	6.57E+02
U-234	2.74E+01	2.77E+01	3.12E+01	3.30E+01	3.52E+01	7.90E+01	7.85E+01
U-235	5.27E-01	5.28E-01	5.28E-01	5.28E-01	5.28E-01	5.42E-01	9.87E-01
U-236	7.75E+00	7.75E+00	7.87E+00	7.93E+00	8.00E+00	1.08E+01	2.79E+01
U-238	7.00E+00	7.00E+00	7.00E+00	7.00E+00	7.00E+00	7.00E+00	7.00E+00
Pu-238	6.03E+04	9.05E+04	1.93E+05	2.16E+05	2.31E+05	1.14E+04	1.84E-11
Pu-239	5.11E+04	5.21E+04	5.65E+04	5.80E+04	5.95E+04	1.16E+05	4.20E+05
Pu-240	1.08E+05	2.69E+05	6.01E+05	6.31E+05	6.44E+05	5.96E+05	2.30E+05
Pu-241	3.32E+05	2.16E+05	2.00E+04	7.96E+03	3.37E+03	5.02E+02	2.41E+02
Pu-242	2.60E+02	2.62E+02	2.70E+02	2.73E+02	2.75E+02	3.06E+02	3.37E+02
Americium	1.82E+08	1.80E+08	1.67E+08	1.60E+08	1.55E+08	3.88E+07	1.18E+04
Neptunium	1.09E+05	1.10E+05	1.13E+05	1.14E+05	1.15E+05	1.47E+05	1.56E+05
Curium	1.45E+08	1.03E+08	1.54E+07	7.30E+06	3.48E+06	1.24E+03	0.00E+00
Total	3.28E+08	2.84E+08	1.83E+08	1.69E+08	1.60E+08	3.98E+07	2.04E+06

Radiotoxicity in m^3 water

4. CONCLUSION

According to the decay heat, radioactivity and radiotoxicity data for FP+MA and U+Pu presented above, it can be concluded that the complete co-processing can be a valuable option as a waste management strategy. Particularly, for storage periods between 80 to 100 years, separate storage of FP+MA and U+Pu presents advantages with regard to the radiological risks. At the same time, decay heats of these two products are very different from each other up to nearly 100 years, and as a result, the storage/disposal space and heat removal systems needed will decrease. Besides, when the potential product (U+Pu) and waste (FP+MA) were separated from each other at a relatively early stage of the back-end in the cycle, it would be possible to make practically meaningful and fruitful plans regarding what to do with each of them in the short and/or long run. It is a subject of further study to investigate the strategies yielding optimum outcomes for the back-end of the nuclear fuel cycle.

REFERENCES

[1] ZABUNOĞLU, O. H., OZDEMIR, L., Purex co-processing of spent LWR fuels: flow sheet, Annals of Nuclear Energy (2005) 32, 151-152.

[2] OECD/NEA Burnup Credit Calculational Criticality Benchmark Phase I-B Results M. D. M. D. DeHarts M. C. Brady C. V. Parks.

[3] POSTON, D.L.., TRELLUE, H.R., User's Manual. Version 2.0 for MONTEBURNS Version1.0. LA-UR-99-4999. Los Alamos National Laboratory. New Mexico. 1999.