ROMANIA - STATUS&TRENDS IN RADIOACTIVE WASTE MANAGEMENT

1) National framework for management of radioactive waste and spent fuel (policies, roles and responsibilities of different stakeholders (e.g. institutions overview, implementing organizations))

According to the definition presented in the Law no. 111/1996 on the safe deployment, regulation, authorization and control of nuclear activities, republished, the radioactive wastes are those materials resulted from nuclear activities for which no use was foreseen, and which contain or are contaminated with radionuclides in concentration above the exemption limits.

According to the provisions of Order 156/2005 of CNCAN President for approval of regulation on the classification of radioactive waste the general classification of radioactive waste is the following:

- excluded radioactive waste (EW)
- transitional radioactive waste (TW)
- very low level radioactive waste (VLLW)
- low and interim level short lived radioactive waste (LILW-SL)
- low and interim level long lived radioactive waste (LILW-LL)
- high level radioactive waste (HLW)

The general classification refers to the requirements for assuring the isolation from biosphere of the radioactive waste during its disposal.

The excluded radioactive waste is waste containing radionuclides with an activity concentration so small that the waste can be released from regulatory control (conditionally or unconditionally).

The transitional radioactive waste is waste having activity concentration above clearance levels, but which decays below clearance levels within a reasonable storage period (not more than 5 years).

The very low level radioactive waste is short lived waste in which the activity concentration is above the clearance levels, but with a radioactive content below levels established by CNCAN for defining the low level waste. The disposal of very low level waste requires less complex arrangements than the disposal of short lived low level waste.

The low and intermediate level radioactive waste is radioactive waste in which the activity concentration is above the levels established by CNCAN for the definition of very low level waste, but with a radioactive content and thermal power below those of high level waste. Low level waste does not require shielding during handling or transportation. Intermediate level waste generally requires shielding during handling, but needs little or no provision for heat dissipation during handling or transportation.

The long lived radioactive waste is a waste containing radionuclides with half life above 30 years in quantities and/or concentrations of activity above the values established by

CNCAN, for which isolation from biosphere is necessary for more time than the institutional control duration.
The short lived radioactive waste is a radioactive waste that is not long lived.

The high level radioactive waste is:

- ✓ liquid radioactive waste containing the most part of fission products and actinides existing initially in the spent fuel and forming the residues of the first extraction cycle of reprocessing;
- ✓ the solidified radioactive waste of letter a) and the spent fuel;
- ✓ any other radioactive waste with activity concentration range similar to the waste mentioned at letter a) and b).

According to the above mentioned regulation, each waste producer shall establish an operational classification of the waste that it manages.

The operational classification of radioactive waste is performed taking into account: origin and types of the waste, nuclear and radiological properties, management options, other properties such as: physico-chemical and biological properties/hazards corrosivity, content of free liquids, flammability, volatility, solubility, miscibility, dispersibility, organic content, complexing/chelating agents, reactivity, sorption of radionuclides, swelling potential, chemically or biologically hazardous substances, etc.

The main general aspects of radioactive waste management policy are presented below:

- ✓ The radioactive waste management, including the transport, shall be licensed, and shall be performed according to the provisions of the applicable laws and regulations, ensuring safety of facilities, protection of human health and environment;
- ✓ The licensees have the responsibility for the management of radioactive waste arising from operation and decommissioning of their own nuclear and radiological facilities, up to disposal. They shall bear the expenses related to the collection, handling, transport, treatment, conditioning, storage and disposal of the waste that they have produced;
- ✓ The licensees shall pay the legal contribution to the Fund for the management of radioactive waste and to the Fund for decommissioning of nuclear installations;
- ✓ National Commission for Nuclear Activities Control, (CNCAN) - the regulatory body- has the responsibility for radioactive waste regulatory policy;
- ✓ Nuclear Agency and for Radioactive Waste (ANDR) has the responsibility for disposal of the spent nuclear fuel and of the radioactive waste, including those resulted from the decommissioning of nuclear and radiological facilities;
- ✓ Spent fuel produced by NPPs shall not be reprocessed;
- ✓ Spent fuel produced by NPP's shall be stored for limited period in dry storage facilities; after the storage period, the spent nuclear fuel shall be disposed of in a deep geological repository;
- ✓ Spent fuel produced by research reactors shall be returned back to origin countries;
- ✓ LILW-SL shall be disposed of in a near surface repository;
- ✓ VLLW could be disposed of in less complex arrangement than LILW-SL;
- ✓ LILW-LL shall be disposed of in a deep geological repository;
- ✓ The import of radioactive waste is prohibited;

- ✓ The time scheduling for decommissioning and radioactive waste disposal shall comply, the requirements for not imposing undue burden on future generations;
- ✓ According to international agreements signed with neighbor countries, the protection of human health and environment beyond national borders shall be assured in such a way that the actual and potential health effects will be not more detrimental than those accepted for Romania.
- ✓ The discharges of gaseous and liquid radioactive effluents from any nuclear facility shall be limited, according to the derived emission limits approved by CNCAN, and further reduced, according to the optimization principle.
- ✓ By the conditions set in the operating license, and by regulatory dispositions, the holder of license is requested to transfer the radioactive waste (including the spent radioactive sources) for treatment and disposal or long term storage at dedicated licensed facilities.
- ✓ Any nuclear and major radiological facilities shall have an initial decommissioning plan; for new facilities, this requirement applies since the design stage, when the application for the siting license is submitted to CNCAN.

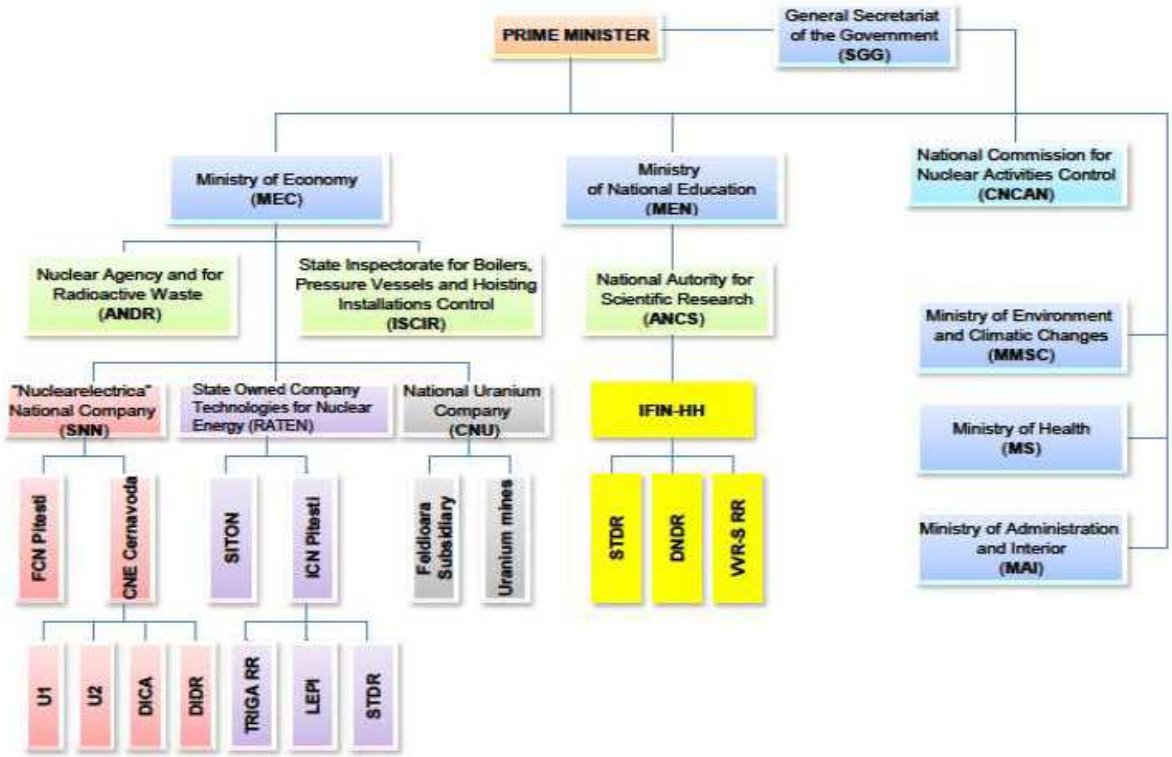

Fig. A1 Main Organizations in Nuclear Field

2) **National legal and regulatory framework (primary legislation and general regulations, regulatory organization, specific activities and facilities regulation, guidance on implementation)**

Laws:

- ✓ Law no.111/1996 on the safe deployment, regulation, authorization and control of nuclear activities, republished with subsequent completion and modification
- ✓ Law no.105/1999 on the ratification of Joint Convention on the safe management of nuclear fuel and on the safe management of radioactive waste
- ✓ Government Ordinance no. 195/2005 on environmental protection
- ✓ Law no. 481/2004 on civil protection
- ✓ Law no. 43/1995 on ratification of Nuclear Safety Convention
- ✓ Law no. 703/2001 on civil liability for nuclear damages
- ✓ Governmental Ordinance no. 11/2003 regarding the management of nuclear spent fuel and radioactive waste, including their disposal, with subsequent modifications and completions
- ✓ Governmental Ordinance no. 7/2003 regarding the use of nuclear energy in exclusive peaceful purposes, with subsequent modifications and completions
- ✓ Law no. 15/2005 for approval of Governmental Ordinance no. 21/2004 on national system of emergency situations management.

Fundamental regulations on radiological safety:

- ✓ Order no. 14/2000 of CNCAN President on the approval of Radiological Safety Fundamental Regulations; this regulation transposed the Council Directive 96/29/EURATOM of 13 May 1996 laying down basic safety standards for the protection of the health of workers and the general public against the dangers arising from ionizing radiation.
- ✓ Order no. 381/2004 of Health Minister for approval of Fundamental sanitary regulations on the safe deployment of nuclear activities.
- ✓ Order no. 56/2004 of CNCAN President for approval of Fundamental regulations on the safe management of radioactive waste and spent nuclear fuel, republished.

CNCAN is the national authority competent in exercising regulation, licensing and control in the nuclear field, for all the activities and installations under the scope of the Law.

3) Waste management, decommissioning and spent fuel strategy and current practices & technologies (radioactive waste and spent fuel management strategies, overview of main waste and spent fuel issues, overview of research and development programmes, overview of financing of waste and spent fuel management).

The strategies for the management of spent nuclear fuel as well as for the management of radioactive waste are presented in the Figures B1 and B2.

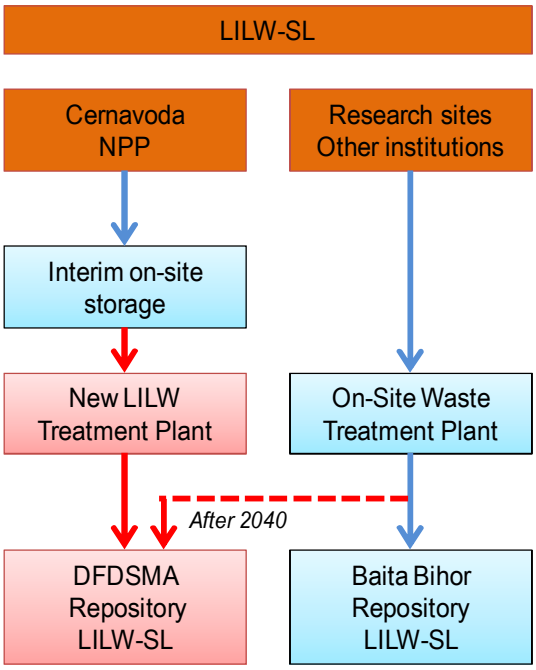

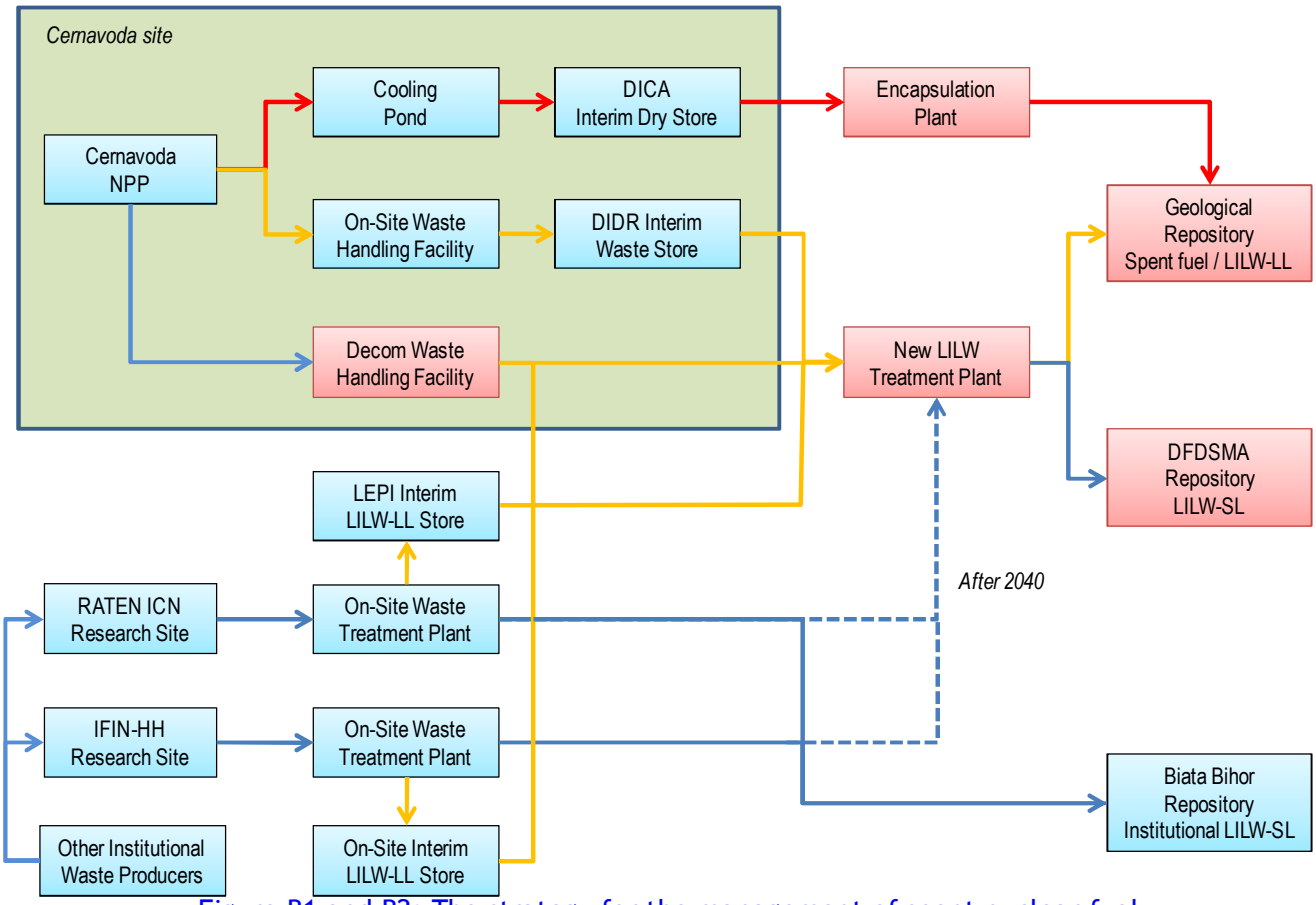

Figure B1 and B2: The strategy for the management of spent nuclear fuel resulted from operation of both NPP and research reactors

Spent fuel from Cernavoda NPP

CNE Cernavoda is located at 1 km distance of Cernavoda town, close to Danube River. CNE Cernavoda, the operator of Cernavoda NPP-Units 1 and 2, has the following spent fuel management facilities:

- The Spent Fuel Handling System (for each unit);
- The Interim Spent Fuel Dry Storage Facility - DICA.

The facilities are located on NPP site.

- *The Spent Fuel Handling System*

A wet spent fuel management facility, specifically named Spent Fuel Handling System, was provided for each reactor as part of the NPP project. This system includes the following:

- Discharge and Transfer Equipment located in the Reactor Building;
- Spent Fuel Reception and Storage Equipment located in the Service Building;
- Spent Fuel Reception Bay located in the Service Building;
- Spent Fuel Bay (main storage bay) and Defective Fuel Bay, located in the Service Building.

The transfer of spent fuel between Reactor Building and Service Building is underwater through a Transfer Channel.

According to design data, the Spent Fuel Bay has a capacity of 50,000 CANDU fuel bundles and the Defective Fuel Bay has a capacity to store for thirty years plant operation the canned defected fuel. Sixteen cans are initially provided, each with capacity of one bundle.

- *The Interim Spent Fuel Dry Storage Facility (DICA)*

After at least six years in the wet storage facility, the spent fuel is transferred to the dry storage facility. Due to a limited capacity of the wet storage facility, 4 of 27 modules of a spent fuel dry storage facility were constructed on CNE Cernavoda site. DICA *(Figure B4)* is located at around at 700 m SW-W from the first reactor, close to the envelope of the initially fifth planned reactor on-site. The storage capacity will be expanded gradually up to 324,000 spent fuel bundles, assuring storage of spent fuel resulted from operation of two reactors for the 30 years each one.

The dry storage technology is based on the MACSTOR System. It consists of storage modules located outdoors in the storage site, and equipment operated at the spent fuel storage bay for preparing the spent fuel for dry storage. The spent fuel is transferred from the preparation area to the storage site in a transfer flask. The transportation is on-site.

Spent fuel is loaded into stainless steel baskets. Each basket is closed (by soldering) with a lid and is transported to the Dry Storage Facility. There, 10 baskets (one of the top of the other) are stored into a stainless steel cylinder (embedded into concrete slab), which is also closed by a welded lid. So there is no direct access available to the spent

fuel for periodic inspections. Measurements are performed periodically only on samples of raining water (collected at the base of each Module), to detect possible leaks of reactivity. So far, such leaks have never happened.

After minimum 6 years storage in the spent fuel bay the spent nuclear fuel from operation of CNE Cernavoda is transferred to Intermediate Dry Storage Spent Fuel Facility (DICA) that has a designed lifetime of 50 years. The life time of the Dry Storage Facility is defined based on the design criteria. The period of interim storage is mentioned in the national strategy on the safe management of spent nuclear fuel and safe management of radioactive waste.

The DICA was designed to accommodate the spent fuel generated from 30 years operation of the 2 CANDU units, respectively 324.000 fuel bundles. The first module of DICA was put in operation in 2003, the second in 2006, the third module 2008, and the fourth is in operation since 2010.

Acording to National Strategy for RW management, a geological repository should be available for HLW and SF disposal by 2055.

- **Spent fuel from the research reactors:**

ICN Pitesti, the operator of TRIGA reactor, has the following spent fuel management facilities:
- The Spent Fuel Pool;
- The Dry Storage Pits.

The spent fuel removed from the TRIGA reactor can be stored for one year in the reactor pool, in 6-bundle racks. After this delay time the spent fuel bundles are transferred in the spent fuel storage pool. Storage conditions are similar to those in the TRIGA pool. The storage time could be 20 to 30 years.
Romania has adhered to the US Government policy with respect to return to the country of origin the HEU type spent fuel in American research reactors abroad. According to the agreement signed by Romania, in 2006, all the HEU type fuel has been removed from reactor and returned to USA.
Solid radioactive waste generated in the hot cells, during the fuel post irradiation examination, can be stored in 13 dry storage pits. These pits are stainless steel tubes, located in the experimental cell basement, closed with superior end plugs.
Storage racks inside pits can accommodate spent fuel rods or fragments stored in stainless steel cans.

IFIN-HH

IFIN-HH is the owner of VVR-S reactor which is now under decommissioning.
Now, there is no nuclear fuel on site. The entire inventory of spent nuclear fuel has been shipped back into origin country, in Russian Federation.

- **Radioactive waste management**

CNE Cernavoda has the designated facilities for proper current management of its operational radioactive wastes, in order to ensure the protection of the workers, public and environment:

a) The Gaseous Radioactive Waste System
Potentially contaminated air is circulated through four ventilation systems:
b) The Aqueous Liquid Radioactive Waste System
The radioactive liquid wastes (aqueous) are collected in five liquid effluent hold-up tanks. They are located in the basement of Service Building. Each tank has a capacity of 50 m3.
c) The Spent Resins Handling System
The Spent Resins Handling System includes storage tanks for spent resins from the plant's purification circuits.
The spent resins are stored in three vaults made of reinforced concrete lined with epoxy, located in the basement of the Service Building, in the proximity of the Reactor Building. The capacity of each vault is of 200 m3.
d) The Solid Radioactive Waste System
After pretreatment (collection, segregation, decontamination) and treatment (compaction or shredding, as appropriate) the solid wastes (except spent resins and reactivity control rods) are confined in 220L stainless steel drums (type A container) and transported to the Solid Radioactive Waste Interim Storage Facility – DIDR, on NPP's site.

IFIN-HH
The management of the institutional radioactive wastes is performed at IFIN–HH through a specialized department. The Radioactive Waste Management Department (DMDR) is the operator of two important facilities at the national scale:
o Radioactive Waste Treatment Plant (STDR);
o National Repository for Low and Intermediate Level Waste, Baita – Bihor (DNDR). – disposal

ICN Pitesti
The management of the own radioactive wastes is performed at ICN Pitesti. In the scope of management of radioactive waste ICN Pitesti has in operation two facilities:

- **Radioactive Waste disposal**

The implementation of the Romanian national strategy for radioactive waste management aims to create an operating repository for low- and intermediate-level radioactive waste by 2020. The facility will be suitable to accommodate short-lived radioactive waste, with long-lived radionuclides in limited quantities originating from operation and decommissioning of four units at Cernavoda NPP assuming 30 to 40 years of operational lifetime per unit. The concept proposed for disposal of the waste is a near-surface repository with multiple barrier system. The repository is composed of disposal cells located on the ground surface. The cells are placed on a foundation, built on an improved foundation soil. Into the disposal cells are located the disposal modules, which contain waste packed in drums, conditioned and stabilized by cementation into a disposal matrix. After the introduction of the disposal modules into the cell, the empty spaces are filled with sand. Above the last level of the disposal modules there is another layer of backfilling material up to the reinforced concrete plate.

The disposal of institutional radioactive waste is performed in the National Repository for Low and Intermediate Level Wastes Baita – Bihor. The repository is located at an elevation of 840 m in two disused exploration galleries of the Baita uranium mine (Gallery 50 and Gallery 53 – the latter is currently being used for ventilation purposes). Galleries 50 and 53 are part of an extensive network of interconnected uranium

exploration and exploitation galleries associated with the mining operations. Gallery 50, and certain transverse galleries leading from it, were enlarged and modified to make them suitable for waste disposal prior to the commencement of repository operations in 1985. The Baita Bihor repository was designed to accommodate around 5,000 m3 of conditioned wastes disposed in about 21,000 standard containers. The first waste disposals were made in 1985 and it is assumed that disposals will continue until 2040.

The management of the own radioactive waste at ICN Pitesti is performed in its Radioactive Waste Treatment Facility. The radioactive waste which meet the waste acceptance criteria of DNDR Baita are treated and conditioned using the existing installations from STDR. The conditioned radioactive waste are transferred, transported and disposed of at DNDR Baita. The radioactive waste which does not meet the waste acceptance criteria for disposal at DNDR Baita are stored in dry storage pits at LEPI.

4) Waste classification, waste and spent fuel quantities (inventory) and disused sources, waste management facilities).

The radioactive waste classification system used in Romania is defined by CNCAN in Regulation NDR-03 (Norms on the classification of radioactive waste, CNCAN President Order 156/2005), and is set out in Table 2. This system is fully consistent with the IAEA's recommendations (IAEA, 2009).

Waste Class	Typical Characteristics	Management options
VLLW (Very Low Level Waste)	This type of waste consists of short lived radionuclides, and activity concentration above clearance levels but below the threshold for LLW.	Near surface disposal in a repository with less complex arrangements than needed for LLW-SL.
LILW-SL (Short Lived, Low and Intermediate Level Waste)	This type of waste contains radionuclides with half-life < 30 years and activity concentration above the threshold for VLLW, but whose radioactive contents and heat output are lower than those of HLW.	Near surface disposal in an engineered repository.
LILW-LL (Long Lived, Low and Intermediate Level Waste)	This type of waste contains radionuclides with half-life > 30 years and activity concentration above the threshold for VLLW, but whose radioactive contents and heat output are lower than those of HLW.	Interim storage prior to geological co-disposal with spent fuel.
HLW (High Level Waste)	This type of waste contains long-lived radionuclides and has a radiogenic heat output which requires special considerations for handling or final disposal. Spent fuel belongs to this class.	Interim storage to allow for cooling prior to geological co-disposal with LILW-LL.

Each waste producer and waste management organization may also apply an 'operational classification scheme' to enable sorting, segregation and treatment of wastes for pre-

disposal waste management activities. The operational classification scheme may take account of the origin and types of the waste, their radiological properties as well as their physical, chemical and biological properties (e.g. water content, volatility, flammability, swelling potential, reactivity, hazardous substances content etc).
The operational classification scheme is not a replacement for the statutory classification scheme.

Tabel 1. Waste in STORAGE at the end of 2013

Waste Class	Processed for disposal	Total Current Volume (m^3) Mass (kg)	Estimated Disposal Volume (m^3) If available	Distribution (m^3) if available						
				RO	FFE	RP	NA	DF	DC/RE	ND
Total of All Classes	Yes/No	(m^3) (kg)	(m^3)	(m^3)	(m^3)	(m^3)	(m^3)	(m^3)	(m^3)	(m^3)
LLW*	No	53,687	-	53,687		0	0	0	0	0
ILW-SL*	No					0		0	0	0
ILW-LL*	No	-	-	0		0		0	0	0
HLW*	No	-	-	-	0	0		0	0	0
SF*	No	-	-	-	0	0	0	0	0	0

*clasele sa corespunda clasificarii nationale (la noi = clasif. AIEA)

RO - operare reactori
FFE - fabricare combustibil
RP - reprocesare combustibil
NA - aplicatii nucleare
DF - aplicatii militare
DC/RE - dezafectare si remediere
ND - ne-determinat

Tabel 2. Waste Disposed (as disposed volume) at the end of 2013

Waste Class	Processed for disposal	Total Volume (m^3)	Distribution (m^3) if available						
			RO	FFE	RP	NA	DF	DC/RE	ND
Total of All Classes	Yes/No	(m^3)	(m^3)	(m^3)	(m^3)	(m^3)	(m^3)	(m^3)	(m^3)
LLW* ILW-SL*	Yes	197,718	0	0	0	197,718	0	0	0
ILW-LL*	0	0	0	0	0	0	0	0	0
HLW*	0	0	0	0	0	0	0	0	0
SF*	0	0	0	0	0	0	0	0	0

Tabel 3. Spent Fuel at the end of 2012

Type	Current Amount in storage (NPP) - bundles	Current Amount in storage (Research Reactors)
Spent Fuel Storage	119,198	0 Ifin + X TRIGA
Wet storage (AR)	64,598	0 Ifin + X TRIGA
Wet storage (AFR)	0	0
Dry storage (AR)	54,600	0 Ifin + X TRIGA
Dry storage (AFR)	0	0
Total amount Spent Fuel sent to Reprocessing and Recycling	0	0
Total amount Spent Fuel returned to country of origin for storage/disposal	0	Y Ifin to Russia Z ICN to France (USA?)

AR = at reactor site
AFR = away from reactor site

Tabulation of processing, storage and disposal facilities, capacity and status

Type	Planned	Construction	Commissioning	In Operation	Shutdown	Deccomm.	Other	Total
Spent fuel storage	1	0	0	1	0	0	0	2
SF reprocessing and recycling	0	0	0	0	0	0	0	0
SF conditioning	1	0	0	0	0	0	0	1
SF disposal	1	0	0	0	0	0	0	1
Waste processing & conditioning								
LLW-SL	1	0	0	2 (IFIN +ICN)	0	0	0	3
LLW-LL	1	0	0	2 (IFIN +ICN)	0	0	0	3
ILW-SL	1	0	0	2 (IFIN +ICN)	0	0	0	3
ILW-LL	1	0	0	2 (IFIN +ICN)	0	0	0	3
HLW	0	0	0	0	0	0	0	0
Waste storage								
LLW-SL	1	0	0	1	0	0	0	2
LLW-LL	1	0	0	0	0	0	0	1
ILW-SL	1	0	0	1	0	0	0	2
ILW-LL	1	0	0	0	0	0	0	1
HLW	0	0	0	0	0	0	0	0

Processing and storage facilities

Disposal facilities

Type	Planned	Construction	Commissioning	In Operation	Shutdown	Deccomm.	Other	Total
Waste disposal								
LLW-SL	1	0	0	1	0	0	0	2
LLW-LL	1	0	0	0	0	0	0	1
ILW-SL	1	0	0	1	0	0	0	2
ILW-LL	1	0	0	0	0	0	0	1
HLW	1	0	0	0	0	0	0	1

Summary of major sources of waste (from IAEA, PRIS, INFCIS &RRDB databases)

Type	Planned	Construction	Commissioning	In Operation	Shutdown	Deccomm.	Other	Total
Research reactors*	**1 - ALFRED research reactor from INR - Mioveni**	0	0	1	0	1	0	2+1
Nuclear Power Reactors	2	0	0	2	0	0	0	4
SF reprocessing and recicling	0	0	0	0	0	0	0	0
Other**	0	0	0	0	0	0	0	0

* With medium or high power

**if applicable, where included in national inventory: e.g. deccomissioning of contaminated facilities, cleanup of accident related sites

Trends and future prospects (from Joint Convention, where available)

Type	Current amount	Total forecast at 2030	Total forecast at 2050
SF Storage	MTHM	MTHM	MTHM
Wet storage (AR)			
Wet storage (AFR)			
Dry storage (AR)			
Dry storage (AFR)			
Total amount Spent Fuel sent to Reprocessing and Recycling			
Total amount Spent Fuel disposed			
Waste in storage	m3		
Multiple lines by country waste class			
Waste disposal			
Multiple lines by country waste class			

The summary inventory of spent fuel and radioactive waste quantities in Romania.

Waste producer	Waste class	Current quantities	Future quantities		Total quantity	Brief description of waste materials
			Operation/ refurbish	Decommission		
SPENT FUEL						
Cernavoda NPP Units 1&2	HLW	2,289 tonnes U metal	7,911 tonnes U metal	-	10,200 tonnes U metal	CANDU fuel
Cernavoda NPP Units 3&4	HLW	-	10,200 tonnes U metal	-	10,200 tonnes U metal	CANDU fuel
RATEN ICN	HLW	0.001 tonnes U metal 0.055 tonnes U metal	0.35 tonnes U metal 0.15 tonnes U metal	- -	0.35 tonnes U metal 0.20 tonnes U metal	TRIGA LEU fuel CANDU fuel rods
Total quantity of spent fuel for geological disposal					**20,400 tonnes U metal**	

LILW-LL						
Cernavoda NPP Units 1&2	LILW-LL	-	450 m^3 Cond.	580 m^3 Cond.	1,030 m^3 Cond.	Operational, refurbishment and decommissioning wastes
Cernavoda NPP Units 3&4	LILW-LL	-	450 m^3 Cond.	580 m^3 Cond.	1,030 m^3 Cond.	Operational, refurbishment and decommissioning wastes
RATEN ICN	LILW-LL	0.5 m^3 Raw	5 m^3 Cond.	100 m^3 Cond.	105 m^3 Cond.	Institutional and decommissioning wastes
IFIN-HH	LILW-LL	4 m^3 Raw	10 m^3 Cond.	60 m^3 Cond.	70 m^3 Cond.	Institutional and decommissioning wastes
Total quantity of LILW-LL for geological disposal					**2,235 m^3 Cond.**	

LILW-SL						
Cernavoda NPP Units 1&2	LILW-SL	650 m^3 Raw	7,000 m^3 Cond.	7,100 m^3 Cond.	14,700 m^3 Cond.	Operational, refurbishment and decommissioning wastes
Cernavoda NPP Units 3&4	LILW-SL	-	7,650 m^3 Cond.	7,100 m^3 Cond.	14,700 m^3 Cond.	Operational, refurbishment and decommissioning wastes
Total quantity of operational LILW-SL for disposal at DFDSMA					**29,500 m^3 Cond.**	

IFIN-HH/ RATEN ICN	LILW-SL	22 m^3 Cond.	78 m^3/year Raw	1,900 m^3 Cond.	2,870 m^3 Cond.	Institutional & Decommissioning waste
Baita Bihor Repository	LILW-SL	2,130 m^3 Disposed			5,000 m^3 total capacity	Institutional & Decommissioning waste
Total quantity of institutional LILW-SL for disposal at Baita Bihor repository					**2,870 m^3 Cond.**	